J101.11/3 - 3810-290-34P

TECHNICAL MANUAL

DIRECT SUPPORT AND GENERAL SUPPORT REPAIR PARTS AND SPECIAL TOOLS LISTS (INCLUDING DEPOT MAINTENANCE REPAIR PARTS AND SPECIAL TOOLS LISTS)

CRANE, WHEEL MOUNTED: 5 TON AT 10 FOOT RADIUS, 3/8 CU YD, DIESEL ENGINE DRIVEN, 4×4 ROUGH TERRAIN AIR TRANSPORTABLE (HANSON MACHINERY CO. MODEL H446A)

FSN 3810-859-2404

RETURN TO

This copy is a reprint which includes current pages from Changes 1 and 2.

HEADQUARTERS, DEPARTMENT OF THE AR

DECEMBER 1971

CHANGE No. 2

HEADQUARTERS
DEPARTMENT OF THE ARM
WASHINGTON, DC *31 July 1981*

Direct Support and General Support Repair Parts and Special Tools List (Including Depot Maintenance Repair Parts and Special Tools List) CRANE, WHEEL MOUNTED; 5-TON AT 10 FOOT RADIUS, 3/8 CU YD, DIESEL ENGINE DRIVEN, 4x4 ROUGH TERRAIN AIR TRANSPORTABLE (HANSON MACHINERY CO. MODEL H446A) NSN 3810-00-859-2404

Current as of 28 May 1981

TM 5-3810-290-34P, 7 December 1971, is changed as follows:

Page v, before paragraph 3*a* add the following note:

NOTE

Two types of SMR codes are used in this manual. An explanation of the latest SMR coding is given in paragraph 3*a*.1.

Page vi, paragraph 3*a*. Subparagraph *a*.1 is added as follows:

a.1. *Explanation of Source, Maintenance, and Recoverability Codes (SMR).*

(1) *Source code.* Source codes indicate the manner of acquiring support items for maintenance, repair, or overhaul of end items. Source codes are entered in the first and second positions of the Uniform SMR Code format as follows:

Code	*Definition*
PA	Item procured and stocked for anticipated or known usage
PB	Item procured and stocked for insurance purpose because essentiality dictates that a minimum quantity by available in the supply system.
PC	Item procured and stocked and which otherwise would be coded PA except that it is deteriorative in nature.
PD	Support item, excluding support equipment, procured for initial issue or outfitting and stocked only for subsequent or additional initial issues or outfittings. Not subject to automatic replenishment.
PE	Support equipment procured and stocked for initial issue or outfitting to specified maintenance repair activities.
PF	Support equipment which will not be stocked but which will be centrally procured on demand.
PG	Item procured and stocked to provide for sustained support for the life of the equipment. It is applied to an item peculiar to the equipment which, because of probable dis-
	continuance or shutdown of production facilities, wo prove uneconomical to reproduce at a later time.
KD	An item of a depot overhaul/repair kit and not purcha separately. Depot kit defined as a kit that provides ite required at the time of overhaul or repair.
KF	An item of a maintenance kit and not purchased separat Maintenance kit defined as a kit that provides an it that can be replaced at organizational or intermediate vels of maintenance.
KB	Item included in both a depot overhaul/repair kit and a m tenance kit.
MO	Item to be manufactured or fabricated at organizatio level.
MF	Item to be manufactured or fabricated at direct supp maintenance level.
MH	Item to be manufactured or fabricated at the gene support maintenance level.
MD	Item to be manufactured or fabricated at the depot m tenance level.
AO	Item to be assembled at organizational level.
AF	Item to be assembled at direct support maintenance le
AH	Item to be assembled at general support maintena level.
XA	Item is not procured or stocked because the requireme for the item will result in the replacement of the n higher assembly.
XB	Item is not procured or stocked. If not available thro salvage, requisition.
XC	Installation drawing, diagram, instruction sheet, field vice drawing, that is identified by manufacturer's number.
XD	A support item that is not stocked. When required, i will be procured through normal supply channels.

NOTE

Cannibalization or salvage may be used as a source of supply for any items coded above except those coded XA and aircraft support items restricted by AR 700-42.

(2) *Maintenance code.* Maintenance codes are signed to indicate the levels of maintenance authori

to USE and REPAIR support items. The maintenance codes are entered in the third and fourth positions of the Uniform SMR Code format as follows:

(a) The maintenance code entered in the third position will indicate the lowest maintenance level authorized to remove, replace, and use the support item. The maintenance code entered in the third position will indicate one of the following levels of maintenance:

Code	*Application/Explanation*
C	Crew or operator maintenance performed within organizational maintenance.
O	Support item is removed, replaced, used at the organizational level.
F	Support item is removed, replaced, used at the direct support level.
H	Support item is removed, replaced, used at the general support level.
D	Support items that are removed, replaced, used at depot, mobile depot, or specialized repair activity only.

(b) The maintenance code entered in the fourth position indicates whether the item is to be repaired and identifies the lowest maintenance level with the capability to perform complete repair (i.e, all authorized maintenance functions). This position will contain one of the following codes:

O	The lowest maintenance level capable of complete repair of the support item is the organizational level.
F	The lowest maintenance level capable of complete repair of the support item is the direct support level.
H	The lowest maintenance level capable of complete repair of the support item is the general support level.
D	The lowest maintenance level capable of complete repair of the support item is the depot level.
Z	Nonrepairable. No repair is authorized.
B	No repair is authorized. The item must be reconditioned by adjusting, lubricating, etc., at the user level. No parts or special tools are procured for the maintenance of this item.

(3) *Recoverability code.* Recoverability codes are assigned to support items to indicate the disposition action on unserviceable items. The recoverability code is entered in the fifth position of the Uniform SMR Code format as follows:

Recoverability Codes	*Definition*
Z	Nonrepairable item. When unserviceable, condemn and dispose at the level indicated in position 3.
O	Repairable item. When uneconomically repairable, condemn and dispose at the organizational level.
F	Repairable item. When uneconomically repairable, condemn and dispose at the direct support level.
H	Repairable item. When uneconomically repairable, condemn and dispose at the general support level.
D	Repairable item. When beyond lower level repair capability, return to depot. Condemnation and disposal not authorized below depot level.
A	Item requires special handling or condemnation procedures because of specific reasons (i.e., precious metal content, high dollar value, critical material or hazardous material). Refer to appropriate manuals/directives for specific instructions.

6. Reporting Errors and Recommending Improvements.

You can help improve this manual. If you find any mistakes or if you know of a way to improve the procedures, please let us know. Mail your letter or DA Form 2028 (Recommended Changes to Publications and Blank Forms) direct to: Commander, US Army Tank-Automotive Command, ATTN: DRSTA-MB, Warren, MI 48090. A reply will be furnished direct to you.

Page 3, figure 3, item 33, column (2). Change "5306-465-6331" to "5360-00-465-6331".

Page 11, figure 6, item 1, column (2). Add "5305-00-759-6357".

Page 23, figure 14, line 25, CYLINDER, HYDLIC, column (3). Change "H1614C (30014)" to "18810 (13841)".

Page 47, figure 40.

Item 1, column (3). Delete "20232 (13841)".

Line 16, CABLE, WIRE ROPE.

Column (2). Add "4010-00-269-9308".

Column (3). Change "CABLE, WIRE ROPE, 1/2 IN. DIA, 206 FT LG, 20232 (27186)" to "ROPE, WIRE 1/2 IN. DIA, 240 FT LG 3F5597 (11083)".

Page 57, figure 47, item 3, column (2). Change "5305-765-3786" to "5305-00-709-8540".

Page 66, figure 55, item 1, column (2). Change "5340-461-8073" to "5340-461-6073". ".

Page 83, figure 67, item 27, column (3). Change "UXB4577 (61208)" to "34359 (13841)".

Page 86, figure 69.

Item 1. Delete entire line.

Item 2. column (3). Change "Cone, Bearing 30307AJP (61208)" to "Bearing 34351 (13841)".

Page 87, figure 70, item 18, column (3). Change "UC1451 (61208)" to "34195 (13841)".

Page 134, figure 112, item 58, column (2). Change "4730-196-0821" to "4730-00-196-0861".

Page 136, figure 113, item 29, column (2). Change "4730-196-0821" to a"4730-00-196-0861".

Page 144.

Line 21.1.

Column (10)(a). Add "120".

Column (10)(b). Add "3.1".

Line 21.2

Column (5). Change "1" to "4".

Column (10)(a). Add "120".

Column (10)(b). Add "3.2".

Line 21.3.

Column (1). Change "PO" to "XDOZZ".

Column (3). Change "WASHER 30825 (13841)" to "BRACKET MTG Plate P/N 17262 (13841)".

Column (6). Delete "******".

Column (7). Delete "******".

Column (9). Delete "6".

Column (10)(a). Add "120".
Column (10)(b). Add "3.3".

Line 21.4.
Column (5). Change "1" to "2".
Column (10)(a). Add "120".
Column (10)(b). Add "3.4".

Line 21.5.
Column (5). Change "1" to "2".
Column (10)(a). Add "120".
Column (10)(b). Add "3.5".

Line 21.6.
Column (5). Change "2" to "4".
Column (10)(a). Add "120".
Column (10)(b). Add "3.6".

Page 149, figure 124, item 11, column (2). Change "6680-515-3472" to "6680-00-933-3599".

Page 150, line 21, column (2). Delete "2590-430-7535".

Page 160, figure 131, item 18, column (2). Change "5305-296-0261" to "5305-00-926-0261".

Page 169, figure 139, item 1, column (2). Change "2540-333-3560" to "2540-00-433-3560".

Page 182, figure 147, item 27, column (2). Change "9505-445-6886" to "9505-00-445-6786".

Page 189, figure 150, item 77, column (2). Change "5310-434-1546" to "5310-00-220-6787".

Page 190, figure 151, line 6, TIRE.
Column (2). Add "2610-00-580-3187".
Column (3). Change "TIRE" to "TIRE, TUB
LESS, 23.5 X 25, 12 PLY ZZT001083 (81348)".

Page 191, figure 152, item 18, column (2). Chang
"5360-255-6905" to "5360-00-255-6907".

Page 193, figure 154, item 4, column (2). Chang
"2805-595-1966" to "2805-00-593-1966".

Page 194, figure 154.
Item 13, column (2). Change "3120-585-0817"
"3120-00-485-0817".
Item 27, column (2). Change "9505-445-6886"
"9505-00-445-6786".

Page 195, figure 154, item 35, column (2). Chang
"5310-821-0653" to "5310-00-820-6653".

Page 196, figure 155, item 20, column (2). Chang
"2530-434-4668" to "2530-00-434-4368".

Page 202, figure 157, item 77, column (2). Chang
"5310-434-1456" to "5310-00-220-6787".

Page 328, figure 119 is superseded as follows:

Page 329, figure 120 is superseded as follows:

All changes, additions, or deletions of stock numbers, manufacturers codes, and part numbers with this change should be approximately reflected in the index.

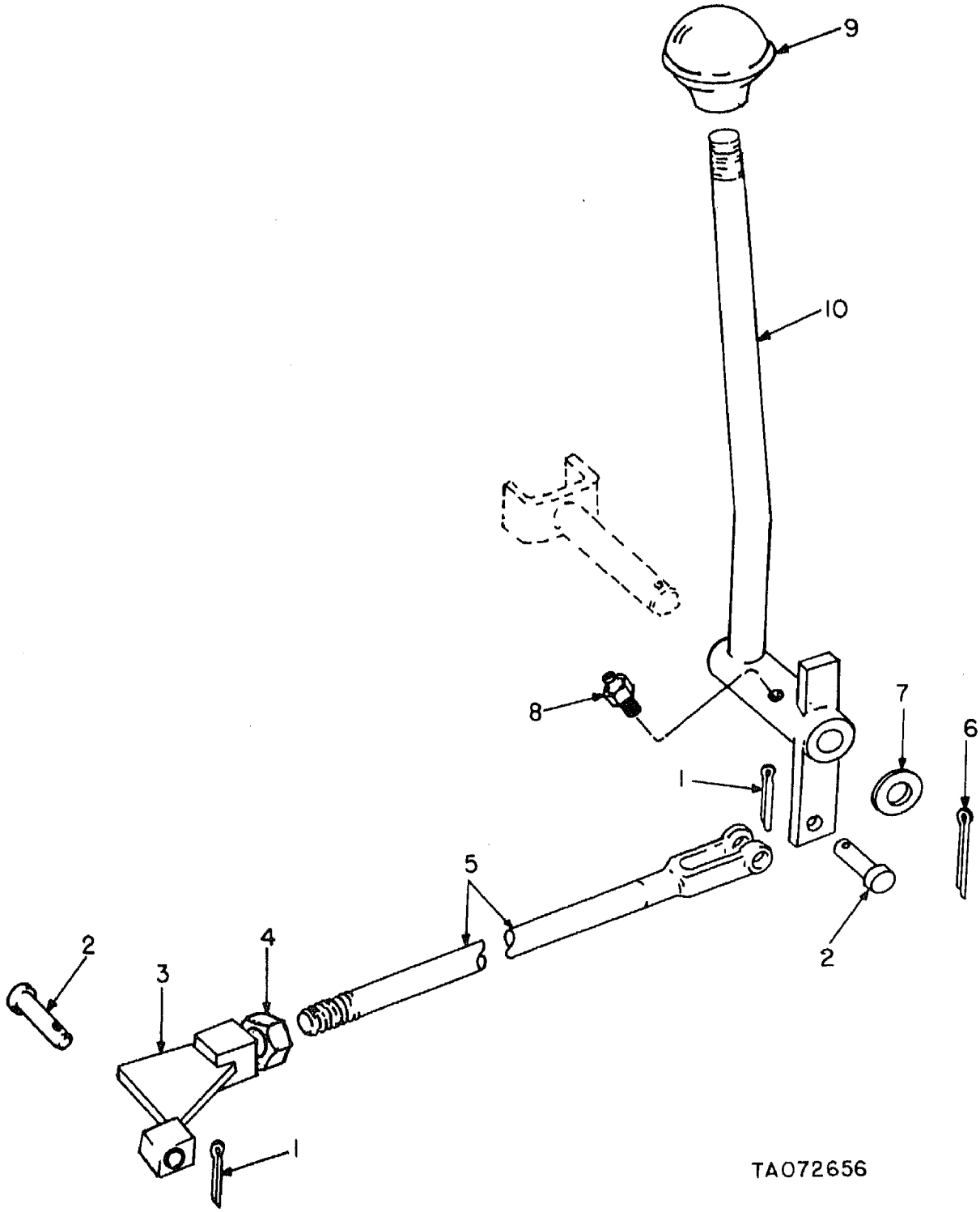

Figure 119. Transfer shift control.

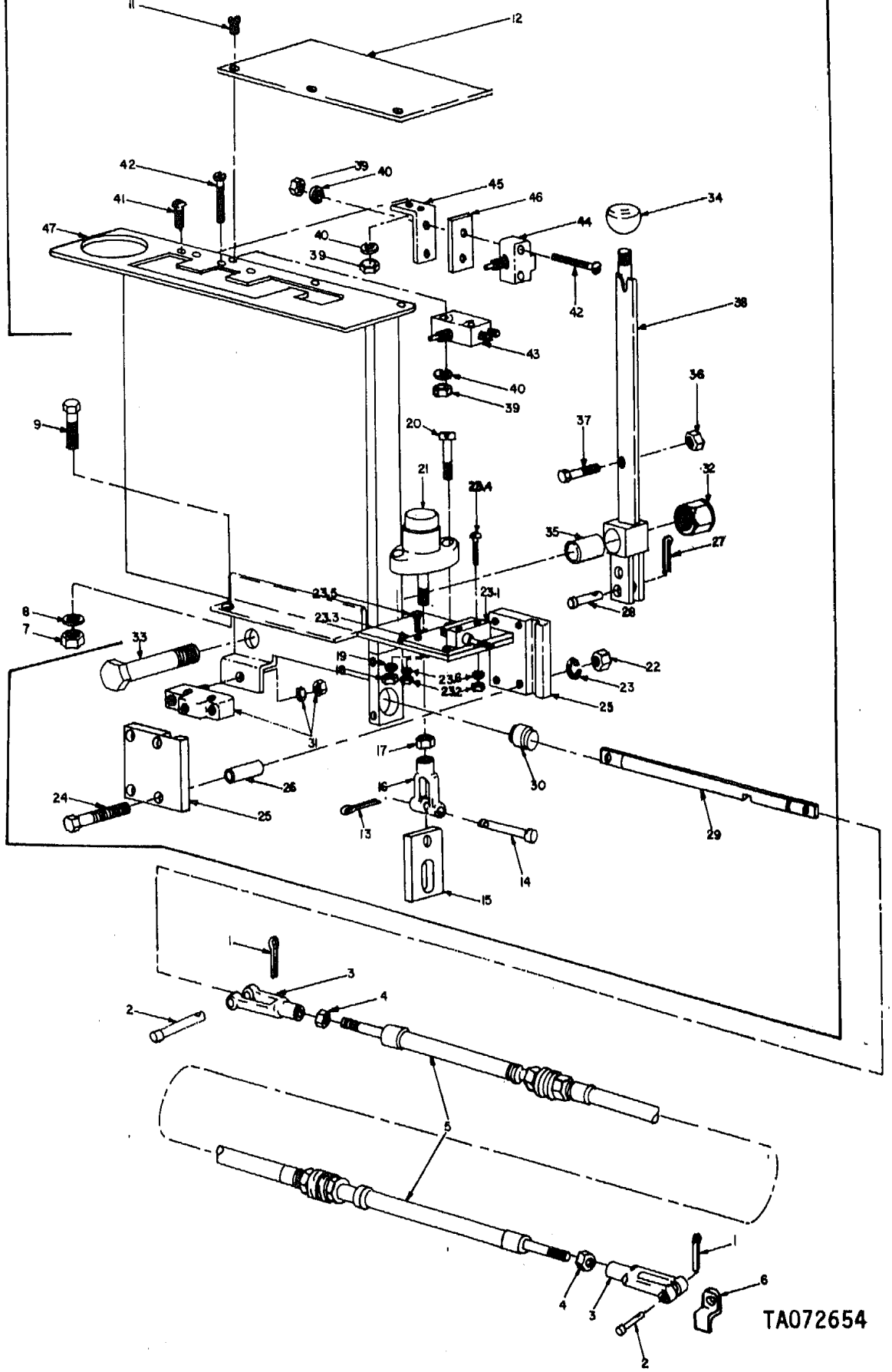

Figure 120. Transmission shift tower.

By Order of the Secretary of the Army:

E. C. MEYER
General, United States Army
Chief of Staff

Official:
ROBERT M. JOYCE
Brigadier General, United States Army
The Adjutant General

Distribution:
To be distributed in accordance with DA Form 12-25B, Direct and General Support maintenance requirements for Cranes Whell Mounted.

CHANGE NO. 1

HEADQUARTERS
DEPARTMENT OF THE ARMY
Washington, D.C., *17 January 1974*

Direct Support and General Support Repair Parts and Special Tools Lists (Including Depot Maintenance Repair Parts and Special Tools Lists) CRANE, WHEEL MOUNTED; 5-TON AT 10-FOOT RADIUS, 3/8 CU YD, DIESEL ENGINE DRIVEN, 4X4 ROUGH TERRAIN, AIR TRANSPORTABLE (HANSON MACHINERY CO. MODEL H446A) FSN 3810-859-2404

Current as of 29 October 1973

TM 5-3810-290-34P, 7 December 1971, is changed as follows:

NOTE

Lines (line item numbers) referenced in this change are determined by counting the SMR codes in column (1).

Page vii. Paragraph 6 is superseded as follows:

6. Reporting of Equipment Publication Improvements

The reporting of errors, omissions, and recommendations for improving this publication by the individual user is encouraged. Reports should be submitted on DA Form 2028 (Recommended Changes to Publications) and forwarded direct to Commander, US Army Troop Support Command, ATTN: AMSTS-MPP, 4300 Goodfellow Blvd., St. Louis, MO 63120.

Page 2. In line 6, column (2), "2540-412-4146" is added to part No. "78778-11NS."

In line 11, column (2), "5310-014-2247" is changed to "5310-465-6765."

In line 19, column (2), "2540-852-1215" is added to part No. "S2310-20."

In line 23, column (2), "5310-465-6750" is added to part No. "166604," and in column (3), part No. "164604" is changed to "2344."

Page 3. In line 2, column (2), "2540-409-0738" is added to part No. "F582."

In line 8, column (2); "2540-410-6864" is added to part No. "GF102-5."

In line 19, column (2), "4730-420-6196" is added to part No. "EX100-203."

In line 26, column (2), "5306-465-6331" is added to part No. "EX100-248."

Page 4. In line 1, column (2), "5315-465-6296" is added to part No. "F-319."

In line 4, column (2), "2540-420-7517" is added to part No. "S-1082-1."

In line 5, column (2), "5340-457-3663" is added to part No. "S658."

In line 7, column (2), "3020-412-3514" is added to part No. "F1058M."

Page 5. In line 7, column (2), "5305-769-2168" is added to part No. "4653."

In line 17, column (2), "5305-769-2067" is added to part No. "162306."

In line 19, column (2), "3810-410-6805" is added to part No. "330690."

In line 23, column (2), "5305-769-1916" is added to part No. "30494."

Page 6. Line 3, column (2), "5305-483-0525" is added to part No. "162135."

l line 6, column (2), "9390-485-2885" is added to
: No. "AS788AS789"; and in column (3), Part No.
S788AS789" is changed to "AS788."
n line 7, column (2), "9320-482-6979" is added to
t No. "194997."
n line 8, column (2), "9390-489-9526" is added to
t No. "204445."
n line 13, column (2), "9390-485-2885" is added to
rt No. "AS788AS789;" and column (3),
S788AS789" is changed to "AS788."
n line 20, column (2), "2510-430-7391" is added to
rt No. "A4264."
ge 7. In line 1, column (2), "5310-465-6775" is added
part No. "6961."
In line 2, column (2), "5310-465-6750" is added to
rt No. "164604," and column (3), part No. "164604"
changed to "2344."
In line 3, column (2), "5305-769-2075" is added to
rt No. "161515."
In line 4, column (2), "2540-412-4145" is added to
rt No. "3719."
In line 7, column (2), "5310-465-6159" is added to
rt No. "6131."
In line 10, column (2), "5310-465-6775" is added to
rt No. "6961."
In line 11, column (2),"5310-465-6750" is added to
rt No. "164604;" and column (3), part No. "164604"
changed to "2344."
In line 12, column (2), "5305-769-2075" is added to
rt No. "161515."
In line 16, column (2), "5305-769-1894" is added to
rt No. "160515."
In line 17, column (2), "5310-465-6750" is added to
rt No. "164604;" and column (3), part No. "164604"
changed to "2344."
age 8. In line 1, column (2), "2540-433-3563" is added
part No. "8576016."
In line 2, column (2), "5305-580-0827" is added to
rt No. "1770290."
In line 5, column (2), "5305-759-6358" is added to
rt No. "1770005."
In line 7, column (2), "2540-410-6703" is added to
rt No. "2159361."
In line 8, column (2), "2540-410-6704" is added to
rt No. "2161601."
In line 10, column (2), "5310-480-4472" is added to
rt No. "1770091."
In line 11, column (2), "5310-465-6804" is added to
rt No. "1770072."
In line 18, column (2), "5315-465-6851" is added to
rt No. "2157813."
In line 19, column (2), "5306-824-1246" is added to
rt No. "2147533."
In line 20, column (2), "5310-438-8265" is added to
rt No. "2147543."
In line 21, column (2), "5360-498-6492" is added to
part No. "2147553."
In line 23, column (2), "5360-765-2028" is added to
part No. "2157853."
Page 9. In line 3, column (2), "5310-480-4467" is added
to part No. "1770178."
In line 4, column (2), "5305-769-1930" is added to
part No. "1770039."
In line 6, column (2), "2540-444-0022" is added to
part No. "610495."
In line 7, column (2), "3120-763-0176" is added to
part No. "2112253."
In line 8, column (2), "5305-769-2206" is added to
part No. "1770040."
In line 11, column (2), "5310-763-0278" is added to
part No. "2123411."
In line 12, column (2), "2540-410-6711" is added to
part No. "GYRL400."
In line 13, column (2), "5340-465-6013" is added to
part No. "2123423."
In line 14, column (2), "4720-436-7760" is added to
part No. "2113863."
In line 17, column (2), "5315-465-6361" is added to
part No. "1770108."
In line 18, column (2), "3120-763-0173" is added to
part No. "2123393."
Page 10. In line 4, column (2), "4730-420-6195" is added
to part No. "4-1-1."
Page 10. In line 5, column (2), "2590-412-3882" is added
to part No. "64-032-473."
In line 7, column (2), "2910-496-5782" is added to
part No. "CR134-5-45."
In line 11, column (2), "5310-480-2385" is added to
part No. "1911."
In line 13, column (2), "5310-480-4287" is added to
part No. "4217."
In line 14, column (2), "5310-465-6775" is added to
part No. "6961."
In line 17, column (2), "9390-491-7724" is added to
part No. "201902."
In line 20, column (2), "5305-769-2075" is added to
part No. "161515."
In line 24, column (2), "4710-410-6681" is added to
part No. "134158."
In line 25, column (2), "4820-412-3511" is added to
part No. "H1218."
In line 26, column (2), "5310-465-6159" is added to
part No. "6131."
Page 11. In line 2, column (2), "5310-465-6750" is added
to part No. "164604;" and column (3), part No.
"164604" is changed to "2344."
In line 4, column (2), "5305-759-6367" is added to
part No. "1349."
In line 17, column (2), "5305-769-2218" is added to
part No. "3994."

changed to "5310-465-6210."

Page 23. In line 20, column (2), "3040-756-0891" is changed to "3810-018-2047;" and column (3), "20246 (13841)" is changed to "13219E2047 (97403)."

In line 21, column (2), "5340-720-0759" is changed to "3810-018-2032;" and column (3), "20257 (13841)" is changed to "13219E3555 (97403)."

Page 51. In line 22, column (2), "5305-269-3213" is changed to "5305-769-1829."

Page 53. In line 17, column (2), "5305-769-2067" is added to part No. "162306."

Page 54. In line 13, immediately after line 13, "3040-404-6943," the following parts are added, and indented as components of "52088D (29783)," "ROTARY SEAL JOINT."

Line 13.1: Column (1), "PF;" column (2), "5305-983-6621;" column (3), "SCREW, INTERNAL, 5/16 NC x 1 in. long, "MS16997-80 (96906);" column (4), "EA;" column (5), qty "4;" columns (6) and (7), "******;" columns (8) and (9), "3;" and column (10), fig. 43.1, item 1.

Line 13.2: Column (1), "X1F;" column (2), blank; column (3), "PLATE COVER, 5208E (29783);" column (4), "EA;" column (5), qty "1;" columns (6) through (9), blank; and column (10), fig. 43.1, item 2.

Line 13.3: Column (1), "PF;" column (2), blank; column (3), "PACKING, PREFORMED, 2-222N219-7 (29783);" column (4), "EA;" column (5), qty "1;" columns (6) and (7), "******;" columns (8) and (9), "3;" and column (10), fig. 43.1, item 3.

Line 13.4: Column (1), "X1F;" column (2), blank; column (3), "HOUSING, 5208F (29783);" column (4), "EA;" column (5), Qty "1;" columns (6) through (9), blank; and column (10), fig. 43.1, item 4.

Line 13.5: Column (1), "PF;" column (2), "5305-978-9379;" column (3), "SCREW, INTERNAL HEX HEAD, 1/4 NC x 5/8 in. long, MS16997-60 (96906); column (4), "EA;" column (5), qty "6;" columns (6) and (7), "******;" columns (8) and (9), qty "3;" and column (10), fig. 43.1, item 5.

Line 13.6: Column (1), "X1F;" column (2), blank; column (3), "RING, RETAINING, 5208H (29783);" column (4), "EA;" column (5), qty "1;" columns (6) through (9), blank; and column (10), fig. 43.1, item 6.

Line 13.7: Column (1), "PF;" column (2), blank; column (3), "BEARING, BALL, BOTTOM, KA65CP (29783);" column (4), "EA"; column (5), qty "1;" columns (6) and (7), blank; columns (8) and (9), qty "3;" and column (10), fig. 43.1, item 7.

Line 13.8, column (1), "X1F;" column (2), blank; column (3), "SPOOL ASSEMBLY, 5208G (29783);" column (4), "EA;" column (5), qty "1;" columns (6) through (9), blank; and column (10), fig. 43.1, item 8.

Line 13.9, column (1), "PF;" column (2), blank; (29783);" column (4), "EA"; column (5), qty "9;" columns (6) and (7), "******;" columns (8) and (9), "3;" and column (10), fig. 43.1, item 9.

Line 13.10, column (1), "PF;" column (2), blank; column (3), "SEAL, TEFLON, UPC29005-363 (29783);" column (4), "EA;" column (5), qty "9;" columns (6) and (7), "******;" columns (8) and (9), qty "3;" and column (10), fig. 43.1, item 10.

Line 13.11, column (1), "PF;" column (2), blank; column (3), "BEARING, BALL, KC60CP (29783);" column (4), "EA;" column (5), qty "1;" columns (6) and (7), "******;" columns (8) and (9), qty "3;" and column (10), fig. 43.1, item 11.

Page 56. In line 5, column (2), "2990-417-2857" is added to part No. "334096."

In line 7, column (2), "2990-417-2612" is added to part No. "331284."

In line 8, column (2), "2990-436-8284" is added to part No. "08680."

In line 9, column (2), "2990-417-2595" is added to part No. "331266."

In line 10, column (3), "2990-417-2878" is added to part No. "331267."

In line 11, column (2), "4730-289-1643" is added to part No. "36666."

In line 15, column (2), "2990-420-7520" is added to part No. "332011."

In line 16, column (2), "2990-417-1607" is added to part No. "332012."

Page 57. In line 8, column (2), "2940-412-4025" is added to part No. "331427."

In line 11, column (2), "5305-765-3786" is added to part No. "165285."

In line 12, column (2), "2940-420-7303" is added to part No. "AAHOO-0350."

In line 15, column (2), "2940-420-7515" is added to part No. "SBG14-0041."

Page 58. In line 18, column (2), "5310-014-2247" is changed to "5310-465-6765."

In line 24, column (2), "2910-444-0164" is added to part No. "LP2215-10."

In line 26, column (2), "2920-869-3434" is added to part No. "LP1779-1."

In line 27, column (2), "4810-410-6740" is added to part No. "LP3483-9."

Page 59. In lines 1, 7, 16 and 19, column (2) "5310-014-2247" is changed to "5310-465-6765."

Page 60. In line 3, column (2), "5310-465-6771" is added to part No. "190502."

In line 12, column (2), "5310-465-6775" is added to part No. "6961."

In line 13, column (2), "5310-465-6750" is added to part No. "164604;" and column (3), "164604" is changed to "2344."

In line 15, column (2), "5310-014-2247" is changed to "5310-465-6765."

In line 18, column (2), "5340-457-5826" is added to part No. "750009."

In line 19, column (2), "2510-410-6739" is added to part No. "750506."

Page 61. In line 2, column (2), "5310-014-2247" is changed to "5310-465-6765."

In line 4, column (2), "5310-465-6827" is added to part No. "6487."

In line 8, column (2), "5310-014-2247" is changed to "5310-465-6765."

In line 21, column (2), "4820-140-3777" is added to part No. "85830."

In line 24, column (2), "2930-420-7600" is added to part No. "310100."

Page 62. In line 2, column (2), "2930-420-7516" is added to part No. "310500."

In line 3, column (2), "5360-465-5931" is added to part No. "310109."

In line 6, column (2), "5330-457-6106" is added to part No. "310517."

In line 10, column (2), "4720-412-3518" is added to part No. "64601."

In line 11, column (2), "4720-412-3518" is added to part No. "64601."

In line 21, immediately after line 21, "TUBE, 64480" the following parts are added:

Line 21.1: Column (1), "PO;" column (2), blank; column (3), "HOSE, RUBBER, 3/8 I.D. x 24 in. long, 657964 (39215);" column (4), "EA;" column (5), qty "1;" columns (6) and (7), "******;" columns (8) and (9), qty "6;" and column (10), blank.

Line 21.2: Column (1), "PO;" column (2), blank; column (3), "CLAMP, HOSE, 657965 (39215);" column (4), "EA;" column (5), qty "2;" columns (6) and (7), "******;" columns (8) and (9), qty "6;" and column (10), blank.

Line 21.3: Column (1), "PO;" column (2), blank; column (3), "HOSE, RUBBER, 1 in. I.D. x 45 in. long, 657967 (39215);" column (4), "EA;" column (5), qty "1;" columns (6) and (7), "******;" columns (8) and (9), qty "6;" and column (10), blank.

Line 21.4: Column (1), "PO;" column (2), blank; column (3), "CLAMP, HOSE, 657968 (39215);" column (4), "EA;" column (5), qty "2;" columns (6) and (7), "******;" columns (8) and (9), qty "6;" and column (10), blank.

Line 21.5: Column (1), "PO;" column (2), blank; column (3), "HOSE, OUTLET, 657969 (39215);" column (4), "EA;" column (5), qty "1;" columns (6) and (7), "******;" columns (8) and (9), qty "6;" and column (10), blank.

Line 21.6: Column (1), "PO;"column (2), blank; column (3), "CLAMP, HOSE, 657936 (39215);" column "******;" columns (8) and (9), qty "6;" and column (10), blank.

Line 21.7: Column (1), "X20;" column (2), blank; column (3), "ADAPTER, MALE, 657963 (39215);" column (4), "EA;" column (5), qty "1;" columns (6) through (10), blank.

Page 63. In line 1, column (2), "5310-465-6294" is added to part No. "164604."

In line 2, column (2), "2930-412-3982" is added to part No. "330697."

In line 3, column (2), "5310-465-6775" is added to part No. "6961."

In line 4, column (2), "5305-769-2248" is added to part No. "162136."

Immediately after line 4, "Part No. 162136," the following lines are added:

Line 4.1: Column (1), "PO;" column (2), blank; column (3), "SCREW, SHROUD, 34654 (39215);" column (4), "EA;" column (5), Qty "6;" columns (6) and (7), "******;" columns (8) and (9), qty "6;" and column (10), blank.

Line 4.2: Column (1), "PO;" column (2), blank; column (3), "WASHER, LOCK, 10Z45 (39215);" column (4), "EA;" column (5), qty "8;" columns (6) and (7), "******;" columns (8) and (9), qty "6;" and column (10), blank.

Line 4.3: Column (1), "PO;" column (2), blank; column (3), "NUT, HEX, 1399 (39215);" column (4), "EA;" column (5), qty "8;" columns (6) and (7), "******;" columns (8) and (9), qty "6;" and column (10), blank.

In line 6, column (2), "5310-732-0559" is changed to "5310-959-1488;" and column (3), "NUT, PLAIN" is changed to "NUT, ELASTIC STOP, FIBER INSERT;" and part No. "MS51908-8" is changed to "MS51922-21."

In line 7, column (2), "5310-018-7123" is changed to "5310-080-6004;" column (3), "WASHER, LOCK" is changed to "WASHER, FLAT;" and part No. "4313 (23382)" is changed to "MS27183-14 (96906)."

In line 8, column (2), "5305-269-2803" is changed to "5305-269-2805;" column (3), "3/8-24 x 1 in." is changed to "3/8-24 x 1 1/4 in.;" and "MS90726-60" is changed to "MS90726-62."

In line 11, column (2), "5305-715-0971" is added to Part No. "5864."

In line 15, column (2), "2930-410-6692" is added to part No. "R8421;" and "R8421 (46529)" is changed to "DG657900 (39215)."

In line 20, column (3), "HOSE, RUBBER: OVERFLOW DRAIN" is changed to "HOSE, RUBBER, VENT TUBE, 45 in. long;" and "G62832" is changed to "551307."

In line 21, column (2), "4730-430-5146" is added to part No. "G2137."

to part No. "A1-2925."

In line 4, column (2), "2930-410-6669" is added to part No. "A2-2702."

In line 8, column (2), "2930-412-4031" is added to part No. "T-2061."

In line 14, column (2), "4720-412-3522" is added to part No. "134191."

In line 15, column (2), "4720-430-6181" is added to part No. "134192."

In line 16, column (2), "4720-430-5562" is added to part No. "134193."

In line 17, column (2), "4720-412-3538" is added to part No. "138127."

In line 19, column (2), "4820-455-8645" is added to part No. "10001507."

In line 22, column (2), "4730-278-4240" is added to part No. "6515."

Page 65. In line 2, column (2), "4730-647-3207" is added to part No. "8-4CTXS."

In line 4, column (2), "2990-420-7535" is added to part No. "10100181."

In line 11, column (2), "5310-465-6774" is added to part No. "84."

In line 12, column (2), "5310-465-6132" is added to part No. "86."

In line 18, column (2), "5330-465-5828" is added to part No. "361."

In line 19, column (2), "2910-444-0171" is added to part No. "EX678."

Page 66. In line 1, column (2), "5340-461-8073" is added to part No. "202444."

In line 7, column (2), "4720-410-5861" is added to part No. "138093."

In line 10, column (2), "4720-412-3523" is added to part No. "134188."

In line 12, column (2), "4720-410-5862" is added to part No. "138277."

In line 13, column (2), "4720-412-3522" is added to part No. "134191."

In line 16, column (2), "4710-410-6701" is added to part No. "197698."

In line 18, column (2), "4730-818-2467" is changed to "4710-410-6697."

In line 22, column (2), "4710-433-3596" is added to part No. "138275."

Page 67. In line 1, column (2), "5330-804-5694" is added to part No. "3-16-145-140."

In line 5, column (2), "4730-196-2058" is added to part No. "7435."

In line 14, column (2), "4730-853-1182" is added to part No. "8F50XF."

In line 20, column (2), "4730-460-1800" is added to part No. "719FS01-2X1-4."

In line 23, column (2), "2520-420-6335" is added to (92683)" is changed to "OF9B25AC (77521)."

Page 68. In line 1, column (1), "PO" is changed to "X20;" and column (3) is changed from "SCREW CAP, 851160-15 (92863)" to "BOLT, CAN TO BASE, 493183 (77521)."

In line 3, column (2), "5330-476-5523" is added to part No. "851160-4."

In line 6, column (2), "2520-420-6461" is added to part No. "9549235228."

In line 8, column (2), "2520-420-6459" is added to part No. "156736."

In line 11, column (2), "2520-420-6460" is added to part No. "CP68WB67."

Page 69. In line 3, column (2), "2520-420-6466" is added to part No. "72NYS32-111X."

In line 5, column (2), "2520-455-8476" is added to part No. "72NYS24-13X;" and column (3), "72NYS24-13X" is changed to "72NY524-13X."

In line 13, column (2), "5365-804-7304" is added to part No. "5000-334."

Page 70. In line 15, column (2), "5305-580-0911" is added to part No. "4002."

In line 20, column (2), "5310-445-4709" is added to part No. "754447."

Page 72. In line 4, column (2), "5310-438-8509" is added to part No. "52E80."

In line 10, column (2), "3020-436-7840" is added to part No. "125292."

In line 14, column (2), "2520-436-7846" is added to part No. "125654."

In line 16, column (2), "3020-436-7840" is added to part No. "125292."

In line 19, column (2), "3020-433-3418" is added to part No. "804333."

In line 21, column (2), "2520-482-4027" is added to part No. "804850."

In line 22, column (3), "GOVERNOR, TRANSFER CASE, 4621 (02129)" is changed to "SWITCH, SPEED SENSING, 2SD2-50AA ((4464)."

Page 73. In line 15, column (2), "3020-412-3764" is added to part No. "805216."

In line 16, column (2), "3020-412-3766" is added to part No. "804857."

In line 17, column (2), "3020-412-3767" is added to part No. "805217."

In line 18, column (2), "5315-486-7765" is added to part No. "804813."

In line 19, column (2), "2520-430-5296" is added to part No. "804809."

Page 74. In line 3, column (2), "5305-487-4657" is added to part No. "165178."

In line 7, column (2), "3020-460-2085" is added to part No. "805087."

In line 18, column (2), "3040-412-3985" is added to part No. "805226."

In line 20, column (2), "2520-420-6469" is added to part No. "804759."

Page 75. In line 3, column (2), "5310-476-5541" is added to part No. "2390."

In line 5, column (2), "3110-142-6040" is added to part No. "171042."

In line 9, column (2), "5310-014-2247" is changed to "5310-465-6765."

Page 79. In line 5, column (2), "4730-196-2059" is added to part No. "7446."

In line 6, column (2), "4730-246-9189" is added to part No. "2037."

In line 8, column (2), "4730-249-3919" is added to part No. "7434."

In line 9, column (2), "4730-196-2059" is added to part No. 7446."

Page 88. In line 19, column (2), "3020-433-3234" is added to part No. "330643."

In line 21, column (2), "5310-480-4287" is added to part No. "4217."

Page 89. In line 1, column (2), "5305-480-4540" is added to part No. "5856."

Page 95. In line 12, column (2), "4720-412-3522" is added to part No. "134191."

In line 17, column (2), "4730-277-1840" is added to part No. "6567."

Page 99. In line 19, column (2), "2930-477-3436" is deleted; and column (3), "5173871" is changed to "51000183."

Page 104. In line 2, column (2), "4720-412-3807" is added to part No. "5109116."

In line 4, column (2), "4720-430-5192" is added to part No. "5133775."

In line 17, column (2), "4730-125-7979" is added to Part No. "444136."

Page 132. In line 4, column (2), "4730-196-2055" is added to part No. "3957."

In line 7, column (2), "4720-412-3534" is added to part No. "134190."

In line 11, column (2), "4730-145-4215" is added to part No. "10000472."

In line 17, column (2), "4730-412-3814" is added to part No. "2038-4-8."

In line 19, column (2), "4730-278-4240" is added to part No. "6515."

Page 133. In line 2, column (2), "4710-433-3623" is added to part No. "197693."

Page 134. In line 4, column (2), "4730-196-2055" is added to part No. "3957."

In line 8, column (2), "4820-433-3424" is added to part No. "278824."

In line 22, column (2), "4730-196-0821" is added to part No. "6577."

Page 135. In line 7, column (2), "4710-410-6761" is added to part No. "138094."

In line 10, column (2), "4720-410-5861" is added to part No. "138093."

In line 11, column (2), "4720-430-6264" is added to part No. "138091."

In line 15, column (2), "4730-412-3814" is added to part No. "2038-4-8."

In line 19, column (2), "4730-278-4240" is added to part No. "6515."

Page 136. In line 5, column (2), "4730-196-0840" is added to part No. "7425."

In line 6, column (2), "4730-196-2055" is added to part No. "3957."

In line 14, column (2), "4730-196-0821" is added to part No. "6577."

Page 137. In line 2, column (2), "4730-808-6840" is added to part No. "4FTX."

In line 3, column (2), "4720-430-6263" is added to part No. "134170."

In line 17, column (2), "4730-196-2055" is added to part No. "3957."

Page 138. In line 14, column (2), "4730-352-6616" is added to part No. "6572."

In line 16, column (2), "4730-932-1129" is added to part No. "4GTX."

In line 20, column (2), "4730-352-6616" is added to part No. "6572."

Page 139. In line 5, column (2), "4730-265-6905" is added to part No. "3425."

Immediately after line 6, "COUPLING DUMMY: AIR CONNECTING," following item is added:

In line 6.1: Column (1), "PO;" column (2), "2530-270-3878;" column (3), "COUPLING, DUMMY, 7014965 (00000);" column (4), "EA;" column (5), qty "1;" columns (6) and (7), "******;" columns (8) and (9), qty "6;" and column (10), blank.

In line 19, column (2), "2530-430-5305" is added to part No. "275791."

Page 140. In line 10, column (2), "4820-420-6194" is added to part No. "281925."

In line 20, column (2), "2530-412-3813" is added to part No. "226503."

In line 21, column (2), "4820-412-3525" is added to part No. "281924."

In line 22, column (2), "2530-430-5250" is added to part No. "281926."

Page 141. In line 12, column (2), "5305-282-4209" is changed to "5305-580-0910."

In line 13, column (2), "5310-531-0525" is changed to "5310-461-5994."

Page 142. In line 1, column (2), "2990-449-7391" is added to part No. "199463."

In line 7, column (2), "5930-420-0136" is added to part No. "87342."

In lines 10 and 14, column (2), "5310-465-6769" is added to part No. "10275060."

changed to "5310-465-6765."

In line 21, column (2), "5310-465-6827" is added to Part No. "6487."

Page 144. In line 21, column (3), "307502 (23382)" is changed to "193248 (23382);" and column (5), qty "2" is changed to "1."

Immediately after line 21, the following items are added:

Line 21.1: Column (1), "PO;" column (2), blank; column (3), "SWITCH, TOGGLE, 19WPS17A (96139);" column (4), "EA;" column (5), qty "1;" columns (6) and (7), "******;" columns (8) and (9), qty "6;" and column (10), blank.

Line 21.2: Column (1), "PO;" column (2), blank; column (3), "NUT, LOCK, 3/8-24 in., 10275099 (13841);" column (4), "EA;" column (5), qty "1;" columns (6) and (7), "******;" columns (8) and (9), qty "6;" and column (10), blank.

Line 21.3: Column (1), "PO;" column (2), blank; column (3), "WASHER, 30825 (13841);" column (4), "EA;" column (5), qty "1;" columns (6) and (7), "******;" columns (8) and (9), qty "6;" and column (10), blank.

Line 21.4: Column (1), "PO;" column (2), blank; column (3), "SCREW, CAP, HEX HEAD, 3/8-16x1 1/4 in. long, 2734 (13841);" column (4), "EA;" column (5), qty "1;" columns (6) and (7), "******;" columns (8) and (9), qty "6;" and column (10), blank.

Line 21.5: Column (1), "PO;" column (2), blank; column (3), "SCREW, CAP, 3/8-16x7/8 in. long, 4001 (13841);" column (4), "EA;" column (5), qty "1;" columns (6) and (7), "******;" columns (8) and (9), qty "6;" and column (10), blank.

Line 21.6: Column (1), "PO;" column (2), blank; column (3), "LOCKWASHER, 3/8 in. 4313 (13841);" column (4), "EA;" column (5), qty "2;" columns (6) and (7), "******;" columns (8) and (9), qty "6;" and column (10), blank.

In line 23, column (2), "2590-420-7518" is added to Part No. "D48505."

Page 145. Line 4, column (2), "5305-483-0510" is added to Part No. "161146."

Line 10, column (2), "5310-465-6775" is added to part No. "6961."

Page 145. In line 13, column (2), "5305-580-2657" is added to part No. "4220."

In line 14, column (2), "5945-425-5880" is added to part No. "SA376-24V."

In line 15, column (2), "5310-014-2247" is changed to "5310-465-6765."

In line 17, column (2), "5305-580-2121" is added to part No. "4640."

In line 23, column (2), "3120-470-9639" is added to part No. "84581."

added to part No. "10275013."

In line 6, column (2), "5310-480-2325" is added to part No. "1911."

In line 7, column (2), "5305-579-1227" is added to part No. "162108."

In line 9, column (2), "5310-480-4495" is added to part No. "4438."

In line 10, column (2), "5310-465-6826" is added to part No. "164656."

In line 11, column (2), "5305-769-2066" is added to part No. "162092."

In line 12, column (2), "5305-580-1213" is added to part No. "162096."

In line 13, column (2), "5930-420-0277" is added to Part No. "6PL4."

Page 147. In line 4, column (2), "5310-014-2247" is changed to "5310-465-6765."

In line 10, column (2), "6220-570-9777" is added to part No. "137000."

In line 18, column (2), "2540-410-6684" is added to part No. "60076G8."

In line 19, column (2), "5305-769-1890" is added to part No. "106100060613."

In line 23, column (2), "5310-480-4477" is added to part No. "42083213."

In line 24, column (2), "5310-480-4151" is added to part No. "51-36-13."

Page 148. In line 9, column (2), "6210-478-9982" is added to part No. "136999;" column (3), the nomenclature is changed from "LIGHT, INDICATOR DOWNSHIFT WARNING" to "LIGHT, INDICATOR: DOWNSHIFT WARNING AND CONVERTER LOCK UP;" and column (5), qty is changed from "1" to "2."

In line 10, column (2), "6210-479-0011" is added to part No. "137006."

In line 11, column (2), "6210-479-0019" is added to part No. "137007."

In line 12, column (2), "6210-478-9986" is added to part No. "137004."

In line 13, column (2), "6210-478-9987" is added to part No. "137005."

In line 14, column (3), "6210-479-0021" is added to part No. "137008."

Immediately after line 21 "6685-993-5548", line 21.1 is added:

Line 21.1: Column (1), "PO;" column (2), blank; column (3), "SWITCH, DOUBLE THROW, DT2R-B W/MD272 (94464);" column (4), "EA;" column (5), qty "1;" columns (6) through (9), "********;" and column (10), blank.

In line 24, "(MS39061-4)", column (5), qty is changed from "2" to "1."

Page 149. In line 12, column (2), "6680-515-3472" is added to part No. "MS39021."

Page 150. In lines 3 and 4, column (2), "4810-433-3641" is added to Part No. "V55DB2100."

In line 6, column (3), "RELAY, TIME DELAY, 4-016272 (15605)" is changed to "RELAY, 24 Volt, 1115024 (16764)."

In line 9, column (2), "5940-433-5746" is added to part No. "5281907."

In line 13, column (2), "2590-430-7482" is added to part No. "136998."

In line 15, column (2), "2920-430-7512" is added to part No. "136847."

In line 19, column (2), "2590-430-7525" is added to part No. "136858."

In line 20, column (2), "2590-430-7514" is added to part No. "136857."

In line 21, column (2), "2590-430-7535" is added to part No. "136859."

In line 22, column (2), "2590-430-7560" is added to part No. "136860."

In line 23, column (2), "2590-430-7574" is added to part No. "136861."

Page 152. In line 22, column (2), "2530-430-6404" is added to part No. "280037."

Page 153. In line 20, column (2), "5306-452-0931" is added to part No. "203414."

In line 22, column (2), "5330-452-0565" is added to part No. "244446."

Page 154. In line 1, column (2), "5330-465-6453" is added to part No. "239219."

In line 8, column (2), "2530-430-5318" is added to part No. "244448."

In line 9, column (2), '2530-430-5319" is added to art No. "244447."

age 155. In line 2, column (2), "2520-430-5570" is dded to part No. "AF53999."

In line 6, column (2), "5305-480-2902" is added to part No. "90-10629-100."

In line 7, column (2), "5310-445-4712" is added to part No. "90-10332-200."

In line 10, column (2), "5305-480-2902" is added o part No. "90-10629-100."

In lines 11 and 14, column (2), "5310-445-4711" is added to part No. "90-10332-100."

In line 17, column (2), "5305-715-0763" is added to part No. "99-90787-000."

In line 19, column (2), "4730-430-6145" is added to part No. "90-14404-300."

Page 156. In line 4, column (2), "2520-420-6463" is added to part No. "FF35621."

In line 12, column (2), "2520-430-8572" is added to part No. "FD-8020."

In line 23, column (2), "4730-420-6457" is added to part No. "55083-212-2."

In line 26, column (2), "4730-436-7837" is added to part No. "OMC2024-90."

Page 157. In line 1, column (2), "4720-410-5864" is added to Part No. "138125."

Page 157. In line 2, column (2), "4710-433-3609" is added to part No. "114052."

In line 4, column (2), "4720-430-6188" is added to part No. "134171."

In line 9, column (2), "4730-601-5811" is added to part No. "5HTX."

In line 10, column (2), "4730-821-1824" is added to part No. "10BTX."

In line 15, column (2), "4730-235-1506" is added to part No. "8-10JMS."

In line 18, column (2), "4710-455-8828" is added to Part No. "134169."

In line 19, column (2), "4730-359-4733" is added to part No. "10HTX."

In line 20, column (2), "4730-430-5342" is added to part No. "134174."

In line 21, column (2), "4730-235-1502" is added to part No. "5-8 JMS."

In line 23, column (2), "4720-430-6217" is added to part No. "134173."

In line 24, column (2), "4710-410-6719" is added to part No. "134172."

In line 25, column (2), "4710-433-3623" is added to part No. "197693."

In line 26, column (2), "4730-460-2049" is added to part No. "0503-6-8."

Page 158. In line 3, column (2), "4720-430-5343" is added to part No. "134175."

In line 4, column (2), "4710-433-3593" is added to part No. "134176."

In line 8, column (2), "5330-470-9658" is added to part No. "10615343."

In line 23, column (2), "5365-182-6714" is changed to "5315-445-5736."

Page 159. In line 20, column (2), "4820-412-3752" is added to part No. "152 32738-44."

In line 22, column (2), "5310-480-4177" is added to part No. "29602-155."

Page 160. In line 7, column (2), "4820-412-3761" is added to part No. "152-33033."

In line 10, column (2), "5310-763-0395" is added to part No. "151-20324-2."

In line 11, column (2), "5330-492-2931" is added to part No. "151-24829."

In line 12, column (2), "5305-296-0261" is added to part No. "151-24449."

In line 20, column (2), "5330-434-1452" is added to part No. "29791-018."

In line 24, column (2), "2530-420-6462" is added to Part No. "40101."

Page 161. In line 1, column (2), "2530-436-7662" is

In line 7, column (2), "5365-717-6719" is added to part No. "959-11."

In line 8, column (2), "5365-763-0457" is added to part No. "40117."

In line 11, column (2), "5330-470-9647" is added to part No. "31201125."

In line 13, column (2), "5365-717-6945" is added to part No. "8-228."

In line 14, column (2), "2530-433-3465" is added to part No. "40116."

In line 16, column (2), "2530-430-5305" is added to part No. "40115."

In line 19, column (2), "5330-445-5984" is added to part No. "31268."

In line 20, column (2), "2520-430-5303" is added to part No. "40113."

In line 21, column (2), "2530-451-3331" is added to part No. "40112."

In line 25, column (2), "2530-434-4373" is added to part No. "38982."

Page 162. In line 2, column (2), "2530-426-7662" is added to part No. "234."

In line 16, column (2), "5365-708-7610" is added to part No. "31117."

Page 163. In line 2, column (3), "2530-405-4251" is added to part No. "2147."

In line 3, column (2), "5340-465-5966" is added to part No. "37336."

In line 5, column (2), "2130-138-0343" is added to part No. "2148."

In line 6, column (2), "2530-412-3808" is added to part No. "2152."

In line 14, column (2), "5330-476-5524" is added to part No. "32315."

In line 18, column (2), "5330-899-2762" is changed to "5330-842-7527."

In line 19, column (2), "5330-405-6029" is added to part No. "2-14N219-7."

In line 21, column (2), "4820-443-9526" is added to part No. "2173."

In line 22, column (2), "5330-706-2209" is added to part No. "32621."

In line 25, column (2), "2530-412-8312" is added to part No. "88837."

Page 164. In line 3, column (2), "5360-465-6843" is added to part No. "45ALS24SP33."

In line 6, column (2), "5310-014-2247" is changed to "5310-465-6765."

In line 10, column (2), "2530-420-6350" is added to part No. "UC24004."

In line 15, column (2), "5310-465-6767" is added to part No. "34611."

Page 165. In line 3, column (2), "2590-430-7458" is added to part No. "5DS00-1350."

In line 9, column (2), "2520-420-6412" is added to part No. "9020435233."

Page 166. In line 1, column (2), "2530-430-5212" is added to part No. "1269579."

In line 7, column (2), "5305-580-0884" is added to part No. "G-271723."

In line 11, column (2), "5305-580-1068" is added to part No. "020177."

In line 13, column (2), "4730-044-4583" is added to part No. "G444583."

In line 22, column (2), "3120-476-5512" is added to part No. "044952."

Page 167. In line 8, column (2), "2530-420-6445" is added to part No. "TE702010-250."

Page 169. In line 10, column (2), "2540-333-3560" is added to part No. "159D1."

In line 11, column (2), "5310-480-4144" is added to part No. "158-34A."

In line 13, column (2), "5310-480-4293" is added to part No. "158J1A."

In line 15, column (2), "5305-769-2244" is added to part No. "160S."

In line 19, column (2), "5310-014-2247" is changed to "5310-465-6765."

Page 170. In line 10, column (2), "4720-410-5867" is added to part No. "138117."

In line 15, column (2), "5310-014-2247" is changed to "5310-465-6765."

In line 22, column (2), "2920-433-3692" is added to part No. "1000641."

Page 171. In lines 8, 14, and 19, column (2), "2920-433-3692" is added to part No. "1000641."

Page 172. In line 1, column (2), "5310-445-5388" is added to part No. "30349."

In line 2, column (2), "5306-739-7754" is added to part No. "7539501."

In line 5, column (2), "5310-014-2247" is changed to "5310-465-6765."

In line 9, column (2), "5310-465-6775" is added to part No. "6961."

In line 22, column (2), "5310-014-2247" is changed to "5310-465-6765."

Page 173. In line 2, column (2), "5310-465-6775" is added to part No. "6961."

In line 21, column (2), "5310-465-6806" is added to part No. "7556."

Page 174. In lines 2 and 6, column (2), "5310-014-2247" is changed to "5310-465-6765."

In line 12, column (2), "5305-769-1894" is added to part No. "160515."

In line 14, column (2), "5310-014-2247" is changed to "5310-465-6765."

Page 175. In line 9, column (2), "5305-580-0883" is

In line 18, column (2), "5306-457-5146" is added to part No. "165007."

Page 176. In line 18, column (2), "5310-452-1355" is added to part No. "6489."

Page 177. In line 11, column (2), "5310-465-6198" is added to part No. "4405."

In line 12, column (2), "5305-726-2551" is changed to "5305-765-3775."

In line 13, column (2), "5310-445-5739" is added to part No. "10275013."

In line 22, column (2), "5310-465-6198" is added to part No. "4405."

Page 178. In line 9, column (2), "5310-452-1355" is added to part No. "6489."

In line 11, column (2), "5305-769-2294" is added to part No. "4676."

In line 15, column (2), "5310-495-5738" is added to part No. "H-645."

In line 17, column (2), "5310-445-5737" is added to part No. "164417."

In line 21, column (2), "5310-765-2094" is added to part No. "125840."

Page 179. In line 24, column (2), "5310-445-5737" is added to part No. "164417."

Page 180. In line 2, column (2), "5305-763-0320" is added to part No. "165748."

In line 14, column (2), "2530-412-3524" is added to part No. "282775."

In line 21, column (2), "2530-412-3786" is added to part No. "282826."

In line 23, column (2), "5306-498-6671" is added to part No. "242386."

Page 181. In line 2, column (2), "2530-430-5264" is added to part No. "246363."

In line 3, column (2), "2530-430-5298" is added to part No. "282827."

In line 7, column (2), "2530-412-3787" is added to part No. "242018."

In line 8, column (2), "2530-430-5226" is added to part No. "246371."

In line 10, column (2), "5360-498-6111" is added to part No. "243384."

Page 182. In line 2, column (2), "2520-417-1123" is added to part No. "757305."

In line 20, column (2), "9505-445-6886" is added to part No. "1000520."

In line 22, column (2), "5365-708-1818" is added to part No. "757297."

In line 24, column (2), "2520-420-6496" is added to part No. "758891."

Page 183. In line 6, column (2), "5330-451-9582" is added to part No. "618-750-24."

Page 184. In line 7, column (2), "2520-434-4730" is added to part No. "282055."

In line 14, "5301-834-7751," column (5), qty is changed from "24" to "40."

In line 15, "5310-834-7601," column (5), qty is changed from "24" to "40."

Page 185. In line 7, column (2), "5307-426-5857" is added to part No. "165534;" and column (5), qty is changed from "24" to "40."

In line 8, column (2), "5310-465-6225" is added to part No. "112513."

In line 13, column (2), "5310-465-6225" is added to part No. "112513."

Page 186. In line 17, column (2), "2520-430-5299" is added to part No. "758997."

Page 187. In line 5, column (2). "5330-465-6649" is added to part No. "759004."

In line 17, column (2), "5305-492-3147" is added to part No. "4226."

In line 23, column (2), "2530-420-6497" is added to part No. "757920."

Page 188. In line 14, column (2), "2520-417-1130" is added to part No. "757313."

Page 189. In line 3, column (2), "5305-480-4539" is added to part No. "165729."

In line 4, column (2), "5305-480-4541" is added to part No. "165730."

In line 20, column (2), "5305-480-2882" is added to part No. "4152."

In line 23, column (2), "5310-434-1546" is added to part No. "6079."

In line 24, column (2), "5307-435-2521" is added to part No. "39095."

Page 190. In line 3, column (2), "5310-445-5737" is added to part No. "164417."

In line 4, column (2), "5310-438-7760" is added to part No. "4320."

In line 17, column (2), "5305-721-3223" is added to part No. "4077."

In line 20, column (2), "5310-480-2713" is added to part No. "4271."

Page 191. In line 5, column (2), "5365-236-6665" is added to part No. "228280."

In line 7, column (2), "5306-498-6671" is added to part No. "242386."

In line 8, column (2), "5365-717-6936" is added to part No. "238373."

In line 12, column (2), "5360-255-6905" is added to part No. "234435."

In line 14, column (2), "5360-465-5810" is added to part No. "97033."

In line 23, column (2), "2530-430-5280" is added to part No. "10130498."

Page 193. In line 6, column (2), "5360-414-1077" is added to part No. "242413."

In line 13, column (2), "4720-430-6171" is added to part No. "244927."

In line 15, column (2), "5315-769-1221" is added to part No. "4474."

Page 194. In line 5, column (2), "2520-417-1123" is added to part No. "757305."

In line 23, column (2), "9505-445-6886" is added to part No. "1000520."

Page 195. In line 2, column (2), "5365-708-1818" is added to part No. "757297."

In line 4, column (2), "2520-420-6496" is added to part No. "758891."

In line 10, column (2), "5330-451-9582" is added to part No. "618-750-24."

Page 196. In line 11, column (2), "2530-434-4668" is added to part No. "282054."

In line 12, column (2), "2530-434-4730" is added to part No. "282055."

Page 197. In line 13, column (2), "5307-476-5857" is added to part No. "165534."

In lines 14 and 17, column (2), "5310-465-6225" is added to part No. "112513."

Page 198. In line 19, column (2), "2530-430-5299" is added to part No. "758997."

Page 199. In line 8, column (2), "5330-465-6649" is added to part No. "759004."

In line 20, column (2), "5305-492-3147" is added to part No. "4226."

Page 200. In line 1, column (2), "4710-444-0124" is added to part No. "757925."

In line 4, column (2), "2530-420-6497" is added to part No. "757920."

In line 19, column (2), "2520-417-1130" is added to part No. "757313."

Page 201. In line 12, column (2), "5305-480-4539" is added to part No. "165729."

In line 13, column (2), "5305-480-4541" is added to part No. "165730."

Page 202. In line 6, column (2), "5305-480-2882' is added to part No. "4152."

In line 9, column (2), "5310-434-1456" is added to part No. "6069."

In line 10, column (2), "5307-435-2521" is added to part No. "39095."

Page 209. In line 3, column (2), "2530-436-7551" is added to part No. "39189."

Page 209. In line 4, column (2), "2530-412-3810" is added to part No. "2199-2."

Page 252. Immediately after figure 43, figure 43.1 is added as follows:

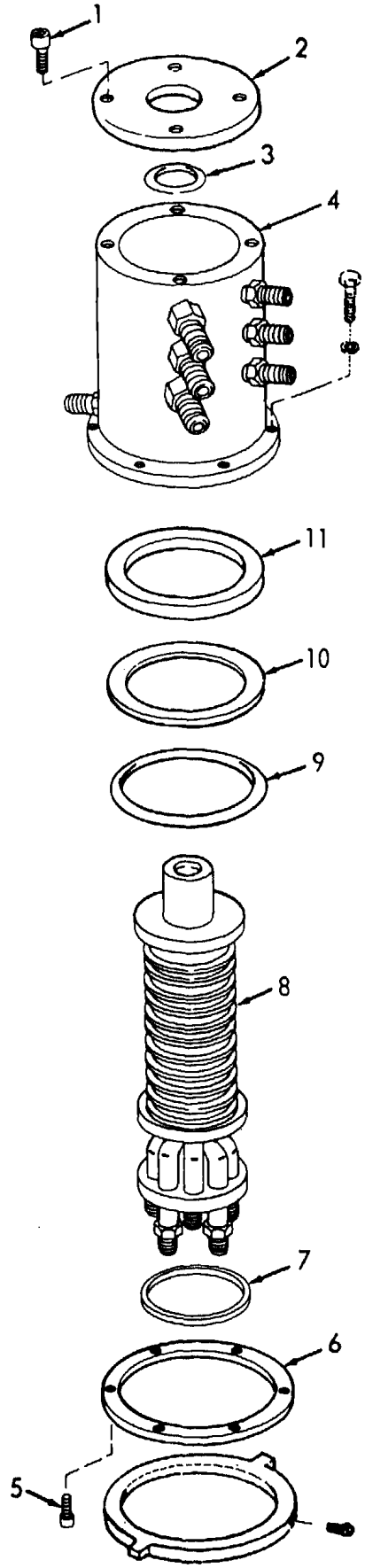

ME 3810-290-3

Figure 43.1. Rotary seal assembly.

or manufacturer's part numbers within this change will be appropriately reflected in the index.

By Order of the Secretary of the Army:

CREIGHTON W. ABRAMS
General, United States Army
Chief of Staff

Official:
VERNE L. BOWERS
Major General, United States Army
The Adjutant General

Distribution:
To be distributed in accordance with DA Form 12-25B (qty rqr block No. 919) Direct and General Support Maintenance Requirements for Cranes: Wheel Mounted.

TECHNICAL MANUAL
No. 5-3810-290-34P

HEADQUARTERS
DEPARTMENT OF THE ARMY
WASHINGTON, D. C., *7 December 1971*

DIRECT SUPPORT AND GENERAL SUPPORT REPAIR PARTS AND SPECIAL TOOLS LISTS (INCLUDING DEPOT MAINTENANCE REPAIR PARTS AND SPECIAL TOOLS LISTS)

CRANE, WHEEL MOUNTED: 5 TON AT 10 FOOT RADIUS, 3/8 CU YD, DIESEL ENGINE DRIVEN, 4x4 ROUGH TERRAIN AIR TRANSPORTABLE (HANSON MACHINERY CO. MODEL H446A) FSN 3810-859-2404

Current as of 18 November 1971

		Listing Page	Illus. Figure
SECTION I.	INTRODUCTION	v	
II.	REPAIR PARTS FOR DS, GS, AND DEPOT MAINTENANCE	1	
Group 01.	Push Arms	1	
	Push Arms		01
02.	Cab Assembly and Seat	1	
	Windshield washer		02
	Wiper and motor		03
	Cab assembly		04
	Seat assembly		05
03.	Vehicular Lights	11	
	Search light		06
	Clearance lights		07
	Carrier lights		08
	Blackout lights		09
04.	Hydraulic Lines and Fittings	13	
	Hydraulic tube brackets		10
	Hydraulic lines and fittings		11
	Hydraulic lines and fittings (Cont'd)		12
05.	Hydraulic Cylinders	22	
	Boom hoist cylinder		13
	Boom extension cylinder		14
	Outrigger cylinder		15
	Stabilizing cylinder		16
06.	Hydraulic Pump, Tank and Filter	27	
	Hydraulic reservoir and connections		17
	Hydraulic oil filter		18
	Hydraulic pump		19
	Pump drive		20
	Pump drive gear box		21
07.	Hydraulic Valves	32	
	Main valve bank assembly		22
	Main valve bank inlet valve		23
	Main valve bank outlet valve		24
	Main valve bank hoist valve		25
	Main valve bank boom valve		26
	Outrigger valve bank assembly		27
	Outrigger valve bank inlet valve		28
	Outrigger valve bank outlet valve		29
	Outrigger valve bank swing valve		30
	Outrigger valve bank center section valves		31
	Boom hoist valve mountings		32

		Page	Figure
Group 08.	Superstructure	41	
	Block assembly, tackle		33
	Boom head		34
	Boom head extension		35
	Boom angle indicator		36
	Anti-rotation arm		37
	Boom and telescope		38
	Hoist drive motor		39
	Hoist gear box		40
	Swing drive motor		41
	Swing gear box		42
	Rotary seal, superstructure		43
	Superstructure		44
09.	Engine Intake and Exhaust Systems	56	
	Muffler and pipes		45
	Air intake		46
	Air cleaner		47
	Ether start		48
10.	Engine Cowling and Radiator	59	
	Engine cowling		49
	Alcohol evaporator		50
	Water filter		51
	Radiator and related parts		52
11.	Fuel Tanks and Lines	64	
	Fuel lines		53
	Fuel tanks		54
12.	Transmission Piping	66	
	Transmission lines and fittings		55
	Transmission oil filter		56
13.	Drive Shafts and Transfer Assembly	68	
	Drive shafts		57
	Transfer case assembly		58
14.	Transmission and Related Parts	75	
	Transmission solenoid valve		59
	Transmission control valve		60
	Transmission selector valve		61
	Transmission oil pump		62
	Main housing, L/H		63
	Collector housing		64
	Adapter housing		65
	Tachometer drive		66
	Transmission clutch		67
	Torque converter		68
	Transmission shaft		69
	Main housing, R/H		70
15.	Alternator	88	
	Alternator and drive		71
	Alternator assembly		72
16.	Engine and Components	91	
	Fuel lines		73
	Fuel strainer and filter		74
	Engine front mounting		75
	Oil filter and adapter		76
	Starter		77
	Starter end and brush rig		78
	Fan bracket and idler		79
	Water connections		80
	Water pump		81
	Air compressor installation		82
	Air compressor head and block		83
	Air compressor crankcase		84
	Tachometer adapter		85
	Fuel transfer pump		86
	Fuel pump drive		87
	Governor linkage		88

		Page	Figu
	Governor solenoid and linkage		8
	Blower drive support		9
	Flywheel and housing		9
	Governor housing		9
	Governor variable spring housing		9
	Exhaust manifold		9
	Cylinder head cover and injector lines		9
	Fuel injector controls		9
	Fuel injector		9
	Oil pan		9
	Oil strainer and tube		9
	Oil cooler		10
	Air inlet housing assembly		10
	Blower assembly		10
	Rocker arms, valves and cam follower		10
	Upper front cover, crankcase		10
	Crankcase cover and oil pump		10
	Idler gear timing		10
	Cylinder head		10
	Piston and connecting rod		10
	Crankshaft		10
	Camshaft, gear and pulley		11
	Engine block		11
Group 17.	Air System	132	
	Air piping		11
	Air piping (Cont'd)		11
	Air horn		11
	Air system control valves		11
	Air tanks		11
18.	Controls, Instrument Panels and Heater	142	
	Speed sensing switch		11
	Throttle controls		11
	Transfer shift control		11
	Transmission shift tower		12
	Flarestat, relay and beam selector		12
	Heater		12
	Instruments, lights and switches		12
	Instrument panels and meters		12
	Sending units, valves and relays		12
19.	Brake Control System	151	
	Trailer brake control		12
	Brake control valve		12
	Power cluster brake		12
20.	Steering Controls	156	
	Steering lines		13
	Steering pump and drive		13
	Control valve, rear steer		13
	Steer cylinder, front		13
	Steer cylinder, rear		13
	Steering valve		13
	Steering column		13
	Steering gear assembly		13
21.	Outriggers, Frame, Storage Boxes and Mirrors	168	
	Front outriggers		13
	Rear outriggers		13
	Mirror		13
	Tire inflator		14
	Battery box and tool box		14
	Pintle and eye bolt		14
	Fenders, brackets and light boxes		14
	Frame and brackets		14

		Page	Figure
Group 22.	Front Landing Gear	179	
	Front wheel and tire		145
	Brake actuator		146
	Planetary gear		147
	Brake components		148
	Ball and socket assembly		149
	Axle carrier		150
23.	Rear Landing Gear	190	
	Rear wheel and tire		151
	Steer lock		152
	Brake actuator		153
	Planetary gear		154
	Brake components		155
	Ball and socket assembly		156
	Axle carrier		157
24.	Kits and Sets	202	

SECTION III. SPECIAL TOOLS, TEST AND SUPPORT EQUIPMENT FOR DS, GS, AND DEPOT MAINTENANCE (Not applicable)

IV. FEDERAL STOCK NUMBER AND REFERENCE NUMBER INDEX 367

1. Scope

a. This manual lists repair parts, special tools, test and support equipment required for the performance of direct support, general support, and depot maintenance of the crane.

b. Repair parts listed represent those authorized for use at indicated maintenance levels and will be requisitioned (on an "as required" basis until stockage is justified by demand in accordance with AR 735–35 or AR 710–2).

2. General

This Repair Parts and Special Tools List is divided into the following sections:

a. Repair Parts—Section II. A list, in figure and item number sequence, of repair parts authorized for the performance of maintenance at the direct support, general support, and depot level, including those items which must be removed for replacement of the authorized item. Items, except kits and sets, are listed by assembly groups in top down breakdown sequence. Repair parts kits and sets are listed separately as Group 24 at the end of the Repair Parts List without regard to the assembly group to which they belong. Components of the kits and sets are listed in their proper sequence in the assembly group to which they belong and are referenced to the FSN of the kit or set.

b. Special Tools, Test and Support Equipment—Section III. Not applicable.

c. Federal Stock Number and Reference Number Index—Section IV. A list of Federal stock numbers in ascending numerical sequence followed by a list of reference numbers in ascending alpha-numeric sequence, cross-referenced to the illustration figure number and item number.

NOTE

Items not illustrated are cross-referenced to group number.

3. Explanation of Columns

The following provides an explanation of columns in the tabular lists in Section II.

a. Source, Maintenance, and Recoverabilit Code (SMR).

(1) Source code indicates the source for th listed item. Source codes are:

Code	*Explanation*
P	Repair Parts, Special Tools and Test Equipmer supplied from GSA/DSA, or Army supply sy: tem, and authorized for use at indicated mai tenance levels.
P2	Repair Parts, Special Tools and Test Equipmer which are procured and stocked for insuranc purposes because the combat or military esse tiality of the end item dictates that a minimu quantity be available in the supply system.
M	Repair Parts, Special Tools and Test Equipmer which are not procured or stocked, as such, i the supply system but are to be manufactured a indicated maintenance levels.
A	Assemblies which are not procured or stocked a such, but are made up of two or more units. Suc component units carry individual stock numbe and descriptions, are procured and stocked se arately and can be assembled to form the r quired assembly at indicated maintenance level
X	Parts and assemblies that are not procured c stocked because the failure rate is normally b low that of the applicable end item or componen The failure of such part or assembly should r sult in retirement of the end item from the su ply system.
X1	Repair Parts which are not procured or stocke The requirement for such items will be filled b the next higher assembly or component.
X2	Repair Parts, Special Tools, and Test Equipmer which are not stocked and have no foreseen mo tality. The indicated maintenance level requirin such repair parts will attempt to obtain th parts through cannibalization or salvage, if n obtainable through cannibalization or salvag the item may be requisitioned with exceptio data, from the end item manager, for immedia use.
G	Major assemblies that are procured with PEM funds for initial issue only as exchange assem blies at DSU and GSU level. These assemblie will not be stocked above DS and GS level c returned to depot suply level.

NOTE

Cannibalization or salvage may be used as a source of supply for any items source coded above except those coded X1 and aircraft support items as restricted by AR 700–42.

(2) Maintenance code indicates the lowest level of Maintenance authorized to install the listed item. Repair Parts and Special Tools assigned maintenance code "C" may be stocked at the operator level of maintenance when authorized by the Unit Commander. The maintenance level codes are:

Code	*Explanation*
C	Operator/crew maintenance
O	Organizational maintenance
F	Direct Support maintenance
H	General Support maintenance
D	Depot maintenance

(3) Recoverability code indicates whether unserviceable items should be returned for recovery or salvage. Items not coded are expendable. Recoverability codes are:

Code	*Explanation*
R	Applied to repair parts (assemblies and components), special tools and test equipment which are considered economically reparable at direct and general support maintenance levels. When the item is no longer economically reparable, it is normally disposed of at the GS level. When supply consideration dictate, some of the repair parts may be listed for automatic return to supply for depot level repair as set forth in AR 710-50. When so listed, they will be replaced by supply on an exchange basis.
S	Repair Parts, Special Tools, Test Equipment and assemblies which are economically reparable at DSU and GSU activities and which normally are furnished by supply on an exchange basis. When items are determined by a GSU to be uneconomically reparable, they will be evacuated to a depot for evaluation and analysis before final disposition.
T	Higher dollar value recoverable repair parts, special tools and test equipment which are subject to special handling and are issued on an exchange basis. Such items will be evacuated to the depot for overhaul or final disposition. Communication-Electronics and missile support items will be repaired/overhauled only at depots.
U	Repair Parts, Tools and Test Equipment specifically selected for salvage by reclamation units because of precious metal content, critical materials, high dollar value or reusable casings or castings.

b. Federal Stock Number. This column indicates the Federal stock number assigned to the item and will be used for requisitioning purposes.

c. Description. This column indicates the Federal item name and a minimum characteristic description required to describe the item. Assembly components and subassemblies are indented under major assemblies. The abbreviation "w/e" when used as a part of the nomenclature

other reference number is followed by the applicable five-digit Federal supply code for manufacturers in parenthesis. Repair part quantities included in kits and sets are shown in front of the repair part name. Material required for manufacture or fabrication is identified.

d. Unit of Measure (U/M). A two-character alphabetic abbreviation indicating the amount or quantity of the item, as used, upon which the allowances are based, e.g., ft, ea, pr, etc.

e. Quantity Incorporated in Unit. This column indicates the quantity of the item used in the assembly group. A "V" appearing in this column in lieu of a quantity indicates that a definite quantity cannot be indicated (e.g., shims, spacers, etc.).

f. Thirty-Day DS/GS Maintenance Allowance.

(1) Items authorized for use as required but not for initial stockage are identified with an asterisk in the allowance column.

(2) The allowance columns are divided into three subcolumns. The quantitive allowance of special tools for DS/GS levels of maintenance will represent initial stockage for a 30-day period for the number of equipments supported (Not applicable).

g. Items Authorized.

(1) Items authorized for use as required but not for initial stockage are identified with an asterisk in the allowance column.

(2) This column indicates the total quantity of special tools required for distribution and contingency planning purposes. When special tools are not required, enter statement (Not applicable).

h. Depot Maintenance Allowance Per 100 Equipments.

(1) Items authorized for use as required but not for initial stockage are identified with an asterisk in the allowance column.

(2) This column indicates the total quantity of special tools authorized for depot maintenance of 100 equipments. When special tools are not required, enter statement (Not applicable).

i. Illustration. This column is divided as follows:

(1) *Figure number.* Indicates the figure number of the illustration on which the item is shown.

4. Special Information

a. Parts which require manufacture or assembly at a category higher than that authorized for installation will indicate in the source column the higher category.

b. The following publications pertain to the crane and its components:

LO 5-3810-290-12-1, 2, 3	Lubrication Order
TM 5-3810-290-15	Operator, Organizational, Direct Support, General Support and Depot Maintenance Manual
TM 5-3810-290-20P	Organizational Maintenance Repair Parts and Special Tools Lists

5. How to Locate Repair Parts

a. When Federal stock number, reference number or part number is unknown:

(1) Using the table of contents, determine the assembly group within which the repair part belongs. This is necessary since illustrations are prepared for assembly groups, and listings are divided into the same groups.

(2) Find the illustration covering the assembly group to which the repair part belongs.

(3) Identify the repair part on the illustration and note the illustration figure number and item number of the repair part.

(4) Using the Repair Parts Listing, find the assembly group to which the repair part belongs and locate the illustration figure and item number noted on the illustration.

b. When the Federal stock number, reference number, or part number is known:

(1) Using the Index of Federal Stock Numbers, Reference Numbers, and/or Part Numbers find the pertinent Federal stock number, reference number, and/or part number. This index is in ascending FSN sequence followed by a list of reference numbers or part numbers in ascending alpha-numeric sequence, cross-referenced to the illustration figure number and item number.

(2) Using the Repair Parts Listing, find the assembly group of the repair part and the illustration figure number and item number referenced in the Index of Federal Stock Numbers Reference Numbers, or Part Numbers.

c. When the Federal stock number, reference number, or part number is known and the repair part is not illustrated:

(1) Using the Index of Federal Stock Numbers, Reference Numbers, or Part Numbers find the pertinent Federal stock number, reference number, or part number. Parts which are not illustrated will be referenced to a group number This section is in ascending FSN sequence followed by a list of reference numbers or part numbers in alpha-numeric sequence, cross-referenced to the groups.

(2) Using the Table of Contents, locate the group number and page number.

(3) Using the applicable group and page number, locate the pertinent FSN, reference number, or part number in the Repair Parts Listing

6. Recommendations for Maintenance Publications Improvements

Report of errors, omissions, and recommendations for improving this publication by the individual user is encouraged. Reports should be submitted on DA Form 2028 (Recommended Changes to Publications), and forwarded direct to Commanding General, U.S. Army Mobility Equipment Command, ATTN: AMSME-MPP, 4300 Goodfellow Boulevard, St. Louis, Mo. 63120.

(1) SMR CODE	(2) FEDERAL STOCK NUMBER	(3) DESCRIPTION REF NUMBER & MFR CODE	USABLE ON CODE	(4) UNIT OF MEAS	(5) QTY INC IN UNIT	(6) 30-DAY OS MAINT ALLOWANCE (a) 1-20	(b) 21-50	(c) 51-100	(7) 30-DAY GS MAINT ALLOWANCE (a) 1-20	(b) 21-50	(c) 51-100	(8) 1-YR ALW PER 100 EQUIP CNTGY	(9) DEPOT MAINT ALW PER 100 EQUIP	(10) ILLUSTRATION (a) FIG. NO.	(b) ITEM NO.
		SECTION II - REPAIR PARTS FOR DS, GS AND DEPOT MAINTENANCE													
		GROUP 01 - PUSH ARMS													
P O		NUT, PLAIN, HEXAGON: DIRT SHIELD MTG, 1/2-13 THD SIZE 1124 (13841)		EA	12	*	*	*	*	*	*	*	*	1	1
P O		WASHER, LOCK: DIRT SHIELD MTG, 1/2 IN. 1874 (13841)		EA	12	*	*	*	*	*	*	*	*	1	2
P O		SCREW, CAP, HEXAGON HEAD: DIRT SHIELD MTG, 1/2-13 X 1 1/2 IN. LG 1126 (13841)		EA	12	*	*	*	*	*	*	*	*	1	3
X20		SHIELD, DIRT: PUSH ARM MTG 18802 (13841)		EA	1									1	4
M O		WIRE, LOCK: PUSH ARM SCREW MANUFACTURE FROM:		EA	2									1	5
P O	9525-529-9196	WIRE, STEEL: 0.051 IN. DIA, 2 FT REQUIRED				*	*	*	*	*	*				
P O	5305-939-9204	SCREW, CAP, HEXAGON HEAD: PUSH ARM MTG, 3/4-10 X 2 IN. LG MS90725-187 (96906)		EA	4	*	*	*	*	*	*	*	*	1	6
P O		WASHER, LOCK: PUSH ARM MTG, 3/4 IN. MS35338-51 (96906)		EA	4	*	*	*	*	*	*	*	*	1	7
P O		WASHER, FLAT: PUSH ARM MTG, 3/4 IN. MS27183-23 (96906)		EA	4	*	*	*	*	*	*	*	*	1	8
P O		PIN, COTTER: PUSH ARM PIN, 1/2 IN. DIA, 3 5/8 IN. LG 29301 (13841)		EA	2	*	*	*	*	*	*	*	*	1	9
X20		PIN, STRAIGHT, HEADED: PUSH ARM MTG 20224 (13841)		EA	2									1	10
X20		ARM, PUSH: RH 18800 (13841)		EA	1									1	11
X20		ARM, PUSH: LH 18799 (13841)		EA	1									1	12
		GROUP 02 - CAB ASSEMBLY AND SEAT													
A O		WASHER, WINDSHIELD AW388 (60703)		EA	1									2	
P O	2540-731-1261	BAG ASSEMBLY 87900-20 (60703)		EA	1	*	*	*	*	*	*	*	*	2	1
P O	5310-660-2649	NUT, PLAIN, HEXAGON: WASHER BAG MTG, 1/4-28 THD SIZE MS35690-424 (96906)		EA	2	*	*	*	*	*	*	*	*	2	2
P O	5310-018-7241	WASHER, LOCK: WASHER BAG MTG, 1/4 IN. 4312 (23382)		EA	2	*	*	*	*	*	*	*	*	2	3
P O	5305-267-8953	SCREW, CAP, HEXAGON HEAD: WASHER BAG MTG, 1/4-28 X 5/8 IN. LG		EA	2	*	*	*	*	*	*	*	*	2	4
X20		BRACKET, MOUNTING 86913 (60703)		EA	1									2	5
M O		HOSE, RUBBER: TEE TO JET BODY MANUFACTURE FROM:		EA	2									2	6
P O		HOSE, RUBBER, LH, 17 1/2 IN., RH, 32 IN., 1/8 IN. ID F15 (60703)				*	*	*	*	*	*				

(1) SMR CODE	(2) FEDERAL STOCK NUMBER	(3) DESCRIPTION REF NUMBER & MFR CODE	USABLE ON CODE	(4) UNIT OF MEAS	(5) QTY INC IN UNIT	(6) 30-DAY DS MAINT ALLOWANCE (a) 1-20	(b) 21-50	(c) 51-100	(7) 30-DAY GS MAINT ALLOWANCE (a) 1-20	(b) 21-50	(c) 51-100	(8) 1-YR ALW PER 100 EQUIP CNTGY	(9) DEPOT MAINT ALW PER 100 EQUIP	(10) ILLUSTRATION (a) FIG. NO.	(b) ITEM NO.
P O	4730-406-6957	TEE, HOSE 87223-1 (60703)		EA	1	*	*	*	*	*	*	*	*	2	7
M O		HOSE, RUBBER, VALVE TO WASHER TEE MANUFACTURE FROM:		EA	2									2	8
P O	4720-673-7447	HOSE, RUBBER, VALVE TO TUBE, 7 1/2 IN. REQUIRED, TUBE TO TEE, 10 1/2 IN. REQUIRED 846 (60703)				*	*	*	*	*	*				
M O		TUBING, COPPER: WASHER TO WINDSHIELD MANUFACTURE FROM:		EA	1									2	9
P O	4710-060-7187	TUBE, COPPER, 10 FT REQUIRED, 3/16 IN. OD				*	*	*	*	*	*				
P O		BODY ASSEMBLY, JET 78778-11NS (60703)		EA	2	*	*	*	*	*	*	*	*	2	10
M O		HOSE, RUBBER, WASHER TO FOOT PUMP MANUFACTURE FROM:		EA	2									2	11
P O	4720-528-2252	HOSE, RUBBER, VALVE TO TUBE, 8 IN. REQUIRED, TUBE TO PUMP, 15 IN. REQUIRED 848 (60703)				*	*	*	*	*	*				
M O		TUBING, COPPER: WASHER TO PUMP MANUFACTURE FROM:		EA	1									2	12
P O	4710-540-2666	TUBE, COPPER, 6 FT REQUIRED, 1/4 IN. OD				*	*	*	*	*	*				
P O	5310-014-2247	NUT, PLAIN, HEXAGON: PUMP BRACKET MTG, 1/4-28 THD SIZE 4200 (23382)		EA	2	*	*	*	*	*	*	*	*	2	13
P O	5310-018-7241	WASHER, LOCK: PUMP BRACKET MTG, 1/4 IN. 4312 (23382)		EA	2	*	*	*	*	*	*	*	*	2	14
P O	5305-068-0506	SCREW, CAP, HEXAGON HEAD: PUMP BRACKET MTG, 1/4-28 X 3/4 IN. LG		EA	2	*	*	*	*	*	*	*	*	2	15
P O	5310-012-0370	NUT, PLAIN, HEXAGON: PUMP MTG, 7/16-20 THD SIZE 120370 (60703)		EA	1	*	*	*	*	*	*	*	*	2	16
P O	5310-209-6074	WASHER, LOCK: PUMP MTG, 7/16 IN.		EA	1	*	*	*	*	*	*	*	*	2	17
P O	2540-731-1264	BULB AND PLATE ASSEMBLY 88965J (60703)		EA	1	*	*	*	*	*	*	*	*	2	18
X20		BRACKET, FOOT VALVE 332158 (23382)		EA	1									2	19
P O	2540-287-2317	BLADE, WINDSHIELD WIPER C1100-20 (82484)		EA	1	*	*	*	*	*	*	*	*	3	1
P O		ARM, WINDSHIELD WIPER S2310-20 (82484)		EA	1	*	*	*	*	*	*	*	*	3	2
P O		ELBOW, PIPE TO TUBE 10000320 (23382)		EA	1	*	*	*	*	*	*	*	*	3	3
X20		TUBE, COPPER: EXHAUST 197691 (23382)		EA	1									3	4
P O	5305-680-5832	SCREW, MACHINE: MOTOR MTG, NO. 10-32 X 1/2 IN. LG 162134 (23382)		EA	2	*	*	*	*	*	*	*	*	3	5
P O		WASHER, LOCK: MOTOR MTG, NO. 10 SCREW SIZE 164604 (23382)		EA	2	*	*	*	*	*	*	*	*	3	6
P O	2540-930-9102	MOTOR ASSEMBLY, AIR: WIPER MS53017-1 (96906)		EA	1	*	*	*	*	*	*	*	*	3	
P O		NUT, ACORN S2224-1 (82484)		EA	1	*	*	*	*	*	*	*	*	3	7

(1) SMR CODE	(2) FEDERAL STOCK NUMBER	(3) DESCRIPTION REF NUMBER & MFR CODE	USABLE ON CODE	(4) UNIT OF MEAS	(5) QTY INC IN UNIT	(6) 30-DAY DS MAINT ALLOWANCE (a) 1-20	(b) 21-50	(c) 51-100	(7) 30-DAY GS MAINT ALLOWANCE (a) 1-20	(b) 21-50	(c) 51-100	(8) 1-YR ALW PER 100 EQUIP CNTGY	(9) DEPOT MAINT ALW PER 100 EQUIP	(10) ILLUSTRATION (a) FIG. NO.	(b) ITEM NO.
P O	5340-946-2231	BUSHING, TAPERED S2280 (82484)		EA	1	*	*	*	*	*	*	*	*	3	8
P O		FITTING, EXHAUST F582 (82484)		EA	1	*	*	*	*	*	*	*	*	3	9
P O		SCREW, MACHINE: BRACKET MTG, NO. 12-24 X 1/2 IN. LG C992 (82484)		EA	2	*	*	*	*	*	*	*	*	3	10
X20		BRACKET, MOUNTING S2254 (82484)		EA	1									3	11
P F		SCREW, MACHINE: VALVE MTG, NO. 8-32 X 1/2 IN. LG C547 (82484)		EA	2	*	*	*	*	*	*	*	*	3	12
P F		SCREW, MACHINE: VALVE MTG, NO. 10-32 X 1/2 IN. LG C511 (82484)		EA	2	*	*	*	*	*	*	*	*	3	13
P F	2540-312-2101	SEAL, VALVE BODY F254 (82484)		EA	2	*	*	*	*	*	*	*	*	3	14
P F		VALVE ASSEMBLY GF102-5 (82484)		EA	1	*	*	*	*	*	*	*	*	3	15
X1		SCREW F540 (82484)		EA	8									3	16
X1		END PLATE F234RSM (82484)		EA	1									3	17
X1		END PLATE F234LSM (82484)		EA	1									3	18
P F		GASKET: END PLATE F255-1 (82484)		EA	2	*	*	*	*	*	*	*	*	3	19
X1		PIN F162 (82484)		EA	1									3	20
P F	3825-722-3223	PACKING, PREFORMED: PRIMARY ROD F272 (82484)		EA	4	*	*	*	*	*	*	*	*	3	21
X1		PRIMARY ROD F190 (82484)		EA	1									3	22
P F		PACKING, PREFORMED: SECONDARY ROD F272 (82484)		EA	6	*	*	*	*	*	*	*	*	3	23
X1		SECONDARY ROD F196 (82484)		EA	1									3	24
X1		BODY F139 (82484)		EA	1									3	25
P F		PLUG, PIPE EX100-203 (82484)		EA	1	*	*	*	*	*	*	*	*	3	26
P F		SCREW, MACHINE: BODY, NO. 10-32 X 1 IN. LG C541 (82484)		EA	1	*	*	*	*	*	*	*	*	3	27
P F		SCREW, MACHINE: BODY, NO. 10-32 X 7/8 IN. LG C977 (82484)		EA	1	*	*	*	*	*	*	*	*	3	28
X1		BODY F104L (82484)		EA	1									3	29
X2F		BLOCK, BEARING F416 (82484)		EA	1									3	30
X1		BODY EX100-170 (82484)		EA	1									3	31
X1		BUSHING S656 (82484)		EA	1									3	32
P F		SPRING EX100-248 (82484)		EA	1	*	*	*	*	*	*	*	*	3	33

(1) SMR CODE	(2) FEDERAL STOCK NUMBER	(3) DESCRIPTION REF NUMBER & MFR CODE	USABLE ON CODE	(4) UNIT OF MEAS	(5) QTY INC IN UNIT	(6) 30-DAY DS MAINT ALLOWANCE (a) 1-20	(b) 21-50	(c) 51-100	(7) 30-DAY GS MAINT ALLOWANCE (a) 1-20	(b) 21-50	(c) 51-100	(8) 1-YR ALW PER 100 EQUIP CNTGY	(9) DEPOT MAINT ALW PER 100 EQUIP	(10) ILLUSTRATION (a) FIG. NO.	(b) ITEM NO.
P F		PIN, ROLL F319 (82484)		EA	1	*	*	*	*	*	*	*	*	3	34
P O		NUT, CLAMPING S1549 (82484)		EA	1	*	*	*	*	*	*	*	*	3	35
P O		NUT, PLAIN, HEXAGON: HANDLE S2225 (82484)		EA	1	*	*	*	*	*	*	*	*	3	36
P O		HANDLE, SHAFT S1082-1 (82484)		EA	1	*	*	*	*	*	*	*	*	3	37
P F		SLEEVE, SHAFT S658 (82484)		EA	1	*	*	*	*	*	*	*	*	3	38
X1		BUSHING S657 (82484)		EA	1									3	39
P F		GEAR, MACHINE F1058M (82484)		EA	1	*	*	*	*	*	*	*	*	3	40
X2F		CLUTCH, MACHINE F1059M (82484)		EA	1									3	41
P F		SHAFT, TRANSMISSION F865 (82484)		EA	1	*	*	*	*	*	*	*	*	3	42
X2F		PISTON ASSEMBLY GF157 (82484)		EA	1									3	43
P F	5330-198-6177	PACKING, PREFORMED F273 (82484)		EA	2	*	*	*	*	*	*	*	*	3	44
P F	2540-885-6095	SCREW C1433 (82484)		EA	2	*	*	*	*	*	*	*	*	3	45
X2F		ADAPTER, PACKING F768NS (82484)		EA	1									3	46
X2F		ADAPTER ASSEMBLY, PACKING EX100-239 (82484)		EA	1									3	47
X1		WASHER EX100-238 (82484)		EA	1									3	48
P F	3825-722-3229	PACKING, PREFORMED F288 (82484)		EA	1	*	*	*	*	*	*	*	*	3	49
X1		ADAPTER EX100-171 (82484)		EA	1									3	50
X2F		STOP, REVERSER: LH F765L (82484)		EA	1									3	51
X2F		STOP, REVERSER: RH F765R (82484)		EA	1									3	52
X2F		TEE, REVERSER F754M (82484)		EA	1									3	53
X2F		TURNBUCKLE F608 (82484)		EA	1									3	54
X2F		RACK, PISTON F1155 (82484)		EA	1									3	55
P O	5310-013-7718	NUT, SELF-LOCKING, HEXAGON: CAB MTG, 3/8-24 THD SIZE 21NE064 (72962)		EA	4	*	*	*	*	*	*	*	*	4	1
P O	5310-833-3340	WASHER, FLAT: CAB MTG, 3/8 IN.		EA	8	*	*	*	*	*	*	*	*	4	2
P O	5305-269-2803	SCREW, CAP, HEXAGON HEAD: CAB MTG, 3/8-24 X 1 IN. LG MS90726-60 (96906)		EA	4	*	*	*	*	*	*	*	*	4	3
P20		CAB ASSEMBLY 127388 (23382)		EA	1	*	*	*	*	*	*	*	*	4	4
P O	5310-975-2075	NUT, PLAIN, HEXAGON: HOOK MTG, 3/8-24 THD SIZE MS35691-21 (96906)		EA	4	*	*	*	*	*	*	*	*	4	5

(1) SMR CODE	(2) FEDERAL STOCK NUMBER	(3) DESCRIPTION REF NUMBER & MFR CODE	USABLE ON CODE	(4) UNIT OF MEAS	(5) QTY INC IN UNIT	(6) 30-DAY DS MAINT ALLOWANCE (a) 1-20	(b) 21-50	(c) 51-100	(7) 30-DAY GS MAINT ALLOWANCE (a) 1-20	(b) 21-50	(c) 51-100	(8) 1-YR ALW PER 100 EQUIP CNTGY	(9) DEPOT MAINT ALW PER 100 EQUIP	(10) ILLUSTRATION (a) FIG. NO.	(b) ITEM NO.
P O	5310-018-7123	WASHER, LOCK: HOOK MTG, 3/8 IN. 187123 (23382)		EA	4	*	*	*	*	*	*	*	*	4	6
P O	5305-269-2803	SCREW, CAP, HEXAGON HEAD: HOOK MTG, 3/8-24 X 1 IN. LG MS90726-60 (96906)		EA	4	*	*	*	*	*	*	*	*	4	7
X20		PLATE, BACKUP, HOOK 329826 (23382)		EA	2									4	8
X20		HOOK, CAB LIFTING 329825 (23382)		EA	2									4	9
P O	5310-851-2674	NUT, PLAIN, HEXAGON: DOME LIGHT MTG, 1/4-20 THD SIZE MS35691-1 (96906)		EA	2	*	*	*	*	*	*	*	*	4	10
P O	5310-249-1869	WASHER, LOCK: DOME LIGHT MTG, 1/4 IN. 4347 (41226)		EA	2	*	*	*	*	*	*	*	*	4	11
P O		SCREW, CAP, HEXAGON HEAD: DOME LIGHT MTG, 1/4-20 X 1 IN. LG 4653 (23382)		EA	2	*	*	*	*	*	*	*	*	4	12
P O		LIGHT, DOME 950FDS (71951)		EA	1	*	*	*	*	*	*	*	*	4	13
P O		SWITCH, DOME LIGHT 46501 (71951)		EA	1	*	*	*	*	*	*	*	*	4	14
P O		LENS: DOME LIGHT 36H (71951)		EA	1	*	*	*	*	*	*	*	*	4	15
P O	6240-044-6914	LAMP, INCANDESCENT: DOME LIGHT 1683 (08806)		EA	1	*	*	*	*	*	*	*	*	4	16
X1		BRACKET: DOME LIGHT 951 (71951)		EA	1									4	17
X20		CLIP: LH 313247 (23382)		EA	1									4	18
X20		CLIP: RH 316141 (23382)		EA	1									4	18
P O	5310-851-2674	NUT, PLAIN, HEXAGON: DOOR HINGE AND STRIKER MTG, 1/4-20 THD SIZE MS35691-1 (96906)		EA	8	*	*	*	*	*	*	*	*	4	19
P O	5310-209-1869	WASHER, LOCK: DOOR HINGE AND STRIKER MTG, 1/4 IN. 4347 (41226)		EA	8	*	*	*	*	*	*	*	*	4	20
P O		SCREW, MACHINE: DOOR HINGE AND STRIKER MTG, 1/4-20 X 1 IN. LG 162306 (23382)		EA	8	*	*	*	*	*	*	*	*	4	21
X20		PLATE, STRIKER 194984 (23382)		EA	1									4	22
P20		DOOR ASSEMBLY, CAB 330690 (23382)		EA	1	*	*	*	*	*	*	*	*	4	23
P O	5310-851-2674	NUT, PLAIN, HEXAGON: HINGE MTG, 1/4-20 THD SIZE MS35691-1 (96906)		EA	6	*	*	*	*	*	*	*	*	4	24
P O	5310-018-7241	WASHER, LOCK: HINGE MTG, 1/4 IN. 4312 (23382)		EA	6	*	*	*	*	*	*	*	*	4	25
P O	5310-209-1869	WASHER, LOCK: HINGE MTG, 1/4 IN. 4347 (41226)		EA	6	*	*	*	*	*	*	*	*	4	26
P O		SCREW, MACHINE: HINGE MTG, 1/4-20 X 1 1/2 IN. LG 30494 (23382)		EA	6	*	*	*	*	*	*	*	*	4	27
X20		HINGE, DOOR 329159 (23382)		EA	3									4	28

(1) SMR CODE	(2) FEDERAL STOCK NUMBER	(3) DESCRIPTION REF NUMBER & MFR CODE	USABLE ON CODE	(4) UNIT OF MEAS	(5) QTY INC IN UNIT	(6) 30-DAY DS MAINT ALLOWANCE (a) 1-20	(b) 21-50	(c) 51-100	(7) 30-DAY GS MAINT ALLOWANCE (a) 1-20	(b) 21-50	(c) 51-100	(8) 1-YR ALW PER 100 EQUIP CNTGY	(9) DEPOT MAINT ALW PER 100 EQUIP	(10) ILLUSTRATION (a) FIG. NO.	(b) ITEM NO.
P O		SCREW, MACHINE: HANDLE		EA	2	*	*	*	*	*	*	*	*	4	29
P O	2540-371-3259	HANDLE, DOOR 205266 (23382)		EA	1	*	*	*	*	*	*	*	*	4	30
P O		SCREW, MACHINE: LOCK MTG, NO. 10-32 X 5/8 IN. LG 162135 (23382)		EA	6	*	*	*	*	*	*	*	*	4	31
P O		LOCK, DOOR 321874 (23382)		EA	1	*	*	*	*	*	*	*	*	4	32
P O		GLASS, DOOR WINDOW 330688 (23382)		EA	1	*	*	*	*	*	*	*	*	4	33
P O		WEATHER STRIP: DOOR WINDOW, 10 FT 8 IN. REQUIRED AS788AS789 (98761)		FT	11	*	*	*	*	*	*	*	*	4	34
P O		WEATHER STRIP: CAB DOOR SEAL 194997 (23382)		FT	3	*	*	*	*	*	*	*	*	4	35
P O		WEATHER STRIP: CAB DOOR SEAL, 9 FT 8 IN. REQUIRED 204445 (23382)		FT	10	*	*	*	*	*	*	*	*	4	36
X1		PANEL 330824 (23382)		EA	1									4	37
P O		GLASS, FRONT WINOOW 330689 (23382)		EA	1	*	*	*	*	*	*	*	*	4	38
P O		GLASS, SIDE PANEL 330693 (23382)		EA	2	*	*	*	*	*	*	*	*	4	39
P O		GLASS, SIOE WINDOW 330688 (23382)		EA	1	*	*	*	*	*	*	*	*	4	40
P O		WEATHER STRIP: WINDOW AS788AS789 (98761)		FT	39	*	*	*	*	*	*	*	*	4	41
X2F		LIFT, FINGER 205-83 (71741)		EA	2									4	42
P F	5310-841-5594	NUT, PLAIN, HEXAGON: WINDOW FRAME MTG, NO. 10-32 THD SIZE		EA	7	*	*	*	*	*	*	*	*	4	43
P F	5310-688-2198	WASHER, LOCK: WINDOW FRAME MTG, NO. 10 SCREW SIZE		EA	7	*	*	*	*	*	*	*	*	4	44
P F	5305-835-9917	SCREW, MACHINE: WINDOW FRAME MTG, NO. 10-32 X 3/4 IN. LG		EA	7	*	*	*	*	*	*	*	*	4	45
X2F		FRAME, WINDOW: REAR 327083 (23382)		EA	1									4	46
P F		GLASS, SLIDING WINDOW 329092 (23382)		EA	2	*	*	*	*	*	*	*	*	4	47
P F		STRIPPING, GLASS CHANNEL A4264 (98761)		FT	24	*	*	*	*	*	*	*	*	4	48
X2F	5680-626-5918	CHANNEL, WEATHER 3K1 (82654)		FT	16									4	49
X2F		CHANNEL, OOUBLE RUN 3J4 (82654)		FT	83									4	50
X1		CAB 127386 (23382)		EA	1										
P O	4730-909-8627	CLAMP, HOSE: DEFROSTER MS35842-13 (96906)		EA	2	*	*	*	*	*	*	*	*	4	51
P O	4720-304-7444	HOSE, RUBBER: DEFROSTER 85686 (23382)		FT	2	*	*	*	*	*	*	*	*	4	52
P O		GROMMET, OEFROSTER 110-143 (24234)		EA	1	*	*	*	*	*	*	*	*	4	53

(1) SMR CODE	(2) FEDERAL STOCK NUMBER	(3) DESCRIPTION REF NUMBER & MFR CODE	USABLE ON CODE	(4) UNIT OF MEAS	(5) QTY INC IN UNIT	(6) 30-DAY DS MAINT ALLOWANCE (a) 1-20	(b) 21-50	(c) 51-100	(7) 30-DAY GS MAINT ALLOWANCE (a) 1-20	(b) 21-50	(c) 51-100	(8) 1-YR ALW PER 100 EQUIP CNTGY	(9) DEPOT MAINT ALW PER 100 EQUIP	(10) ILLUSTRATION (a) FIG. NO.	(b) ITEM NO.
P O		NUT, PLAIN, HEXAGON: DIFFUSER MTG, NO. 10-32 THD SIZE 6961 (23382)		EA	2	*	*	*	*	*	*	*	*	4	54
P O		WASHER, LOCK: DIFFUSER MTG, NO. 10 SCREW SIZE 164604 (23382)		EA	2	*	*	*	*	*	*	*	*	4	55
P O		SCREW, MACHINE: DIFFUSER MTG, NO. 10-32 X 3/8 IN. LG 161515 (23382)		EA	2	*	*	*	*	*	*	*	*	4	56
P O		DIFFUSER ASSEMBLY, DEFROST 3719 (24234)		EA	1	*	*	*	*	*	*	*	*	4	57
P O	5360-353-6438	SPRING, VENT DOOR 1774 (23382)		EA	2	*	*	*	*	*	*	*	*	4	58
P O	5315-839-2325	PIN, COTTER: VENT CONTROL MS24665-132 (96906)		EA	2	*	*	*	*	*	*	*	*	4	59
P O		WASHER, FLAT: VENT CONTROL, 3/16 IN. 6131 (23382)		EA	2	*	*	*	*	*	*	*	*	4	60
X20		LEVER, VENT CONTROL: LH 330877 (23382)		EA	1									4	61
X20		LEVER, VENT CONTROL: RH 330878 (23382)		EA										4	61
P O		NUT, PLAIN, HEXAGON: VENT DOOR MTG, NO. 10-32 THD SIZE 6961 (23382)		EA	26	*	*	*	*	*	*	*	*	4	62
P O		WASHER, LOCK: VENT DOOR MTG, NO. 10 SCREW SIZE 164604 (23382)		EA	26	*	*	*	*	*	*	*	*	4	63
P O		SCREW, MACHINE: VENT DOOR MTG, NO. 10-32 X 3/8 IN. LG 161515 (23382)		EA	26	*	*	*	*	*	*	*	*	4	64
X20		DOOR ASSEMBLY: RH VENT 330691 (23382)		EA	1									4	65
X20		DOOR ASSEMBLY: LH VENT 330692 (23382)		EA	1									4	65
X20		FRAME, VENT 332014 (23382)		EA	2									4	66
P O		SCREW, TAPPING, THREAD CUTTING: FLOOR MTG, NO. 10-24 X 5/8 IN. LG 160515 (23382)		EA	18	*	*	*	*	*	*	*	*	4	67
P O		WASHER, LOCK: FLOOR MTG, NO. 10 SCREW SIZE 164604 (23382)		EA	18	*	*	*	*	*	*	*	*	4	68
X20		PLATE, FLOOR: REAR 330851 (23382)		EA	1									4	69
X20		PLATE, FLOOR: FRONT 330850 (23382)		EA	1									4	70
P O		TAPE, ELASTIC 531740 (23382)		FT	155	*	*	*	*	*	*	*	*	4	71
P F	3810-830-7758	SEAL, BODY PANEL 1017021 (23382)		FT	18	*	*	*	*	*	*	*	*	4	72
X2F		BASE, CAB 330694 (23382)		EA	1									4	73
P O	2540-744-1345	KIT, SEAT BELT 198891 (23382)		EA	1	*	*	*	*	*	*	*	*	5	1
X1		LAP BELT KIT 30847 (23382)		EA	1									5	2
X1		SEAT TO FLOOR KIT 30848 (23382)		EA	1									5	3

(1) SMR CODE	(2) FEDERAL STOCK NUMBER	(3) DESCRIPTION REF NUMBER & MFR CODE	USABLE ON CODE	(4) UNIT OF MEAS	(5) QTY INC IN UNIT	(6) 30-DAY OS MAINT ALLOWANCE (a) 1-20	(b) 21-50	(c) 51-100	(7) 30-DAY GS MAINT ALLOWANCE (a) 1-20	(b) 21-50	(c) 51-100	(8) 1-YR ALW PER 100 EQUIP CNTGY	(9) DEPOT MAINT ALW PER 100 EQUIP	(10) ILLUSTRATION (a) FIG. NO.	(b) ITEM NO.
P O		SEAT ASSEMBLY, OPERATORS 8576016 (97532)		EA	1	*	*	*	*	*	*	*	*	5	
X2F		SCREW, ASSEMBLED WASHER: SEAT AND BACK MTG 1770290 (97532)		EA	6									5	4
X2F		BRACKET, FRONT: LH 2158143 (97532)		EA	1									5	5
X2F		BRACKET, FRONT: RH 2158144 (97532)		EA	1									5	6
P F		SCREW, ASSEMBLED WASHER: HANDLE MTG, NO. 10-24 X 3/4 IN. LG 1770005 (97532)		EA	4	*	*	*	*	*	*	*	*	5	7
X2F		HANDLE 2129101 (97532)		EA	1									5	8
P F		CUSHION ASSEMBLY, SEAT 2159361 (97532)		EA	1	*	*	*	*	*	*	*	*	5	9
P F		BACK ASSEMBLY 2161601 (97532)		EA	1	*	*	*	*	*	*	*	*	5	10
P F		VALVE, AIR CONTROL WM397 (97532)		EA	1	*	*	*	*	*	*	*	*	5	11
P F		NUT, SELF-LOCKING HEXAGON: SEAT AND BRACKET MTG, 5/16-24 THD SIZE 1770091 (97532)		EA	12	*	*	*	*	*	*	*	*	5	12
P F		WASHER, FLAT: SEAT AND TRACK, 5/16 IN. 1770072 (97532)		EA	8	*	*	*	*	*	*	*	*	5	13
P F		SCREW, CAP, HEXAGON HEAD: FRAME, 5/16-24 X 7/8 IN. LG 1770293 (97532)		EA	4	*	*	*	*	*	*	*	*	5	14
X2F		SPRING: SEAT HANDLE 2112573 (97532)		EA	1									5	15
X2F		TRACK ASSEMBLY: LH 3147561 (97532)		EA	1									5	16
X2F		TRACK ASSEMBLY: RH 3123443 (97532)		EA	1									5	17
X1		CLIP CC126 (73287)		EA	1									5	18
X2F		FRAME ASSEMBLY 3148511 (97532)		EA	1									5	19
P F		PIN, PIVOT 2157813 (97532)		EA	1	*	*	*	*	*	*	*	*	5	20
P F		PIN, PIVOT 2147533 (97532)		EA	1	*	*	*	*	*	*	*	*	5	21
P F		WASHER, PLAIN: SPRING RETAINING 2147543 (97532)		EA	1	*	*	*	*	*	*	*	*	5	22
P F		SPRING, HELICAL: FRAME 2147553 (97532)		EA	1	*	*	*	*	*	*	*	*	5	23
X1		FRAME ASSEMBLY: UPPER 3148481 (97532)		EA	1									5	24
P F		SPRING, HANDLE RETURN 2157853 (97532)		EA	1	*	*	*	*	*	*	*	*	5	25
P F		RING, LOCK: HANDLE MTG 5555-372F (79136)		EA	1	*	*	*	*	*	*	*	*	5	26
X1		HANDLE ASSEMBLY 2147511 (97532)		EA	1									5	27

(1) SMR CODE	(2) FEDERAL STOCK NUMBER	(3) DESCRIPTION REF NUMBER & MFR CODE	USABLE ON CODE	(4) UNIT OF MEAS	(5) QTY INC IN UNIT	(6) 30-DAY GS MAINT ALLOWANCE (a) 1-20	(b) 21-50	(c) 51-100	(7) 30-DAY GS MAINT ALLOWANCE (a) 1-20	(b) 21-50	(c) 51-100	(8) 1-YR ALW PER 100 EQUIP CNTGY	(9) DEPOT MAINT ALW PER 100 EQUIP	(10) ILLUSTRATION (a) FIG. NO.	(b) ITEM NO.
X1		FRAME ASSEMBLY: LOWER 3148471 (97532)		EA	1									5	28
X1		BASE ASSEMBLY, SEAT 4123331 (97532)		EA	1									5	29
P F		NUT, PLAIN, HEXAGON: SHOCK ABSORBER MTG, 3/8-24 THD SIZE 1770178 (97532)		EA	2	*	*	*	*	*	*	*	*	5	30
P F		SCREW, CAP, HEXAGON HEAD: SHOCK ABSORBER MTG, 3/8-24 X 1 3/4 IN. LG 1770039 (97532)		EA	2	*	*	*	*	*	*	*	*	5	31
X2F		TUBE, SPACER 2112313 (97532)		EA	2									5	32
P F		SHOCK ABSORBER ASSEMBLY 610495 (76110)		EA	1	*	*	*	*	*	*	*	*	5	33
P F		BUSHING, NYLON 2112253 (97532)		EA	4	*	*	*	*	*	*	*	*	5	34
P F		SCREW, CAP, HEXAGON HEAD: AIR SPRING MTG, 3/8-16 X 5/8 IN. LG 1770040 (97532)		EA	1	*	*	*	*	*	*	*	*	5	35
P F		WASHER, LOCK: AIR SPRING MTG, 3/8 IN. 1770082 (97532)		EA	1	*	*	*	*	*	*	*	*	5	36
P F	5310-655-9544	NUT, PLAIN, HEXAGON: AIR SPRING MTG MS35690-604 (96906)		EA	1	*	*	*	*	*	*	*	*	5	37
P F		WASHER, FLAT: AIR SPRING 2123411 (97532)		EA	1	*	*	*	*	*	*	*	*	5	38
P F		SPRING ASSEMBLY, AIR GYRL400 (73842)		EA	1	*	*	*	*	*	*	*	*	5	39
P F		BUMPER, RUBBER 2123423 (97532)		EA	2	*	*	*	*	*	*	*	*	5	40
P O		HOSE ASSEMBLY: AIR 2113863 (97532)		EA	1	*	*	*	*	*	*	*	*	5	41
P O	4730-810-0059	ELBOW, PIPE: AIR HOSE W3400X2 (79470)		EA	2	*	*	*	*	*	*	*	*	5	42
P O		GROMMET, RUBBER: AIR HOSE 2761 (70485)		EA	1	*	*	*	*	*	*	*	*	5	43
P F		PIN, ROLL: SHAFT, 1/8 IN. DIA, 7/8 IN. LG 1770108 (97532)		EA	4	*	*	*	*	*	*	*	*	5	44
P F		WASHER, THRUST: SHAFT 2123393 (97532)		EA	8	*	*	*	*	*	*	*	*	5	45
X2F		SHAFT, BEARING, FRONT 2157791 (97532)		EA	2									5	46
X2F		SHAFT, BEARING, REAR 2157781 (97532)		EA	2									5	47
X2F		UPPER FRAME AND SEAT SUPPORT ASSEMBLY 4123351 (97532)		EA	1									5	48
X2F		UPPER ARM AND TUBE ASSEMBLY 3123371 (97532)		EA	1									5	49
X2F		LOWER ARM AND TUBE ASSEMBLY 3123361 (97532)		EA	1									5	50
X2F		FRAME ASSEMBLY, LOWER 4123341 (97532)		EA	1									5	51

(1) SMR CODE	(2) FEDERAL STOCK NUMBER	(3) DESCRIPTION REF NUMBER & MFR CODE	USABLE ON CODE	(4) UNIT OF MEAS	(5) QTY INC IN UNIT	(6) 30-DAY DS MAINT ALLOWANCE (a) 1-20	(b) 21-50	(c) 51-100	(7) 30-DAY GS MAINT ALLOWANCE (a) 1-20	(b) 21-50	(c) 51-100	(8) 1-YR ALW PER 100 EQUIP CNTGY	(9) DEPOT MAINT ALW PER 100 EQUIP	(10) ILLUSTRATION (a) FIG. NO.	(b) ITEM NO.
X20		BOX, FRESH AIR INLET 330708 (23382)		EA	1									5	
X20		BRACKET, FRESH AIR BOX 329850 (23382)		EA	2									5	
X20		BUTTON, PLUG: HEATER XS51020 (90763)		EA	1									5	
P O		CLAMP, HOSE 4-1-4 (70403)		EA	10	*	*	*	*	*	*	*	*	5	
P O		CONTROL ASSEMBLY, VENT 64-032-473 (70436)		EA	1	*	*	*	*	*	*	*	*	5	
P O		ELBOW, HEATER 7810 (24234)		EA	2	*	*	*	*	*	*	*	*	5	
P O		FITTING, SWIVEL CR134-5-45 (79960)		EA	1	*	*	*	*	*	*	*	*	5	
P O	5325-954-3828	GROMMET, RUBBER 2853 (70485)		EA	1	*	*	*	*	*	*	*	*	5	
P O		HOSE, RUBBER 4230A (24161)		FT	34	*	*	*	*	*	*	*	*	5	
X20		KNOB 1903711 (16764)		EA	1									5	
P O		NUT, PLAIN, HEXAGON: NO. 8-32 THD SIZE 1911 (23382)		EA	2	*	*	*	*	*	*	*	*	5	
P O		NUT, PLAIN, HEXAGON: 5/16-24 THD SIZE 4202 (23382)		EA	4	*	*	*	*	*	*	*	*	5	
P O		NUT, PLAIN, HEXAGON: SPACER MTG, 5/16-18 THD SIZE 4217 (23382)		EA	3	*	*	*	*	*	*	*	*	5	
P O		NUT, PLAIN, HEXAGON: NO. 10-32 THD SIZE 6961 (23382)		EA	8	*	*	*	*	*	*	*	*	5	
P O	5315-839-2325	PIN, COTTER MS24665-132 (96906)		EA	1	*	*	*	*	*	*	*	*	5	
X20		ROD, FRESH AIR CONTROL 329258 (23382)		EA	1									5	
P O		RUBBER STRIP: AIR INLET BOX 201902 (23382)		FT	9	*	*	*	*	*	*	*	*	5	
P O	5306-225-9089	BOLT, MACHINE: 5/16-24 X 1 IN. LG MS40726-34 (96906)		EA	4	*	*	*	*	*	*	*	*	5	
P O	5305-984-6193	SCREW, MACHINE: NO. 8-32 X 1/2 IN. LG MS35206-245 (96906)		EA	2	*	*	*	*	*	*	*	*	5	
P O		SCREW, MACHINE: NO. 10-32 X 3/8 IN. LG 161515 (23382)		EA	8	*	*	*	*	*	*	*	*	5	
P O	5305-272-5552	SCREW, MACHINE: TUBE CLAMP T858-7 (79960)		EA	1	*	*	*	*	*	*	*	*	5	
P O	5305-531-2030	SETSCREW: NO. 8-32 THD SIZE 1888135 (16764)		EA	1	*	*	*	*	*	*	*	*	5	
X20		SPACER 316608 (23382)		EA	3									5	
P O		TUBING, COPPER, HEATER 134158 (23382)		EA	2	*	*	*	*	*	*	*	*	5	
P O		VALVE, HEATER H1218 (95406)		EA	1	*	*	*	*	*	*	*	*	5	
P O		WASHER, FLAT: 3/16 IN. 6131 (23382)		EA	5	*	*	*	*	*	*	*	*	5	

(1) SMR CODE	(2) FEDERAL STOCK NUMBER	(3) DESCRIPTION REF NUMBER & MFR CODE	USABLE ON CODE	(4) UNIT OF MEAS	(5) QTY INC IN UNIT	(6) 30-DAY DS MAINT ALLOWANCE (a) 1-20	(b) 21-50	(c) 51-100	(7) 30-DAY GS MAINT ALLOWANCE (a) 1-20	(b) 21-50	(c) 51-100	(8) 1-YR ALW PER 100 EQUIP CNTGY	(9) DEPOT MAINT ALW PER 100 EQUIP	(10) ILLUSTRATION (a) FIG. NO.	(b) ITEM NO.
P O	5310-193-7491	WASHER, LOCK: NO. 8 SCREW SIZE 1208 (78189)		EA	2	*	*	*	*	*	*	*	*	5	
P O		WASHER, LOCK: NO. 10 SCREW SIZE 164604 (23382)		EA	8	*	*	*	*	*	*	*	*	5	
P O		WASHER, LOCK: SPACER MTG, 5/16 IN. 4318 (23382)		EA	7	*	*	*	*	*	*	*	*	5	
		GROUP 03 - VEHICULAR LIGHTS													
P O		SCREW, CAP, HEXAGON HEAD: EXTENSION LIGHT MTG, 3/8-16 X 7/8 IN. LG 1349 (13841)		EA	2	*	*	*	*	*	*	*	*	6	1
P O	5310-018-7123	WASHER, LOCK: EXTENSION LIGHT MTG, 3/8 IN. 187123 (24617)		EA	2	*	*	*	*	*	*	*	*	6	2
P O		LIGHT, EXTENSION 01-13435AH (80538)		EA	1	*	*	*	*	*	*	*	*	6	3
P O	6240-951-8989	LAMP, INCANDESCENT: EXTENSION LIGHT 4318 (08805)		EA	1	*	*	*	*	*	*	*	*	6	4
P O	5930-105-5474	SWITCH, TRIGGER: EXTENSION LIGHT SA4473 (80538)		EA	1	*	*	*	*	*	*	*	*	6	5
X20		PIN, LOCK: LIGHT AN415-2 (88044)		EA	1									6	6
X20		CHAIN, TWIST-LINK: WELDED STEEL, TYPE 1, GRADE C, CLASS 5, STYLE 1, PER RRC-271, 3/32 X 8 IN. LG		EA	1									6	7
X20		REEL, LIGHT CORD RIAH35 (80538)		EA	1									6	8
P O	6220-577-3434	LIGHT, MARKER, CLEARANCE: FRONT, AMBER MS35423-1 (96906) (COMPONENTS SAME AS LAMP, FSN 6220-727-3288)		EA	5	*	*	*	*	*	*	*	*	7	1
P O	6220-577-3435	LIGHT, MARKER, CLEARANCE: BLACKOUT, FRONT MS35424-1 (96906) (COMPONENTS SAME AS LAMP, FSN 6220-727-3288)		EA	2	*	*	*	*	*	*	*	*	7	1
P O	6220-726-1916	LAMP, CLEARANCE: RED MS35423-2 (96906) (COMPONENTS SAME AS LAMP, FSN 6220-727-3288)		EA	7	*	*	*	*	*	*	*	*	7	1
P O	6220-727-3288	LAMP, CLEARANCE: BLACKOUT: REAR MS35424-2 (96906)		EA	4	*	*	*	*	*	*	*	*	7	1
P O	6240-019-0877	LAMP, INCANDESCENT MS15570-251 (96906)		EA	18	*	*	*	*	*	*	*	*	7	2
P O		SCREW, CAP, HEXAGON HEAD: HEADLIGHT MTG, 5/8-17 X 2 1/4 IN. LG 3994 (23382)		EA	4	*	*	*	*	*	*	*	*	8	1
P O		SCREW, CAP, HEXAGON HEAD: LIGHT MTG, 5/8-11 X 2 IN. LG 1170 (13841)		EA	4	*	*	*	*	*	*	*	*	8	1
P O	5310-820-6653	WASHER, LOCK: HEADLIGHT MTG, 5/8 IN. MS35338-50 (96906)		EA	4	*	*	*	*	*	*	*	*	8	2
P O	5310-820-6653	WASHER, LOCK: LIGHT MTG, 5/8 IN. MS35338-50 (96906)		EA	4	*	*	*	*	*	*	*	*	8	2

		REF NUMBER & MFR CODE	ON CODE	UNIT OF MEAS	INC IN UNIT	1-20	21-50	51-100	1-20	21-50	51-100	100 EQUIP CNTGY	PER 100 EQUIP	FIG. NO.	ITEM NO.
X20		YOKE, HEADLIGHT MOUNTING 333765 (23382)		EA	4									8	3
X20	3810-756-1109	YOKE, MOUNTING: FLOOD AND SPOTLIGHT 20271 (13841)		EA	4									8	3
P O	5310-269-4052	NUT, PLAIN, HEXAGON: LAMP MTG, 5/8-18 THD SIZE		EA	8	*	*	*	*	*	*	*	*	8	4
X20	6220-725-6893	SPOTLIGHT, CRANE M12877 (74400) (COMPONENTS SAME AS FLOODLIGHT, FSN 6220-953-4652, EXCEPT WHERE INDIVIDUALLY ANNOTATED)		EA	2									8	5
P O		HEADLIGHT, SERVICE 4499R5133 (74400) (COMPONENTS SAME AS FLOODLIGHT, FSN 6220-953-4652, EXCEPT WHERE INDIVIDUALLY ANNOTATED)		EA	4	*	*	*	*	*	*	*	*	8	5
X20	6220-953-4652	FLOODLIGHT, CRANE M12875 (74400)		EA	2									8	5
X20	6220-788-9943	RETAINER, LAMP 5133 (74400)		EA	8									8	6
P O	6240-727-8573	LAMP, INCANDESCENT: SPOTLIGHT MS17116-4880GE (96906) (U/W SPOTLIGHT, FSN 6220-725-6893 AND HEADLIGHT, P/N 4499R5133 (74400), ONLY)		EA	6	*	*	*	*	*	*	*	*	8	7
P O	6240-643-0687	LAMP, INCANDESCENT: FLOODLIGHT 45786E (08805) (U/W FLOODLIGHT, FSN 6220-953-4652, ONLY)		EA	2	*	*	*	*	*	*	*	*	8	7
P O	5935-436-2490	PLUG ASSEMBLY: HEADLAMP 3051 (13445)		EA	4	*	*	*	*	*	*	*	*	8	7A
P O	5310-934-9751	NUT, PLAIN, HEXAGON: LIGHT MTG, NO. 10-32 THD SIZE MS35650-302 (96906)		EA	12	*	*	*	*	*	*	*	*	8	8
P O	5310-045-3296	WASHER, LOCK: LIGHT MTG, NO. 10 SCREW SIZE MS35388-48 (96906)		EA	12	*	*	*	*	*	*	*	*	8	9
P O	5305-993-1848	SCREW, MACHINE: LIGHT MTG, NO. 10-32 X 3/4 IN. LG MS35207-265 (96906)		EA	12	*	*	*	*	*	*	*	*	8	10
P O	6220-731-5920	LIGHT, SERVICE: FRONT 950STAMBER (71951) (COMPONENTS SAME AS LIGHT, P/N 950STRED (71951), EXCEPT WHERE INDIVIDUALLY ANNOTATED)		EA	2	*	*	*	*	*	*	*	*	8	11
P O		LIGHT, SERVICE, REAR 950STRED (71951)		EA	2	*	*	*	*	*	*	*	*	8	11
P O	6220-890-5907	LENS, AMBER 42012AMBER (71951) (U/W LIGHT, FSN 6220-731-5920, ONLY)		EA	2	*	*	*	*	*	*	*	*	8	12
P O	6220-491-5350	LENS, RED 42012RED (71951) (U/W LIGHT, FSN 6220-731-5890, ONLY)		EA	2									8	12
P O	6240-877-3405	LAMP, INCANDESCENT 1662 (08805)		EA	4	*	*	*	*	*	*	*	*	8	13
P O	5310-017-4857	NUT, PLAIN, HEXAGON: REFLECTOR MTG, 1/4-20 THD SIZE		EA	8	*	*	*	*	*	*	*	*	8	14
P O	5310-018-7241	WASHER, LOCK: REFLECTOR MTG, 1/4 IN.		EA	8	*	*	*	*	*	*	*	*	8	15

	NUMBER	REF NUMBER & MFR CODE	ON CODE	UNIT OF MEAS	IN UNIT	1-20	21-50	51-100	1-20	21-50	51-100	EQUIP CNTGY	100 EQUIP	FIG. NO.	ITEM NO.
P O	5305-068-0502	SCREW, CAP, HEXAGON HEAD: REFLECTOR MTG, 1/4-20 X 3/4 IN. LG		EA	8	*	*	*	*	*	*	*	*	8	16
P O	9905-205-2795	REFLECTOR, RED MS35387-1 (96906)		EA	4	*	*	*	*	*	*	*	*	8	17
P O	9905-202-3639	REFLECTOR, AMBER MS35387-2 (96906)		EA	4	*	*	*	*	*	*	*	*	8	17
P O	6220-678-9046	HEADLIGHT, BLACKOUT MS51318-1 (96906)		EA	1	*	*	*	*	*	*	*	*	9	1
P O	5305-993-1848	SCREW, MACHINE: LAMP UNIT MTG MS35207-265 (96906)		EA	3	*	*	*	*	*	*	*	*	9	2
P O	6220-819-7028	LAMP UNIT, HEADLIGHT 8747987 (00000)		EA	1	*	*	*	*	*	*	*	*	9	3
P O	6220-571-6855	LIGHT, MARKER, BLACKOUT: FRONT MS51303-1 (96906)		EA	2	*	*	*	*	*	*	*	*	9	4
P O	5305-984-6193	SCREW, MACHINE: LAMP MS35206-245 (96906)		EA	4	*	*	*	*	*	*	*	*	9	5
P O	6240-019-0877	LAMP, INCANDESCENT MS15570-251 (96906)		EA	2	*	*	*	*	*	*	*	*	9	6
P O	5310-017-4851	NUT, PLAIN, HEXAGON: BRACKET MTG, 1/4-20 THD SIZE		EA	4	*	*	*	*	*	*	*	*	9	7
P O	5310-082-0650	WASHER, LOCK: BRACKET MTG, 1/4 IN.		EA	4	*	*	*	*	*	*	*	*	9	8
P O	5305-225-3839	SCREW, CAP, HEXAGON HEAD: BRACKET MTG, 1/4-20 X 1 IN. LG 1778 (13841)		EA	4	*	*	*	*	*	*	*	*	9	9
P O	5305-269-3209	SCREW, CAP, HEXAGON HEAD: LAMP MTG, 3/8-16 X 3/4 IN. LG		EA	4	*	*	*	*	*	*	*	*	9	10
P O	5310-680-7297	WASHER, LOCK: LAMP MTG, 3/8 IN.		EA	4	*	*	*	*	*	*	*	*	9	11
X20		BRACKET, LAMP: COMBINATION BLACKOUT 329742 (23382)		EA	2									9	12
P O	6220-337-6471	STOP LIGHT-TAILLIGHT, BLACKOUT MS51330-1 (96906)		EA	2	*	*	*	*	*	*	*	*	9	13
P O	6240-019-0877	LAMP, INCANDESCENT MS15570-251 (96906)		EA	4	*	*	*	*	*	*	*	*	9	14
		GROUP 04 - HYDRAULIC LINES AND FITTINGS													
P O	5310-208-1919	NUT, SELF-LOCKING, HEXAGON: BAR CLAMP MTG, 1/4-20 THD SIZE 29E040 (13257)		EA	8	*	*	*	*	*	*	*	*	10	1
P O	5310-209-1869	WASHER, LOCK: BAR CLAMP MTG, 1/4 IN. 1885 (13841)		EA	8	*	*	*	*	*	*	*	*	10	2
P O		SCREW, CAP, HEXAGON HEAD: BAR CLAMP MTG, 1/4-20 X 2 IN. LG 1302 (13841)		EA	8	*	*	*	*	*	*	*	*	10	3
X20		BAR, CLAMP: TUBING 17174 (13841)		EA	4									10	4
P O	5310-012-4818	NUT, PLAIN, HEXAGON: HANGER BRACKET MTG, 1/4-20 THD SIZE		EA	2	*	*	*	*	*	*	*	*	10	5
P O	5310-209-1869	WASHER, LOCK: HANGER BRACKET MTG, 1/4 IN. 1885 (13841)		EA	2	*	*	*	*	*	*	*	*	10	6
P O	5305-225-3839	SCREW, CAP, HEXAGON HEAD: HANGER BRACKET MTG, 1/4-20 X 1 IN. LG 1778 (13841)		EA	2	*	*	*	*	*	*	*	*	10	7
X20		HANGER BRACKET: BAR CLAMP 17177 (13841)		EA	1									10	8

(1) SMR CODE	(2) FEDERAL STOCK NUMBER	(3) DESCRIPTION REF NUMBER & MFR CODE	USABLE ON CODE	(4) UNIT OF MEAS	(5) QTY INC IN UNIT	(6) 30-DAY DS MAINT ALLOWANCE (a) 1-20	(b) 21-50	(c) 51-100	(7) 30-DAY GS MAINT ALLOWANCE (a) 1-20	(b) 21-50	(c) 51-100	(8) 1-YR ALW PER 100 EQUIP CNTGY	(9) DEPOT MAINT ALW PER 100 EQUIP	(10) ILLUSTRATION (a) FIG. NO.	(b) ITEM NO.
P O	5310-208-1919	NUT, SELF-LOCKING, HEXAGON: BAR CLAMP MTG, 1/4-20 THD SIZE 29E040 (13257)		EA	2	*	*	*	*	*	*	*	*	10	9
P O	5310-209-1869	WASHER, LOCK: BAR CLAMP MTG, 1/4 IN. 1885 (13841)		EA	2	*	*	*	*	*	*	*	*	10	10
P O		SCREW, CAP, HEXAGON HEAD: BAR CLAMP MTG, 1/4-20 X 2 IN. LG 1302 (13841)		EA	2	*	*	*	*	*	*	*	*	10	11
X20		BAR, CLAMP: TUBING 17175 (13841)		EA	1									10	12
P O	5310-012-4818	NUT, PLAIN, HEXAGON: BAR CLAMP MTG, 1/4-20 THD SIZE		EA	1	*	*	*	*	*	*	*	*	10	13
P O	5310-209-1869	WASHER, LOCK: BAR CLAMP MTG, 1/4 IN. 1885 (13841)		EA	1	*	*	*	*	*	*	*	*	10	14
P O	5305-225-3839	SCREW, CAP, HEXAGON HEAD: BAR CLAMP MTG, 1/4-20 X 1 IN. LG 1778 (13841)		EA	1	*	*	*	*	*	*	*	*	10	15
X20		BAR, CLAMP: TUBING 17171 (13841)		EA	1									10	16
P O	5310-208-1919	NUT, SELF-LOCKING, HEXAGON: BAR CLAMP MTG, 1/4-20 THD SIZE 29E040 (13257)		EA	8	*	*	*	*	*	*	*	*	10	17
P O		SCREW, CAP, HEXAGON HEAD: BAR CLAMP MTG, 1/4-20 X 2 1/4 IN. LG 1303 (13841)		EA	6	*	*	*	*	*	*	*	*	10	18
P O		SCREW, CAP, HEXAGON HEAD: BAR CLAMP MTG, 1/4-20 X 2 1/2 IN. LG 1304 (13841)		EA	2	*	*	*	*	*	*	*	*	10	19
X20		BAR, CLAMP: TUBING 17172 (13841)		EA	4									10	20
P O	5310-208-1919	NUT, SELF-LOCKING, HEXAGON: BAR CLAMP MTG, 1/4-20 THD SIZE 29E040 (13257)		EA	1	*	*	*	*	*	*	*	*	10	21
P O		SCREW, CAP, HEXAGON HEAD: BAR CLAMP MTG, 1/4-20 X 2 IN. LG 1302 (13841)		EA	1	*	*	*	*	*	*	*	*	10	22
X20		BAR, CLAMP: TUBING 17170 (13841)		EA	1									10	23
P O	5310-208-1919	NUT, SELF-LOCKING, HEXAGON: BAR CLAMP MTG, 1/4-20 THD SIZE 29E040 (13257)		EA	2	*	*	*	*	*	*	*	*	10	24
P O		SCREW, CAP, HEXAGON HEAD: BAR CLAMP MTG, 1/4-20 X 2 1/4 IN. LG 1303 (13841)		EA	2	*	*	*	*	*	*	*	*	10	25
X20		BAR, CLAMP: TUBING 17173 (13841)		EA	1									10	26
P O	5310-208-1919	NUT, SELF-LOCKING, HEXAGON: BAR CLAMP MTG, 1/4-20 THD SIZE 29E040 (13257)		EA	2	*	*	*	*	*	*	*	*	10	27
P O		SCREW, CAP, HEXAGON HEAD: BAR CLAMP MTG, 1/4-20 X 2 IN. LG 1302 (13841)		EA	2	*	*	*	*	*	*	*	*	10	28
X20		BAR, CLAMP: TUBING 17176 (13841)		EA	1									10	29
P O		NUT, PLAIN, HEXAGON: OIL FILTER COVER MTG, 1/2-13 THD SIZE 9085 (13841)		EA	3	*	*	*	*	*	*	*	*	10	30
P O		WASHER, LOCK: OIL FILTER COVER MTG, 1/2 IN. 8729 (13841)		EA	3	*	*	*	*	*	*	*	*	10	31

(1) SMR CODE	(2) FEDERAL STOCK NUMBER	(3) DESCRIPTION REF NUMBER & MFR CODE	USABLE ON CODE	(4) UNIT OF MEAS	(5) QTY INC IN UNIT	(6) 30-DAY DS MAINT ALLOWANCE (a) 1-20	(b) 21-50	(c) 51-100	(7) 30-DAY GS MAINT ALLOWANCE (a) 1-20	(b) 21-50	(c) 51-100	(8) 1-YR ALW PER 100 EQUIP CNTGY	(9) DEPOT MAINT ALW PER 100 EQUIP	(10) ILLUSTRATION (a) FIG. NO.	(b) ITEM NO.
P 0		SCREW, CAP, HEXAGON HEAD: OIL FILTER COVER MTG, 1/2-13 X 1 1/2 IN. LG 1108 (13841)		EA	3	*	*	*	*	*	*	*	*	10	32
X20		COVER, OIL FILTER 17102 (13841)		EA	1									10	33
P 0		NUT, PLAIN, HEXAGON: BELLY PAN MTG, 1/2-13 THD SIZE 9085 (13841)		EA	4	*	*	*	*	*	*	*	*	10	34
P 0		WASHER, LOCK: BELLY PAN MTG, 1/2 IN. 8729 (13841)		EA	4	*	*	*	*	*	*	*	*	10	35
P 0		SCREW, CAP, HEXAGON HEAD: BELLY PAN MTG, 1/2-13 X 1 1/2 IN. LG 1108 (13841)		EA	4	*	*	*	*	*	*	*	*	10	36
X20		PAN, BELLY, CENTER 17101 (13841)		EA	1									10	37
P 0	5310-012-4818	NUT, PLAIN, HEXAGON: LINE GUARD MTG, 1/4-20 THD SIZE		EA	2	*	*	*	*	*	*	*	*	10	38
P 0	5310-209-1869	WASHER, LOCK: LINE GUARD MTG, 1/4 IN. 1885 (13841)		EA	2	*	*	*	*	*	*	*	*	10	39
P 0	5305-225-3839	SCREW, CAP, HEXAGON HEAD: LINE GUARD MTG, 1/4-20 X 1 IN. LG 1778 (13841)		EA	2	*	*	*	*	*	*	*	*	10	40
X20		GUARD, HYDRAULIC LINES 19000 (13841)		EA	1									10	41
P 0	5310-208-5280	NUT, PLAIN, HEXAGON: MUD GUARD MTG, NO. 10-24 THD SIZE		EA	4	*	*	*	*	*	*	*	*	10	42
P 0	5310-012-0217	WASHER, LOCK: MUD GUARD MTG, NO. 10 SCREW SIZE 4300 (23382)		EA	4	*	*	*	*	*	*	*	*	10	43
P 0	5305-819-8736	SCREW, CAP, HEXAGON HEAD: MUD GUARD MTG, NO. 10-24 X 3/4 IN. LG		EA	4	*	*	*	*	*	*	*	*	10	44
X20		GUARD, MUD 19002 (13841)		EA	1									10	45
X20		GUARD, HYDRAULIC LINE 17100 (13841)		EA	1									10	46
P 0		FASTENER, DZVS AJ7-70 (72794)		EA	3	*	*	*	*	*	*	*	*	10	47
P20		TUBE ASSEMBLY: REVOLVING JOINT TO HOSE 54309 (13841)		EA	1	*	*	*	*	*	*	*	*	11	1
P20		TUBE ASSEMBLY: REVOLVING JOINT TO HOSE 54307 (13841)		EA	1	*	*	*	*	*	*	*	*	11	2
P20		TUBE ASSEMBLY: REVOLVING JOINT TO HOSE 54308 (13841)		EA	1	*	*	*	*	*	*	*	*	11	3
P20		TUBE ASSEMBLY: REVOLVING JOINT TO HOSE 54305 (13841)		EA	1	*	*	*	*	*	*	*	*	11	4
M 0		HOSE ASSEMBLY R2-12-12FHRC12FH38 (99103) MANUFACTURE FROM:		EA	4									11	5
P 0		HOSE, RUBBER, 3/4 IN. REQUIRED FOR EA HOSE ASSEMBLY R2-12 (99103)				*	*	*	*	*	*				
P 0	4730-203-3551	COUPLING, HOSE R2-12-12FHRC (99103)				*	*	*	*	*	*				

(1) SMR CODE	(2) FEDERAL STOCK NUMBER	(3) DESCRIPTION REF NUMBER & MFR CODE	USABLE ON CODE	(4) UNIT OF MEAS	(5) QTY INC IN UNIT	(6) 30-DAY OS MAINT ALLOWANCE (a) 1-20	(b) 21-50	(c) 51-100	(7) 30-DAY GS MAINT ALLOWANCE (a) 1-20	(b) 21-50	(c) 51-100	(8) 1-YR ALW PER 100 EQUIP CNTGY	(9) DEPOT MAINT ALW PER 100 EQUIP	(10) ILLUSTRATION (a) FIG. NO.	(b) ITEM NO.
P20		TUBE ASSEMBLY: CLAM SHELL CONTROL 54367 (13841)		EA	1	*	*	*	*	*	*	*	*	11	6
P20		TUBE ASSEMBLY: CLAM SHELL CONTROL 54368 (13841)		EA	1	*	*	*	*	*	*	*	*	11	7
P O	3930-833-1877	UNION, TUBE: 3/4 IN. TUBE 4-12 (99103)		EA	10	*	*	*	*	*	*	*	*	11	8
P20		TUBE ASSEMBLY: EXTENSION CYLINDER TO HOSE 54377 (13841)		EA	1	*	*	*	*	*	*	*	*	11	9
P20		TUBE ASSEMBLY: EXTENSION CYLINDER TO HOSE 54378 (13841)		EA	1	*	*	*	*	*	*	*	*	11	10
P O		SWIVEL JOINT, TUBE 82-12-12 (99103)		EA	4	*	*	*	*	*	*	*	*	11	11
P20		TUBE ASSEMBLY: CLAMSHELL CONTROL 54366 (13841)		EA	2	*	*	*	*	*	*	*	*	11	12
P O		ELBOW, SWIVEL: 3/4 IN. TUBE 71-12 (99103)		EA	3	*	*	*	*	*	*	*	*	11	13
P O	4730-744-1235	ADAPTER, STRAIGHT, TUBE: W/O RING 62-12-10 (99103)		EA	3	*	*	*	*	*	*	*	*	11	14
P O		ELBOW, TUBE 66-12-10 (99103)		EA	5	*	*	*	*	*	*	*	*	11	15
M O		HOSE ASSEMBLY: SWIVEL JOINT TO TEE R2-16-16FH90RC16FHRC41 (99103) MANUFACTURE FROM:		EA	1									11	16
P O		HOSE, RUBBER, 35 3/4 IN. REQUIRED R2-16 (99103)				*	*	*	*	*	*				
P O		COUPLING, HOSE R2-16-16FH90RC (99103)				*	*	*	*	*	*				
P O		COUPLING, HOSE R2-16-16FHRC (99103)				*	*	*	*	*	*				
M O		HOSE ASSEMBLY: SWIVEL JOINT R2-16-16FH90RC16FHRC32 (99103) MANUFACTURE FROM:		EA	1									11	17
P O		HOSE, RUBBER, 26 3/4 IN. REQUIRED R2-16 (99103)				*	*	*	*	*	*				
P O		COUPLING, HOSE R2-16-16FH90RC (99103)				*	*	*	*	*	*				
P O		COUPLING, HOSE R2-16-16FHRC (99103)				*	*	*	*	*	*				
P20		TUBE ASSEMBLY: TEE TO HOSE 54369 (13841)		EA	1	*	*	*	*	*	*	*	*	11	18
M O		HOSE ASSEMBLY R2-12-12FHRC12FHRC18 (99103) MANUFACTURE FROM:		EA	2									11	19
P O		HOSE, RUBBER, 14 IN. REQUIRED R2-12 (99103)				*	*	*	*	*	*				
P O	4730-203-3551	COUPLING, HOSE R2-12-12FHRC (99103)				*	*	*	*	*	*				
P20		TUBE ASSEMBLY 54381 (13841)		EA	2	*	*	*	*	*	*	*	*	11	20
P O		TEE, TUBE, SWIVEL 73-12-12-16 (99103)		EA	2	*	*	*	*	*	*	*	*	11	21
P O	4730-755-7435	ADAPTER, STRAIGHT, TUBE: W/O RING, 3/4 IN. TUBE 62-12 (99103)		EA	2	*	*	*	*	*	*	*	*	11	22

(1) SMR CODE	(2) FEDERAL STOCK NUMBER	(3) DESCRIPTION REF NUMBER & MFR CODE	USABLE ON CODE	(4) UNIT OF MEAS	(5) QTY INC IN UNIT	(6) 30-DAY DS MAINT ALLOWANCE (a) 1-20	(b) 21-50	(c) 51-100	(7) 30-DAY GS MAINT ALLOWANCE (a) 1-20	(b) 21-50	(c) 51-100	(8) 1-YR ALW PER 100 EQUIP CNTGY	(9) DEPOT MAINT ALW PER 100 EQUIP	(10) ILLUSTRATION (a) FIG. NO.	(b) ITEM NO.
P O	4730-221-1265	ELBOW, TUBE: CHECK VALVE LINE 66-4-6 (99103)		EA	3	*	*	*	*	*	*	*	*	11	23
P O		PLUG, MACHINE: CHECK VALVE, W/O RING, 9/16-18 THD SIZE 64-6 (99103)		EA	4	*	*	*	*	*	*	*	*	11	24
P O		VALVE, CHECK: BOOM HOIST CYLINDER 1E15P12T12G30S52 (96259)		EA	2	*	*	*	*	*	*	*	*	11	25
P O	4730-903-4846	ADAPTER, STRAIGHT, TUBE: W/O RING, 1/4 IN. TUBE 62-4 (99103)		EA	3	*	*	*	*	*	*	*	*	11	26
P O		ELBOW, TUBE: W/NUT, WASHER AND O RING, 3/4 IN. TUBE 66-12-10 (99103)		EA	5	*	*	*	*	*	*	*	*	11	27
P20		TUBE ASSEMBLY: SWIVEL JOINT 54380 (13841)		EA	1	*	*	*	*	*	*	*	*	11	28
P20		TUBE ASSEMBLY: SWIVEL JOINT 54379 (13841)		EA	1	*	*	*	*	*	*	*	*	11	29
P20		TUBE ASSEMBLY: HOIST MOTOR TO JOINT 54372 (13841)		EA	1	*	*	*	*	*	*	*	*	11	30
P20		TUBE ASSEMBLY: CHECK VALVE TO JOINT 54371 (13841)		EA	1	*	*	*	*	*	*	*	*	11	31
P20		TUBE ASSEMBLY: CHECK VALVE TO HOIST MOTOR 54370 (13841)		EA	1	*	*	*	*	*	*	*	*	11	32
P20		TUBE ASSEMBLY: CHECK VALVE TO HOIST MOTOR 54374 (13841)		EA	1	*	*	*	*	*	*	*	*	11	33
P20		TUBE ASSEMBLY: HOIST MOTOR TO HOSE 54373 (13841)		EA	1	*	*	*	*	*	*	*	*	11	34
M O		HOSE ASSEMBLY: JOINT TO PUMP R2-8-10FHRC10FHRC24 (99103) MANUFACTURE FROM:		EA	1									11	35
P O		HOSE, RUBBER, 21 IN. REQUIRED R2-8 (99103)				*	*	*	*	*	*				
P O	4730-319-5878	COUPLING, HOSE R2-8-10FHRC (99103)				*	*	*	*	*	*				
P O		UNION, STRAIGHT: 5/8 IN. TUBE 4-10 (99103)		EA	1	*	*	*	*	*	*	*	*	11	36
P O	4730-469-6605	ELBOW, TUBE: W/NUT, WASHER AND O RING, 5/8 IN. TUBE 66-10-12 (99103)		EA	1	*	*	*	*	*	*	*	*	11	37
P O		SWIVEL JOINT, TUBE 84-10-10 (99103)		EA	1	*	*	*	*	*	*	*	*	11	38
P O	4730-221-1265	ELBOW, TUBE: W/NUT, WASHER AND O RING 66-4-6 (99103)		EA	3	*	*	*	*	*	*	*	*	11	39
P O		ADAPTER, STRAIGHT, TUBE: W/O RING, 1 IN. TUBE 62-16 (99103)		EA	8	*	*	*	*	*	*	*	*	11	40
P O		VALVE, CHECK: HOIST MOTOR 1E16P16T12G30S (96259)		EA	1	*	*	*	*	*	*	*	*	11	41
P O	4730-125-2643	CLAMP, HALF: SAE, NO. 2 23674-32 (99103)		EA	6	*	*	*	*	*	*	*	*	11	42
P O		PACKING, PREFORMED: 2 IN., SAE 22014-6 (99103)		EA	4	*	*	*	*	*	*	*	*	11	43
P20		TUBE ASSEMBLY: REVOLVING JOINT 54375 (13841)		EA	1	*	*	*	*	*	*	*	*	11	44

(1) SMR CODE	(2) FEDERAL STOCK NUMBER	(3) DESCRIPTION REF NUMBER & MFR CODE	USABLE ON CODE	(4) UNIT OF MEAS	(5) QTY INC IN UNIT	(6) 30-DAY DS MAINT ALLOWANCE (a) 1-20	(b) 21-50	(c) 51-100	(7) 30-DAY GS MAINT ALLOWANCE (a) 1-20	(b) 21-50	(c) 51-100	(8) 1-YR ALW PER 100 EQUIP CNTGY	(9) DEPOT MAINT ALW PER 100 EQUIP	(10) ILLUSTRATION (a) FIG. NO.	(b) ITEM NO.
M O		HOSE ASSEMBLY: PUMP R16-16SF90RC16SFRC33 (99103) MANUFACTURE FROM:		EA	1									12	1
P O		HOSE, RUBBER, 28 IN. REQUIRED R2-16 (99103)				*	*	*	*	*	*				
P O		COUPLING, HOSE R2-16-16SF90RC (99103)				*	*	*	*	*	*				
P O		COUPLING, HOSE R2-16-16SFRC (99103)				*	*	*	*	*	*				
P20		TUBE ASSEMBLY: TEST POINT TO HOSE 54359 (13841)		EA	1	*	*	*	*	*	*	*	*	12	2
P20		TUBE ASSEMBLY: CONTROL VALVE TO TEST POINT 54358 (13841)		EA	1	*	*	*	*	*	*	*	*	12	3
P O	4730-755-7606	CLAMP, HALF: SAE, NO. 1 23674-16 (99103)		EA	6	*	*	*	*	*	*	*	*	12	4
P O		PACKING, PREFORMED: TUBE 22013-24 (99103)		EA	6	*	*	*	*	*	*	*	*	12	5
P20		TEST POINT KIT 19021 (13841)		EA	3	*	*	*	*	*	*	*	*	12	6
P O		TEST POINT KIT: SPARE 19026 (13841)		EA	2	*	*	*	*	*	*	*	*	12	6
P20		TUBE ASSEMBLY: PUMP TO HOSE 54301 (13841)		EA	1	*	*	*	*	*	*	*	*	12	7
M O		HOSE ASSEMBLY: PUMP TO CONTROL VALVE LINE 4S20-20SF60RC20SFRC26 (99103) MANUFACTURE FROM:		EA	1									12	8
P O		HOSE, SPIRAL WRAP, 20 IN. REQUIRED 4S20 (99103)				*	*	*	*	*	*				
P O		COUPLING, SPLIT FLANGE 4S20-20SF60RC (99103)				*	*	*	*	*	*				
P O		COUPLING, SPLIT FLANGE 4S20-20SFRC (99103)				*	*	*	*	*	*				
P20		TUBE ASSEMBLY: HOSE TO CLAMP 54302 (13841)		EA	1	*	*	*	*	*	*	*	*	12	9
P20		TUBE ASSEMBLY: CLAMP TO TEST POINT 54303 (13841)		EA	1	*	*	*	*	*	*	*	*	12	10
P20		TUBE ASSEMBLY: TEST POINT TO CONTROL VALVE 54304 (13841)		EA	1	*	*	*	*	*	*	*	*	12	11
P O	4730-471-0106	CLAMP, HALF: 1 1/2 IN., SAE 23674-20 (99103)		EA	14	*	*	*	*	*	*	*	*	12	12
P O		PACKING, PREFORMED: 1 1/4 IN., SAE 22013-27 (99103)		EA	1	*	*	*	*	*	*	*	*	12	13
P20		TUBE ASSEMBLY: PUMP TO ELBOW 54362 (13841)		EA	1	*	*	*	*	*	*	*	*	12	14
P20		TUBE ASSEMBLY: PUMP TO TANK LINE 54365 (13841)		EA	1	*	*	*	*	*	*	*	*	12	15
P20		TUBE ASSEMBLY: PUMP TO TANK LINE 54363 (13841)		EA	1	*	*	*	*	*	*	*	*	12	16
P20		TUBE ASSEMBLY: PUMP TO TANK LINE 54364 (13841)		EA	1	*	*	*	*	*	*	*	*	12	17
P O		CLAMP, FLANGED: SAE, NO. 3 23604-48 (99103)		EA	1	*	*	*	*	*	*	*	*	12	18
P O		PACKING, PREFORMED: TUBE 22014-15 (99103)		EA	1	*	*	*	*	*	*	*	*	12	19

(1) SMR CODE	(2) FEDERAL STOCK NUMBER	(3) DESCRIPTION REF NUMBER & MFR CODE	USABLE ON CODE	(4) UNIT OF MEAS	(5) QTY INC IN UNIT	(6) 30-DAY DS MAINT ALLOWANCE (a) 1-20	(b) 21-50	(c) 51-100	(7) 30-DAY GS MAINT ALLOWANCE (a) 1-20	(b) 21-50	(c) 51-100	(8) 1-YR ALW PER 100 EQUIP CNTGY	(9) DEPOT MAINT ALW PER 100 EQUIP	(10) ILLUS-TRATION (a) FIG. NO.	(b) ITE NO
P20		TUBE ASSEMBLY: TEST POINT TO TEE 54361 (13841)		EA	1	*	*	*	*	*	*	*	*	12	2
P20		TUBE ASSEMBLY: RETURN LINE 54376 (13841)		EA	1	*	*	*	*	*	*	*	*	12	2
P O		PACKING, PREFORMED: TUBE 22013-24 (99103)		EA	1	*	*	*	*	*	*	*	*	12	2
P20		TUBE ASSEMBLY: CONTROL VALVE TO RETURN LINE 54319 (13841)		EA	1	*	*	*	*	*	*	*	*	12	2
P O	4730-471-0106	CLAMP, HALF: SAE, NO. 1 1/2 23674-20 (99103)		EA	14	*	*	*	*	*	*	*	*	12	2
P O		PACKING, PREFORMED: 1 1/4 IN. SAE 22013-27 (99103)		EA	7	*	*	*	*	*	*	*	*	12	2
P20		TUBE ASSEMBLY: CONTROL VALVE TO RETURN LINE 54318 (13841)		EA	1	*	*	*	*	*	*	*	*	12	2
P20		TUBE ASSEMBLY: CONTROL VALVE TO TEE 54360 (13841)		EA	1	*	*	*	*	*	*	*	*	12	2
P O		TEE, TUBE: 1 IN. TUBE 11-12 (99103)		EA	1	*	*	*	*	*	*	*	*	12	2
P20		TUBE ASSEMBLY: CONTROL VALVE TO HOSE 54333 (13841)		EA	2	*	*	*	*	*	*	*	*	12	2
P20		TUBE ASSEMBLY: CONTROL VALVE TO HOSE 54332 (13841)		EA	2	*	*	*	*	*	*	*	*	12	3
P20		TUBE ASSEMBLY: CONTROL VALVE TO AXLE LOCK LINE 54334 (13841)		EA	1	*	*	*	*	*	*	*	*	12	3
P20		TUBE ASSEMBLY: CONTROL VALVE TO AXLE LOCK LINE 54335 13841		EA	1	*	*	*	*	*	*	*	*	12	3
M O		HOSE ASSEMBLY OUTRIGGER, FRONT R2-8-10FH45RC10FHRC24 99103 MANUFACTURE FROM		EA	4									12	3
P O		HOSE, RUBBER, 20 1/4 IN. REQUIRED EA HOSE ASSEMBLY R2-8 99103				*	*	*	*	*	*				
P O		COUPLING, HOSE R2-8-10FH45RC 99103				*	*	*	*	*	*				
P O	4730-319-5878	COUPLING, HOSE R2-8-10FHRC 99103				*	*	*	*	*	*				
P20		TUBE ASSEMBLY: CONTROL VALVE TO HOSE 54346 (13841)		EA	1	*	*	*	*	*	*	*	*	12	3
P20		TUBE ASSEMBLY: CONTROL VALVE TO HOSE 54347 (13841)		EA	1	*	*	*	*	*	*	*	*	12	3
P20		TUBE ASSEMBLY: CONTROL VALVE TO HOSE 54349 (13841)		EA	1	*	*	*	*	*	*	*	*	12	3
P20		TUBE ASSEMBLY: CONTROL VALVE TO HOSE 54348 (13841)		EA	1	*	*	*	*	*	*	*	*	12	3
P20		TUBE ASSEMBLY: CONTROL VALVE TO TUBE 54354 (13841)		EA	1	*	*	*	*	*	*	*	*	12	3
P20		TUBE ASSEMBLY: CONTROL VALVE TO TUBE 54357 (13841)		EA	1	*	*	*	*	*	*	*	*	12	3
P20		TUBE ASSEMBLY: CONTROL VALVE TO TUBE 54356 (13841)		EA	1	*	*	*	*	*	*	*	*	12	4
P20		TUBE ASSEMBLY: CONTROL VALVE TO TUBE 54355 (13841)		EA	1	*	*	*	*	*	*	*	*	12	4

(1) SMR CODE	(2) FEDERAL STOCK NUMBER	(3) DESCRIPTION REF NUMBER & MFR CODE	USABLE ON CODE	(4) UNIT OF MEAS	(5) QTY INC IN UNIT	(6) 30-DAY DS MAINT ALLOWANCE (a) 1-20	(b) 21-50	(c) 51-100	(7) 30-DAY GS MAINT ALLOWANCE (a) 1-20	(b) 21-50	(c) 51-100	(8) 1-YR ALW PER 100 EQUIP CNTGY	(9) DEPOT MAINT ALW PER 100 EQUIP	(10) ILLUS-TRATION (a) FIG. NO.	(b) ITEM NO.
P20		TUBE ASSEMBLY: CONTROL VALVE TO HOSE 54350 (13841)		EA	1	*	*	*	*	*	*	*	*	12	42
P20		TUBE ASSEMBLY: CONTROL VALVE TO HOSE 54351 (13841)		EA	1	*	*	*	*	*	*	*	*	12	43
P20		TUBE ASSEMBLY: CONTROL VALVE TO HOSE 54352 (13841)		EA	1	*	*	*	*	*	*	*	*	12	44
P20		TUBE ASSEMBLY: CONTROL VALVE TO HOSE 54353 (13841)		EA	1	*	*	*	*	*	*	*	*	12	45
M O		HOSE ASSEMBLY: OUTRIGGER, REAR R2-8-10FH90RC10FHRC24 (99103) MANUFACTURE FROM:		EA	4									12	46
P O		HOSE, RUBBER, 20 1/2 IN. REQUIRED FOR EA HOSE ASSEMBLY R2-8 (99103)				*	*	*	*	*	*				
P O		COUPLING, HOSE R2-8-10FH90RC (99103)				*	*	*	*	*	*				
P O	4730-319-5878	COUPLING, HOSE R2-8-10FHRC (99103)				*	*	*	*	*	*				
P O		UNION, TUBE, STRAIGHT: 3/4 IN. TUBE 4-12-10 (99103)		EA	8	*	*	*	*	*	*	*	*	12	47
P O	4730-744-1234	ELBOW, TUBE, SWIVEL: 5/8 IN. TUBE 71-10 (99103)		EA	4	*	*	*	*	*	*	*	*	12	48
P O	4730-744-1230	ADAPTER, STRAIGHT, TUBE: W/O RING, 5/8 IN. TUBE 62-10 (99103)		EA	20	*	*	*	*	*	*	*	*	12	49
P O	4730-946-7823	ELBOW, TUBE: W/NUT, WASHER AND O RING, 3/4 IN. TUBE 66-12 (99103)		EA	2	*	*	*	*	*	*	*	*	12	50
P O	4730-755-7515	ADAPTER, STRAIGHT, TUBE: W/O RING, 3/8 IN. TUBE 62-6-10 (99103)		EA	2	*	*	*	*	*	*	*	*	12	51
M O		HOSE ASSEMBLY: SUPERSTRUCTURE R2-12-12FHRC12FH (99103) MANUFACTURE FROM:		EA	4									12	52
P O		HOSE, MULTIPLE BRAID, 5 FT 1 IN. REQUIRED FOR EA HOSE ASSEMBLY R2-12-60 (99103)				*	*	*	*	*	*				
P O	4730-203-3551	COUPLING, HOSE R2-12-12FHRC (99103)				*	*	*	*	*	*				
M O		HOSE ASSEMBLY: RETURN LINE R2-12-12FHRC12FHRC22 (99103)		EA	1									12	53
P O		HOSE, RUBBER, 18 IN. REQUIRED R2-12 (99103)				*	*	*	*	*	*				
P O	4730-203-3551	COUPLING, HOSE R2-12-12FHRC (99103)				*	*	*	*	*	*				
P20		TUBE ASSEMBLY: REVOLVING JOINT TO HOSE 54323 (13841)		EA	1	*	*	*	*	*	*	*	*	12	54
P20		TUBE ASSEMBLY: REVOLVING JOINT TO HOSE 54325 (13841)		EA	1	*	*	*	*	*	*	*	*	12	55
P20		TUBE ASSEMBLY: SWING MOTOR TO HOSE 54330 (13841)		EA	1	*	*	*	*	*	*	*	*	12	56
P20		TUBE ASSEMBLY: SWING MOTOR TO HOSE 54331 (13841)		EA	1	*	*	*	*	*	*	*	*	12	57
P20		TUBE ASSEMBLY: TEE TO HOSE 54329 (13841)		EA	1	*	*	*	*	*	*	*	*	12	58
P20		TUBE ASSEMBLY: SWING MOTOR TO TEE 54328 (13841)		EA	1	*	*	*	*	*	*	*	*	12	59

(1) SMR CODE	(2) FEDERAL STOCK NUMBER	(3) DESCRIPTION REF NUMBER & MFR CODE	USABLE ON CODE	(4) UNIT OF MEAS	(5) QTY INC IN UNIT	(6) 30-DAY DS MAINT ALLOWANCE (a) 1-20	(b) 21-50	(c) 51-100	(7) 30-DAY GS MAINT ALLOWANCE (a) 1-20	(b) 21-50	(c) 51-100	(8) 1-YR ALW PER 100 EQUIP CNTGY	(9) DEPOT MAINT ALW PER 100 EQUIP	(10) ILLUSTRATION (a) FIG. NO.	(b) ITEM NO.
P O	3930-833-1877	UNION, TUBE: 3/4 IN. TUBE 4-12 (99103)		EA	10	*	*	*	*	*	*	*	*	12	60
P O		COUPLING ASSEMBLY, QUICK DISCONNECT 17153 (13841)		EA	5	*	*	*	*	*	*	*	*	12	61
P O		ELBOW, TUBE 66-12-10 (99103)		EA	5	*	*	*	*	*	*	*	*	12	62
P O	4730-471-0105	FITTING, TUBE 30645 (99103)		EA	2	*	*	*	*	*	*	*	*	12	63
P O		ADAPTER, STRAIGHT, TUBE: W/O RING 62-6-8 (99103)		EA	1	*	*	*	*	*	*	*	*	12	64
P O		TEE, TUBE 11-6-12-10 (99103)		EA	1	*	*	*	*	*	*	*	*	12	65
P20		TUBE ASSEMBLY: REVOLVING JOINT TO HOSE 54322 (13841)		EA	1	*	*	*	*	*	*	*	*	12	66
P20		TUBE ASSEMBLY: REVOLVING JOINT TO HOSE 54321 (13841)		EA	1	*	*	*	*	*	*	*	*	12	67
P20		TUBE ASSEMBLY: REVOLVING JOINT TO HOSE 54327 (13841)		EA	1	*	*	*	*	*	*	*	*	12	68
P20		TUBE ASSEMBLY: REVOLVING JOINT TO HOSE 54324 (13841)		EA	1	*	*	*	*	*	*	*	*	12	69
P20		TUBE ASSEMBLY: REVOLVING JOINT TO HOSE 54320 (13841)		EA	1	*	*	*	*	*	*	*	*	12	70
P20		TUBE ASSEMBLY: REVOLVING JOINT TO HOSE 54326 (13841)		EA	1	*	*	*	*	*	*	*	*	12	71
M O		HOSE ASSEMBLY: SUPERSTRUCTURE LINES R2-16-16FHRC16FHRC25 (99103) MANUFACTURE FROM:		EA	6									12	72
P O		HOSE, RUBBER, 20 1/8 IN. REQUIRED FOR EA HOSE ASSEMBLY R2-16 (99103)				*	*	*	*	*	*				
P O		COUPLING, HOSE R2-16-16FHRC (99103)				*	*	*	*	*	*				
P O		COUPLING ASSEMBLY 17154 (13841)				*	*	*	*	*	*			12	73
P20		TUBE ASSEMBLY: CONTROL VALVE TO HOSE 54312 (13841)		EA	1	*	*	*	*	*	*	*	*	12	74
P20		TUBE ASSEMBLY: CONTROL VALVE TO HOSE 54311 (13841)		EA	1	*	*	*	*	*	*	*	*	12	75
P20		TUBE ASSEMBLY: CONTROL VALVE TO HOSE 54314 (13841)		EA	1	*	*	*	*	*	*	*	*	12	76
P20		TUBE ASSEMBLY: CONTROL VALVE TO HOSE 54313 (13841)		EA	1	*	*	*	*	*	*	*	*	12	77
P20		TUBE ASSEMBLY: CONTROL VALVE TO HOSE 54316 (13841)		EA	1	*	*	*	*	*	*	*	*	12	78
P20		TUBE ASSEMBLY: CONTROL VALVE TO HOSE 54315 (13841)		EA	1	*	*	*	*	*	*	*	*	12	79
P O		ELBOW, TUBE, SWIVEL: 1 IN. TUBE 71-16 (99103)		EA	2	*	*	*	*	*	*	*	*	12	80
P O		ADAPTER, STRAIGHT, TUBE: 1 IN. TUBE 62-16 (99103)		EA	8	*	*	*	*	*	*	*	*	12	81

(1) SMR CODE	(2) FEDERAL STOCK NUMBER	(3) DESCRIPTION REF NUMBER & MFR CODE	USABLE ON CODE	(4) UNIT OF MEAS	(5) QTY INC IN UNIT	(6) 30-DAY DS MAINT ALLOWANCE (a) 1-20	(b) 21-50	(c) 51-100	(7) 30-DAY GS MAINT ALLOWANCE (a) 1-20	(b) 21-50	(c) 51-100	(8) 1-YR ALW PER 100 EQUIP CNTGY	(9) DEPOT MAINT ALW PER 100 EQUIP	(10) ILLUSTRATION (a) FIG. NO.	(b) ITEM NO.
P O		ELBOW, TUBE: W/NUT, WASHER AND O RING, 1 1/4 IN. TUBE 66-20-16 (99103)		EA	2	*	*	*	*	*	*	*	*	12	82
P O		PLUG, MACHINE: W/O RING, 1 5/8-12 THD SIZE 64-20 (99103)		EA	1	*	*	*	*	*	*	*	*	12	83
P20		TUBE ASSEMBLY: CONTROL VALVE TO BLADE CYLINDER 54306 (13841)		EA	1	*	*	*	*	*	*	*	*	12	84
P20		TUBE ASSEMBLY: CONTROL VALVE TO BLADE CYLINDER 54310 (13841)		EA	1	*	*	*	*	*	*	*	*	12	85
P20		TUBE ASSEMBLY: CONTROL VALVE TO AXLE LOCK TEE 54336 (13841)		EA	1	*	*	*	*	*	*	*	*	12	86
P20		TUBE ASSEMBLY: CONTROL VALVE TO AXLE LOCK TEE 54337 (13841)		EA	1	*	*	*	*	*	*	*	*	12	87
P O		UNION, STRAIGHT: 3/8 IN. TUBE 4-6 (99103)		EA	2	*	*	*	*	*	*	*	*	12	88
P20		TUBE ASSEMBLY: TEE TO CHECK VALVE 54339 (13841)		EA	1	*	*	*	*	*	*	*	*	12	89
P20		TUBE ASSEMBLY: TEE TO CHECK VALVE 54340 (13841)		EA	1	*	*	*	*	*	*	*	*	12	90
P20		TUBE ASSEMBLY: CHECK VALVE TO AXLE LOCK 54342 (13841)		EA	1	*	*	*	*	*	*	*	*	12	91
P20		TUBE ASSEMBLY: CHECK VALVE TO AXLE LOCK 54344 (13841)		EA	1	*	*	*	*	*	*	*	*	12	92
P20		TUBE, ASSEMBLY: TEE TO CHECK VALVE 54338 (13841)		EA	1	*	*	*	*	*	*	*	*	12	93
P20		TUBE ASSEMBLY: TEE TO CHECK VALVE 54341 (13841)		EA	1	*	*	*	*	*	*	*	*	12	94
P O	4730-755-7471	FITTING, TUBE: 3/8 IN. TUBE 11-6 (99103)		EA	2	*	*	*	*	*	*	*	*	12	95
P20		TUBE ASSEMBLY: CHECK VALVE TO AXLE LOCK 54343 (13841)		EA	1	*	*	*	*	*	*	*	*	12	96
P20		TUBE ASSEMBLY: CHECK VALVE TO AXLE LOCK 54345 (13841)		EA	1	*	*	*	*	*	*	*	*	12	97
P O	4730-702-3467	ADAPTER, STRAIGHT, TUBE: W/O RING, 3/8 IN. TUBE 62-6 (99103)		EA	8	*	*	*	*	*	*	*	*	12	98
P O		VALVE ASSEMBLY: CHECK 4KK33N6TS (96259)		EA	2	*	*	*	*	*	*	*	*	12	99
		GROUP 05 - HYDRAULIC CYLINDERS													
X20	3110-185-6389	NUT, PLAIN, ROUND: CYLINDER SHAFT N08 (38443)		EA	4									13	1
X20	3110-186-0967	WASHER, KEY: CYLINDER SHAFT W08 (38443)		EA	4									13	2
X20		SPACER, SLEEVE: CYLINDER 20259 (13841)		EA	2									13	3
X20	5340-023-5584	SPACER, SLEEVE: CYLINDER 20258 (13841)		EA	2									13	4

(1) SMR CODE	(2) FEDERAL STOCK NUMBER	(3) DESCRIPTION REF NUMBER & MFR CODE	USABLE ON CODE	(4) UNIT OF MEAS	(5) QTY INC IN UNIT	(6) 30-DAY DS MAINT ALLOWANCE (a) 1-20	(b) 21-50	(c) 51-100	(7) 30-DAY GS MAINT ALLOWANCE (a) 1-20	(b) 21-50	(c) 51-100	(8) 1-YR ALW PER 100 EQUIP CNTGY	(9) DEPOT MAINT ALW PER 100 EQUIP	(10) ILLUSTRATION (a) FIG. NO.	(b) ITEM NO.
P O R		CYLINDER, HYDRAULIC: BOOM HOIST H1615C (30014)		EA	2	*	*	*	*	*	*	*	*	13	5
X2F		SCREW, BODY: 7/8-14 X 3 IN. LG 7-8-14X3 (30014)		EA	8									13	6
X2F	5310-757-3514	NUT, ROD: 1 1/2-12 THD SIZE 1-1-2X12 (30014)		EA	2									13	7
X2F		PISTON H1615-4A (30014)		EA	2									13	8
P F		PACKING, PREFORMED: PISTON H1615-42A (30014)		EA	4	*	*	*	*	*	*	*	*	13	9
X2F		SLEEVE, PISTON H1615-5A (30014)		EA	2									13	10
P F	5330-757-3422	PACKING, PREFORMED: RETAINER 222 (30014)		EA	2	*	*	*	*	*	*	*	*	13	11
X2F		RETAINER, PACKING H1615-6A (30014)		EA	2									13	12
P F	5330-731-7749	PACKING, PREFORMED: HEAD 256 (30014)		EA	2	*	*	*	*	*	*	*	*	13	13
P F	3120-880-7747	BEARING, SELF-ALIGNING: ROD END B28L (51588)		EA	2	*	*	*	*	*	*	*	*	13	14
X1		PISTON ROD H1615-3B (30014)		EA	2									13	15
P F		SETSCREW: PACKING, RETAINER: 3/8-24 X 1 IN. LG 3-8-24X1 (30014)		EA	8	*	*	*	*	*	*	*	*	13	16
P F	3810-744-1330	WIPER, ROD 16-13 (30014)		EA	2	*	*	*	*	*	*	*	*	13	17
X2F		STUFFING BOX: TUBE H1615-7A (30014)		EA	2									13	18
P F		PACKING, STUFFING BOX H1615-82A (30014)		EA	2	*	*	*	*	*	*	*	*	13	19
X1		BUSHING H1615-8A (30014)		EA	2									13	20
X2F		HEAD, CYLINDER H1615-2C (30014)		EA	2									13	21
X1		BODY, CYLINDER H1615-1B (30014)		EA	2									13	22
X20		KEY, MACHINE: CYLINDER SHAFT, 3/8 IN. SQUARE, 2 IN. LG 12063 (13841)		EA	1									13	23
P2F	3040-756-0891	SHAFT, SHOULDERED: LOWER 20246 (13841)		EA	1	*	*	*	*	*	*	*	*	13	24
P2F	5340-720-0759	SHAFT, SHOULDERED: UPPER 20257 (13841)		EA	1	*	*	*	*	*	*	*	*	13	25
P O		PIN, COTTER: CYLINDER MTG, 3/16 IN. DIA, 2 IN. LG 2428 (13841)		EA	4	*	*	*	*	*	*	*	*	14	
X20		PIN, STRAIGHT, HEADLESS: CYLINDER MTG, 1 1/4 IN. DIA, 9 1/16 IN. LG 20251 (13841)		EA	1									14	
X20		PIN, STRAIGHT, HEADLESS: CYLINDER MTG, 1 1/4 IN. DIA, 5 IN. LG 19763 (13841)		EA	1									14	
P O R		CYLINDER, HYDRAULIC: BOOM EXTENSION H1614C (30014)		EA	1	*	*	*	*	*	*	*	*	14	
P F		LOCKWIRE: CYLINDER SCREW		EA	V	*	*	*	*	*	*	*	*	14	

(1) SMR CODE	(2) FEDERAL STOCK NUMBER	(3) DESCRIPTION REF NUMBER & MFR CODE	USABLE ON CODE	(4) UNIT OF MEAS	(5) QTY INC IN UNIT	(6) 30-DAY DS MAINT ALLOWANCE (a) 1-20	(b) 21-50	(c) 51-100	(7) 30-DAY GS MAINT ALLOWANCE (a) 1-20	(b) 21-50	(c) 51-100	(8) 1-YR ALW PER 100 EQUIP CNTGY	(9) DEPOT MAINT ALW PER 100 EQUIP	(10) ILLUSTRATION (a) FIG. NO.	(b) ITEM NO.
P F		SCREW, CAP, HEXAGON HEAD: HEAD MTG, 1/2-20 X 1 1/2 IN. LG 1-2-20X1-1-2 (30014)		EA	4	*	*	*	*	*	*	*	*	14	5
X2F		NUT, ROD: 1-14 THD SIZE 1-14 (30014)		EA	1									14	6
X2F		PISTON, HYDRAULIC H1614-4A (30014)		EA	1									14	7
P F	5330-757-3422	PACKING, PREFORMED: CYLINDER 222 (30014)		EA	1	*	*	*	*	*	*	*	*	14	8
X2F		RETAINER, PACKING H1614-6A (30014)		EA	1									14	9
P F	5330-757-3428	PACKING, PREFORMED: PISTON H1614-42A (30014)		EA	2	*	*	*	*	*	*	*	*	14	10
X2F		SLEEVE, PISTON H1614-5A (30014)		EA	1									14	11
P F	5330-731-7861	PACKING, PREFORMED: CYLINDER 232 (30014)		EA	1	*	*	*	*	*	*	*	*	14	12
P F	3810-744-1332	WIPER, ROD 16-21 (30014)		EA	1	*	*	*	*	*	*	*	*	14	13
X2F		RETAINER, PACKING H1614-7A (30014)		EA	1									14	14
P F		PACKING, PREFORMED: ROD H1614-82A (30014)		EA	1	*	*	*	*	*	*	*	*	14	15
P F		BUSHING, SLEEVE H1614-8A (30014)		EA	1	*	*	*	*	*	*	*	*	14	16
X2F		HEAD, CYLINDER H1614-2B (30014)		EA	1									14	17
X2F		ROD, PISTON H1614-3B (30014)		EA	1									14	18
P F	3120-913-2456	BEARING, SELF-ALIGNING B20L (51588)		EA	1									14	19
P O	4710-731-1281	TUBE ASSEMBLY: RETURN H1038-25B (30014)		EA	1	*	*	*	*	*	*	*	*	14	20
P O		CONNECTOR, MALE: TUBE 5315X6 (79470)		EA	1	*	*	*	*	*	*	*	*	14	21
P O	4730-846-0150	ELBOW, MALE: TUBE 5405X6X6 (79470)		EA	1	*	*	*	*	*	*	*	*	14	22
X1		BODY CYLINDER H1614-1B (30014)		EA	1									14	23
P O		VALVE, CHECK: PILOT 1317-4 (30014)		EA	1	*	*	*	*	*	*	*	*	14	
P O		PIN, COTTER: OUTRIGGER CYLINDER PIN, 1/4 IN. DIA, 2 1/2 IN. LG 8604 (13841)		EA	8	*	*	*	*	*	*	*	*	15	1
X20		PIN, STRAIGHT, HEADLESS: OUTRIGGER CYLINDER, 1.750 IN. DIA, 5 13/16 IN. LG 19336 (13841)		EA	4									15	2
P O	5310-012-3221	NUT, PLAIN, HEXAGON: OUTRIGGER CYLINDER PIN, 3/8-16 THD SIZE 1852 (13841)		EA	4	*	*	*	*	*	*	*	*	15	3
P O	5310-018-7123	WASHER, LOCK: OUTRIGGER CYLINDER PIN, 3/8 IN. 1887 (13841)		EA	4	*	*	*	*	*	*	*	*	15	4
P O		SCREW, CAP, HEXAGON HEAD: OUTRIGGER CYLINDER PIN, 3/8-16 X 3 1/2 IN. LG 1315 (13841)		EA	4	*	*	*	*	*	*	*	*	15	5

(1) SMR CODE	(2) FEDERAL STOCK NUMBER	(3) DESCRIPTION REF NUMBER & MFR CODE	USABLE ON CODE	(4) UNIT OF MEAS	(5) QTY INC IN UNIT	(6) 30-DAY DS MAINT ALLOWANCE (a) 1-20	(b) 21-50	(c) 51-100	(7) 30-DAY GS MAINT ALLOWANCE (a) 1-20	(b) 21-50	(c) 51-100	(8) 1-YR ALW PER 100 EQUIP CNTGY	(9) DEPOT MAINT ALW PER 100 EQUIP	(10) ILLUSTRATION (a) FIG. NO.	(b) ITEM NO.
P O	4730-050-4208	FITTING, LUBRICATION: OUTRIGGER CYLINDER PIN MS15003-1 (96906)		EA	4	*	*	*	*	*	*	*	*	15	6
X20		PIN, STRAIGHT, HEADLESS: OUTRIGGER CYLINDER, 1 750 IN. DIA, 8 7/8 IN. LG 18825 (13841)		EA	4									15	7
P O R		CYLINDER, HYDRAULIC: OUUTRIGGER H1616C (30014)		EA	4	*	*	*	*	*	*	*	*	15	
P O		TUBE ASSEMBLY, RETURN H1616-25B (30014)		EA	4	*	*	*	*	*	*	*	*	15	8
P O		CONNECTOR, MALE: TUBE 5315X8 (79470)		EA	4	*	*	*	*	*	*	*	*	15	9
P O	4730-903-7175	ELBOW, PIPE TO TUBE: CYLINDER LINE 5405X8X8 (79470)		EA	4	*	*	*	*	*	*	*	*	15	10
X2F		CLOSURE REDUCER H1040-19A (30014)		EA	4									15	11
P F	5330-728-8295	PACKING, PREFORMED: PISTON CLOSURE 122 (30014)		EA	4	*	*	*	*	*	*	*	*	15	12
P F	5330-728-8204	PACKING, PREFORMED: PISTON 210 (30014)		EA	4	*	*	*	*	*	*	*	*	15	13
X2F		PISTON, PILOT H1040-13A (30014)		EA	4									15	14
X2F		PLUG, SPRING CLOSURE H1041-19A (30014)		EA	4									15	15
P F	5330-728-8295	PACKING, PREFORMED: SPRING CLOSURE 122 (30014)		EA	4	*	*	*	*	*	*	*	*	15	16
X2F		SPRING, CHECK H566-29A (30014)		EA	4									15	17
X2F		BALL CHECK: RELEASE, 3/4 IN. DIA 20429 (13841)		EA	4									15	18
P F		PLUG, RELEASE: 3/8 IN. NPTF 3-8 (30014)		EA	4	*	*	*	*	*	*	*	*	15	19
P F		SETSCREW, RELEASE: 3/8-24 X 1 IN. LG 3-8X24X1 (30014)		EA	4	*	*	*	*	*	*	*	*	15	20
X2F		BALL, RELEASE: 1/4 IN. DIA 1-4 (30014)		EA	4									15	21
M F		LOCKWIRE MANUFACTURE FROM:		EA	8									15	22
P F	9525-529-9196	WIRE, STEEL: 0.051 IN. DIA, 4 FT REQUIRED				*	*	*	*	*	*				
X2F		SCREW, CAP, HEXAGON HEAD: HEAD MTG, 5/8-18 X 2 1/4 IN. LG 5-8-18X2-1-4 (30014)		EA	16									15	23
X2F		NUT, ROD 1-1-2-12 (30014)		EA	4									15	24
X2F		PISTON H1616-4A (30014)		EA	4									15	25
P F	5330-757-3424	PACKING, PREFORMED: PISTON H1616-42A (30014)		EA	8	*	*	*	*	*	*	*	*	15	26
X2F		SLEEVE, PISTON H1616-5A (30014)		EA	4									15	27
P F	5330-757-3422	PACKING, PREFORMED: ROD 222 (30014)		EA	4	*	*	*	*	*	*	*	*	15	28
X2F		RETAINER, PACKING H1616-6A (30014)		EA	4									15	29

(1) SMR CODE	(2) FEDERAL STOCK NUMBER	(3) DESCRIPTION REF NUMBER & MFR CODE	USABLE ON CODE	(4) UNIT OF MEAS	(5) QTY INC IN UNIT	(6) 30-DAY DS MAINT ALLOWANCE (a) 1-20	(b) 21-50	(c) 51-100	(7) 30-DAY GS MAINT ALLOWANCE (a) 1-20	(b) 21-50	(c) 51-100	(8) 1-YR ALW PER 100 EQUIP CNTGY	(9) DEPOT MAINT ALW PER 100 EQUIP	(10) ILLUSTRATION (a) FIG. NO.	(b) ITEM NO.
P F		PACKING, PREFORMED: HEAD 248 (30014)		EA	4	*	*	*	*	*	*	*	*	15	30
P F	3120-880-7747	BEARING, SELF-ALIGNING: ROD 828L (51588)		EA	4	*	*	*	*	*	*	*	*	15	31
X2F		ROD, PISTON H1616-3B (30014)		EA	4									15	32
P F		SCREW, CAP, HEXAGON HEAD: RETAINER MTG, 5/16-18 X 1 IN. LG 5-16-18X1 (30014)		EA	16	*	*	*	*	*	*	*	*	15	33
P F	3810-744-1328	WIPER, ROD 16-25 (30014)		EA	4	*	*	*	*	*	*	*	*	15	34
X2F		STUFFING TUBE H1616-7A (30014)		EA	4									15	35
P F		PACKING, PREFORMED: ROD H1616-82A (30014)		EA	4	*	*	*	*	*	*	*	*	15	36
X1		BUSHING H1616-8A (30014)		EA	4									15	37
X2F		HEAD, CYLINDER H1616-2B (30014)		EA	4									15	38
X2F		BODY, CYLINDER H1616-1B (30014)		EA	4									15	39
P O	5310-012-4589	NUT, PLAIN, HEXAGON: CYLINDER MTG, 5/8-11 THD SIZE 1855 (13841)		EA	8	*	*	*	*	*	*	*	*	16	1
P O	5310-820-6653	WASHER, LOCK: CYLINDER MTG, 5/8 IN. 1890 (13841)		EA	8	*	*	*	*	*	*	*	*	16	2
X2D		SCREW, CAP, HEXAGON HEAD: CYLINDER MTG, 5/8-11 X 2 1/4 IN. LG 1333 (13841)		EA	8									16	3
P O R		CYLINDER ASSEMBLY, HYDRAULIC: STABILIZER H1877 (30014)		EA	2	*	*	*	*	*	*	*	*	16	4
X1		HEAD H10802A (30014)		EA	2									16	5
P F	3810-744-1328	WIPER, ROD 16-25 (30014)		EA	2	*	*	*	*	*	*	*	*	16	6
P F		PACKING, PREFORMED: HEAD 248 (30014)		EA	2	*	*	*	*	*	*	*	*	16	7
P F	5330-719-9572	PACKING, PREFORMED: CYLINDER HEAD 2-1-2X3AP (30014)		EA	2	*	*	*	*	*	*	*	*	16	8
X2F		ROD, PISTON H10803A (30014)		EA	2									16	9
X2F		PISTON H10804A (30014)		EA	2									16	10
P F	5330-719-9554	PACKING, PREFORMED: PISTON 4-1-2X5AP (30014)		EA	4	*	*	*	*	*	*	*	*	16	11
X1		BODY H1877-1A (30014)		EA	2									16	12

(1) SMR CODE	(2) FEDERAL STOCK NUMBER	(3) DESCRIPTION REF NUMBER & MFR CODE	USABLE ON CODE	(4) UNIT OF MEAS	(5) QTY INC IN UNIT	(6) 30-DAY DS MAINT ALLOWANCE (a) 1-20	(b) 21-50	(c) 51-100	(7) 30-DAY GS MAINT ALLOWANCE (a) 1-20	(b) 21-50	(c) 51-100	(8) 1-YR ALW PER 100 EQUIP CNTGY	(9) DEPOT MAINT ALW PER 100 EQUIP	(10) ILLUSTRATION (a) FIG. NO.	(b) ITEM NO.
		GROUP 06 - HYDRAULIC PUMP, TANK AND FILTER													
X20		CLAMP, TUBE: HYDRAULIC LINE 36143-2-1-2 (99103)		EA	4									17	1
P 0	5310-045-1005	NUT, SELF-LOCKING: TUBE CLAMP, 5/16-18 THD SIZE		EA	4	*	*	*	*	*	*	*	*	17	2
P 0	5306-515-9854	BOLT, SQUARE NECK: TUBE CLAMP, 5/16-18 X 2 IN. LG		EA	4	*	*	*	*	*	*	*	*	17	3
X20		RETAINER, SEAL A302059-2-1-2 (99103)		EA	4									17	4
X20		SEAL, CLAMP 302060-2-1-2 (99103)		EA	4									17	5
X20		UNION, PIPE: HYDRAULIC LINE, 2 1/2 IN. 11156 (13841)		EA	1									17	6
X20		NIPPLE, PIPE: HYDRAULIC LINE, 2 1/2 IN. CLOSE 11155 (13841)		EA	2									17	7
X20		ELBOW, PIPE: HYDRAULIC LINE, 2 1/2 IN. X 90 DEG 3687 (13841)		EA	3									17	8
X20		NIPPLE, PIPE: HYDRAULIC LINE, 2 1/2 X 15 IN. LG 22456 (13841)		EA	1									17	9
P 0		ELBOW PIPE: HYDRAULIC LINE, 1 1/2 IN. X 90 DEG 11741 (13841)		EA	1	*	*	*	*	*	*	*	*	17	10
P 0	5305-782-9494	SCREW, CAP, HEXAGON HEAD: FLANGE MTG, 1/2-13 X 1 3/4 IN. LG 1813 (13841)		EA	4	*	*	*	*	*	*	*	*	17	11
P 0	5310-042-6895	WASHER, LOCK: FLANGE MTG, 1/2 IN. 1889 (13841)		EA	4	*	*	*	*	*	*	*	*	17	12
X20		FLANGE, PIPE: HYDRAULIC FILTER LINE 26356-32-32 (99103)		EA	1									17	13
X20		NIPPLE, PIPE: FILTER LINE, 2 X 3 IN. LG 11279 (13841)		EA	1									17	14
P 0	4730-755-7682	ELBOW, PIPE: FILTER LINE, 2 IN. X 90 DEG 3694 (13841)		EA	2	*	*	*	*	*	*	*	*	17	15
X20		NIPPLE, PIPE: FILTER LINE, 2 X 9 IN. LG 11280 (13841)		EA	1									17	16
P 0	5310-042-6895	NUT, PLAIN, HEXAGON: RESERVOIR MTG, 1/2-13 THD SIZE 1854 (13841)		EA	4	*	*	*	*	*	*	*	*	17	17
P 0	5310-042-6895	WASHER, LOCK: RESERVOIR MTG, 1/2 IN. 1889 (13841)		EA	4	*	*	*	*	*	*	*	*	17	18
P 0	5305-527-4193	SCREW, CAP, HEXAGON HEAD: RESERVOIR MTG, 1/2-13 X 1 1/4 IN. LG 1811 (13841)		EA	4	*	*	*	*	*	*	*	*	17	19
P20		RESERVOIR ASSEMBLY: HYDRAULIC 18914 (13841)		EA	1	*	*	*	*	*	*	*	*	17	20
P 0	5340-023-7548	PLUG, MAGNETIC: TANK DRAIN PM110 (36540)		EA	1	*	*	*	*	*	*	*	*	17	21
P 0		GAGE, SIGHT: HYDRAULIC OIL 8575 (98298)		EA	1	*	*	*	*	*	*	*	*	17	22

(2) FEDERAL STOCK NUMBER	(3) DESCRIPTION REF NUMBER & MFR CODE	USABLE ON CODE	(4) UNIT OF MEAS	(5) QTY INC IN UNIT	(6) 30-DAY DS MAINT ALLOWANCE (a) 1-20	(b) 21-50	(c) 51-100	(7) 30-DAY GS MAINT ALLOWANCE (a) 1-20	(b) 21-50	(c) 51-100	(8) 1-YR ALW PER 100 EQUIP CNTGY	(9) DEPOT MAINT ALW PER 100 EQUIP	(10) ILLUSTRATION (a) FIG. NO.	(b) ITEM NO.
	CAP, STRAINER 3920 (10203)		EA	1	*	*	*	*	*	*	*	*	17	23
	STRAINER ASSEMBLY 4335 (10203)		EA	1	*	*	*	*	*	*	*	*	17	24
3930-951-3781	BREATHER, HYDRAULIC TANK 14132 (00736)		EA	1	*	*	*	*	*	*	*	*	17	25
	VALVE, EXHAUST EV250 (92029)		EA	1	*	*	*	*	*	*	*	*	17	26
	ELBOW, STREET: BREATHER 1985 (13841)		EA	1	*	*	*	*	*	*	*	*	17	27
	NIPPLE, PIPE: BREATHER, 1/4 IN. NPT 11191 (13841)		EA	1	*	*	*	*	*	*	*	*	17	28
	SCREW, CAP, HEXAGON HEAD: COVER PLATE MTG, 3/8 X 1 IN. LG 1795 (13841)		EA	28	*	*	*	*	*	*	*	*	17	29
	WASHER, THREAD SEAL 7500 (02697)		EA	25	*	*	*	*	*	*	*	*	17	30
	PLATE, COVER: HYDRAULIC TANK 18913 (13841)		EA	1	*	*	*	*	*	*	*	*	17	31
	GASKET: COVER PLATE 21139 (13841)		EA	1	*	*	*	*	*	*	*	*	17	32
	RESERVOIR 18912 (13841)		EA	1									17	33
5305-206-3518	SCREW, CAP, HEXAGON HEAD: FILTER GAGE GUARD MTG, 1/2-13 X 1 1/4 IN. LG		EA	2	*	*	*	*	*	*	*	*	18	1
5310-550-1680	WASHER, LOCK: FILTER GAGE GUARD MTG, 1/2 IN.		EA	2	*	*	*	*	*	*	*	*	18	2
	GUARD, FILTER GAGE		EA	1									18	3
	FILTER ASSEMBLY: HYDRAULIC FLUID M3157 (92863)		EA	1	*	*	*	*	*	*	*	*	18	4
6685-410-1921	GAGE ASSEMBLY 909020-2000 (92863)		EA	1	*	*	*	*	*	*	*	*	18	5
	BOLT, HEAD: HYDRAULIC FILTER M2933-8 (92863)		EA	4									18	6
	HEAD ASSEMBLY, FILTER M3157-2000-2 (92863)		EA	1									18	7
	VALVE ASSEMBLY M3157-9-20 (92863)		EA	1									18	8
	HEAD 36546 (13841)		EA	1									18	9
	SEAL, HOUSING 25000-3 (92863)		EA	1	*	*	*	*	*	*	*	*	18	10
2520-132-3158	FILTER ELEMENT: FLUID PRESSURE 576366-5110 (92863)		EA	1	*	*	*	*	*	*	*	*	18	11
	COCK, DRAIN: 3/8 IN. NPT 5LA2-1-2-75-10 (92863)		EA	1	*	*	*	*	*	*	*	*	18	12
	HOUSING, FILTER 255-000-1 (92863)		EA	1									18	13
5305-724-5910	SCREW, CAP, HEXAGON HEAD: PUMP MTG, 5/8-11 X 1 1/2 IN. LG 1940 (13841)		EA	2	*	*	*	*	*	*	*	*	19	1

(1) SMR CODE	(2) FEDERAL STOCK NUMBER	(3) DESCRIPTION REF NUMBER & MFR CODE	USABLE ON CODE	(4) UNIT OF MEAS	(5) QTY INC IN UNIT	(6) 30-DAY DS MAINT ALLOWANCE (a) 1-20	(b) 21-50	(c) 51-100	(7) 30-DAY GS MAINT ALLOWANCE (a) 1-20	(b) 21-50	(c) 51-100	(8) 1-YR ALW PER 100 EQUIP CNTGY	(9) DEPOT MAINT ALW PER 100 EQUIP	(10) ILLUSTRATION (a) FIG. NO.	(b) ITEM NO.
P O	5310-820-6653	WASHER, LOCK: PUMP MTG, 5/8 IN. 1890 (13841)		EA	2	*	*	*	*	*	*	*	*	19	2
P O R		PUMP ASSEMBLY: HYDRAULIC CRANE 3525V25A17-13CC10A (62983)		EA	1									19	
P H		BOLT, MACHINE: COVER MTG, 1/2-13 X 2 1/2 IN. LG 11163 (62983)		EA	4				*	*	*	*	*	19	3
X2H		COVER ASSEMBLY, PUMP 231532 (62983)		EA	1									19	4
X1		SCREW 289472 (62983)		EA	2									19	5
X1		PIN 229662 (62983)		EA	2									19	6
X1		PLATE 326983 (62983)		EA	1									19	7
X1		RING 326986 (62983)		EA	1									19	8
X1		VANE KIT 922710 (62983)		EA	1									19	9
X1		ROTOR 270597 (62983)		EA	1									19	10
X1		PLATE 326981 (62983)		EA	1									19	11
X1	3805-772-7652	PACKING 154095 (62983)		EA	1									19	12
X1		RETAINER, PACKING 271806 (62983)		EA	1									19	13
X1		PACKING, PREFORMED 154092 (62983)		EA	1									19	14
X1		PACKING, PREFORMED 154078 (62983)		EA	1									19	15
X1		RETAINER 271789 (62983)		EA	1									19	16
P H		BOLT, MACHINE: PUMP HOUSING, 5/8-11 X 7 IN. LG 42955 (62983)		EA	4				*	*	*	*	*	19	17
X2H		HOUSING, INLET 230189 (62983)		EA	1									19	18
X1		PIN 280031 (62983)		EA	1									19	19
X1		SCREW 289475 (62983)		EA	2									19	20
X1		PLATE ASSEMBLY 325450 (62983)		EA	1									19	21
X1		BUSHING 327009 (62983)		EA	1									19	22
X1		RING 319396 (62983)		EA	1									19	23
X1		VANE KIT 922700 (62983)		EA	1									19	24
X1		ROTOR 262154 (62983)		EA	1									19	25
X1		PLATE 325452 (62983)		EA	1									19	26
X1		RETAINER 263717 (62983)		EA	1									19	27

(1) SMR CODE	(2) FEDERAL STOCK NUMBER	(3) DESCRIPTION REF NUMBER & MFR CODE	USABLE ON CODE	(4) UNIT OF MEAS	(5) QTY INC IN UNIT	(6) 30-DAY OS MAINT ALLOWANCE (a) 1-20	(b) 21-50	(c) 51-100	(7) 30-DAY GS MAINT ALLOWANCE (a) 1-20	(b) 21-50	(c) 51-100	(8) 1-YR ALW PER 100 EQUIP CNTGY	(9) DEPOT MAINT ALW PER 100 EQUIP	(10) ILLUSTRATION (a) FIG. NO.	(b) ITEM NO.
X1		PACKING 154084 (62983)		EA	1									19	28
X1		PACKING 154098 (62983)		EA	1									19	29
X1		RETAINER 271811 (62983)		EA	1									19	30
X1		PACKING 154101 (62983)		EA	1									19	31
P H	4320-868-9569	RING, RETAINING 119982 (62983)		EA	1				*	*	*	*	*	19	32
P H	4320-788-4509	BEARING, BALL		EA	1				*	*	*	*	*	19	33
P H	4320-869-6164	RING, LOCK: SHAFT BEARING 193144 (62983)		EA	1				*	*	*	*	*	19	34
P H		SHAFT, PUMP 360911 (62983)		EA	1				*	*	*	*	*	19	35
P H	5310-118-6314	WASHER, THRUST 193220 (62983)		EA	1				*	*	*	*	*	19	36
X1		SEAL 193428 (62983)		EA	1									19	37
X1		PACKING 200465 (62983)		EA	1									19	38
X2H		BODY, PUMP END 212647 (62983)		EA	1									19	39
P O		GASKET: PUMP MTG 5117061 (72582)		EA	1	*	*	*	*	*	*	*	*	19	40
P O	5305-269-3213	SCREW, CAP, HEXAGON HEAD: COUPLING SHAFT, 3/8-16 X 1 1/4 IN. LG 1796 (13841)		EA	4	*	*	*	*	*	*	*	*	20	1
P O	5310-018-7123	WASHER, LOCK: COUPLING SHAFT, 3/8 IN. 1887 (13841)		EA	4	*	*	*	*	*	*	*	*	20	2
P O		SHAFT, COUPLING: PUMP DRIVE 17104 (13841)		EA	1	*	*	*	*	*	*	*	*	20	3
P O		KEY, MACHINE: PUMP COUPLING, 5/16 X 5/16 X 1 IN. LG 12075 (13841)		EA	1	*	*	*	*	*	*	*	*	20	4
P O		COUPLING, FLEXIBLE 17118 (13841)		EA	1	*	*	*	*	*	*	*	*	20	5
X20		KEY, MACHINE: GEAR BOX SHAFT 12077 (13841)		EA	1									20	6
P O		NUT, PLAIN, HEXAGON: GEAR BOX MTG, 5/8-18 THD SIZE 3575 (13841)		EA	2	*	*	*	*	*	*	*	*	20	7
P O	5310-012-1574	WASHER, LOCK: GEAR BOX MTG, 5/8 IN. 121574 (24617)		EA	2	*	*	*	*	*	*	*	*	20	8
P O		SCREW, CAP, SOCKET HEAD: GEAR BOX MTG, 5/8-18 X 2 IN. LG 10853 (13841)		EA	2	*	*	*	*	*	*	*	*	20	9
P O		SCREW, CAP, SOCKET HEAD: GEAR BOX MTG, 5/8-18 X 1 1/4 IN. LG 10854 (13841)		EA	2	*	*	*	*	*	*	*	*	20	10
P O	5310-012-1574	WASHER, LOCK: GEAR BOX MTG, 5/8 IN. 121574 (13841)		EA	2	*	*	*	*	*	*	*	*	20	11
P O S		GEAR CASE ASSEMBLY 17117 (13841)		EA	1									20	12

(1) SMR CODE	(2) FEDERAL STOCK NUMBER	(3) DESCRIPTION REF NUMBER & MFR CODE	USABLE ON CODE	(4) UNIT OF MEAS	(5) QTY INC IN UNIT	(6) 30-DAY DS MAINT ALLOWANCE (a) 1-20	(b) 21-50	(c) 51-100	(7) 30-DAY GS MAINT ALLOWANCE (a) 1-20	(b) 21-50	(c) 51-100	(8) 1-YR ALW PER 100 EQUIP CNTGY	(9) DEPOT MAINT ALW PER 100 EQUIP	(10) ILLUSTRATION (a) FIG. NO.	(b) ITEM NO.
P O		PLUG, PIPE: OIL DRAIN, 1/2 IN. NPT 3672 (13841)		EA	1	*	*	*	*	*	*	*	*	21	1
P O	5340-410-6763	PLUG, PIPE, VENTED: 3/4 IN. NPT 11154 (13841)		EA	1	*	*	*	*	*	*	*	*	21	2
P O		ELBOW, STREET: OIL LEVEL, 3/4 IN. NPT 1998 (13841)		EA	2	*	*	*	*	*	*	*	*	21	3
P O	5340-470-5529	PLUG, PIPE, VENTED: 1/8 IN. NPT 11161 (13841)		EA	1	*	*	*	*	*	*	*	*	21	4
P O	4730-278-0143	ELBOW, STREET: GEAR CASE, 1/8 IN. NPT		EA	1	*	*	*	*	*	*	*	*	21	5
P F		SCREW, CAP, HEXAGON HEAD: BEARING COVER, 1/4-20 X 3/4 IN. LG 1777 (13841)		EA	7	*	*	*	*	*	*	*	*	21	6
P F	5310-209-1869	WASHER, LOCK: BEARING COVER, 1/4 IN. 1885 (13841)		EA	4	*	*	*	*	*	*	*	*	21	7
X2F		COVER, BEARING 17112 (13841)		EA	1									21	8
P F		GASKET: BEARING COVER 17121 (13841)		EA	1	*	*	*	*	*	*	*	*	21	9
P F	5305-012-0233	SCREW, CAP, HEXAGON HEAD: COVER PLATE 120233 (24617)		EA	10	*	*	*	*	*	*	*	*	21	10
P F		WASHER, COPPER: COVER PLATE, 3/8 IN. 17122 (13841)		EA	10	*	*	*	*	*	*	*	*	21	11
P F		SCREW, CAP, SOCKET HEAD: COVER PLATE 10858 (13841)		EA	4	*	*	*	*	*	*	*	*	21	12
P F	5310-018-7123	WASHER, LOCK: COVER PLATE, 3/8 IN. 1887 (13841)		EA	4	*	*	*	*	*	*	*	*	21	13
X2F		PLATE, COVER 17119 (13841)		EA	1									21	14
P F		GASKET: COVER PLATE 17120 (13841)		EA	1	*	*	*	*	*	*	*	*	21	15
X2F		SCREW, MACHINE: FLAT COUNTERSUNK HEAD, 1/4 X 3/4 IN. LG 25384 (13841)		EA	2									21	16
X2F		CAP, SHAFT: BEARING RETAINER 17111 (13841)		EA	1									21	17
P F		BEARING, ROLLER SB22206S (92563)		EA	2	*	*	*	*	*	*	*	*	21	18
P F		GEAR, SHAFT: 17 TOOTH 17113 (13841)		EA	1	*	*	*	*	*	*	*	*	21	19
P F		KEY, MACHINE: PUMP GEAR, 5/16 IN. SQUARE, 1 IN. LG 12077 (13841)		EA	2	*	*	*	*	*	*	*	*	21	20
P F		BEARING, ROLLER SB22206S (92563)		EA	1	*	*	*	*	*	*	*	*	21	21
X2F		SHAFT, DRIVEN 17115 (13841)		EA	1									21	22
P F		BEARING, BALL, ANNULAR: DRIVE 19105Z (76062)		EA	1	*	*	*	*	*	*	*	*	21	23
P F		BEARING, ROLLER: DRIVE SB22210S (92563)		EA	1	*	*	*	*	*	*	*	*	21	24

(1) SMR CODE	(2) FEDERAL STOCK NUMBER	(3) DESCRIPTION REF NUMBER & MFR CODE	USABLE ON CODE	(4) UNIT OF MEAS	(5) QTY INC IN UNIT	(6) 30-DAY DS MAINT ALLOWANCE (a) 1-20	(b) 21-50	(c) 51-100	(7) 30-DAY GS MAINT ALLOWANCE (a) 1-20	(b) 21-50	(c) 51-100	(8) 1-YR ALW PER 100 EQUIP CNTGY	(9) DEPOT MAINT ALW PER 100 EQUIP	(10) ILLUSTRATION (a) FIG. NO.	(b) ITEM NO.
P F		GEAR, SHAFT: DRIVE, 26 TOOTH 17114 (13841)		EA	1	*	*	*	*	*	*	*	*	21	25
P F		KEY, MACHINE: PUMP GEAR, 5/16 IN. SQUARE, 1 IN. LG		EA	1	*	*	*	*	*	*	*	*	21	26
P F		SLEEVE, BEARING: GEAR 17116 (13841)		EA	1	*	*	*	*	*	*	*	*	21	27
P F		SEAL, PLAIN: GEAR SHAFT 13548 (80201)		EA	1	*	*	*	*	*	*	*	*	21	28
X2F		CASE, GEAR 17110 (13841)		EA	1									21	29
		GROUP 07 - HYDRAULIC VALVES													
P F	5310-012-3221	NUT, PLAIN, HEXAGON: VALVE BANK MTG, 3/8-16 THD SIZE 1852 (13841)		EA	1	*	*	*	*	*	*	*	*	22	1
P F	5310-018-7123	WASHER, LOCK: VALVE BANK MTG, 3/8 IN. 1887 (13841)		EA	1	*	*	*	*	*	*	*	*	22	2
P F	5310-639-1497	WASHER, FLAT: VALVE BANK MTG, 3/8 IN.		EA	1	*	*	*	*	*	*	*	*	22	3
P F	5305-269-3218	SCREW, CAP, HEXAGON HEAD: VALVE BANK MTG, 3/8-16 X 2 1/2 IN. LG		EA	1	*	*	*	*	*	*	*	*	22	4
P F	5310-042-6895	NUT, PLAIN, HEXAGON: VALVE BANK MTG, 1/2-13 THD SIZE 1854 (13841)		EA	2	*	*	*	*	*	*	*	*	22	5
P F	5310-042-6895	WASHER, LOCK: VALVE BANK MTG, 1/2 IN. 1889 (13841)		EA	2	*	*	*	*	*	*	*	*	22	6
P F	5305-071-2073	SCREW, CAP, HEXAGON HEAD: VALVE BANK MTG, 1/2-13 X 2 1/2 IN. LG 1816 (13841)		EA	2	*	*	*	*	*	*	*	*	22	7
P O	5365-453-6632	RING, RETAINING: HANDLE LINK ROD 262711 (62983)		EA	2	*	*	*	*	*	*	*	*	22	8
X20		ROD, LINK 262724 (62983)		EA	1									22	9
X20		RING, RETAINING: LINK 122546 (62983)		EA	6									22	10
X20		LINK, HANDLE 261342 (62983)		EA	3									22	11
P O	5355-505-2949	KNOB, HANDLE: MAIN VALVE BANK CONTROL 111 (80813)		EA	3	*	*	*	*	*	*	*	*	22	12
P20		HANDLE, CONTROL: MAIN VALVE BANK 19005 (13841)		EA	3	*	*	*	*	*	*	*	*	22	13
P20		HANDLE, CONTROL 17143 (13841)		EA	1	*	*	*	*	*	*	*	*	22	13
P O		PACKING, PREFORMED: PLUG AND FITTING 53-16 (99103)		EA	6	*	*	*	*	*	*	*	*	22	14
P O		CONNECTOR, PIPE TO TUBE: HYDRAULIC LINES 54396 (13841)		EA	6	*	*	*	*	*	*	*	*	22	15
P O		PLUG, MACHINE THREAD: HOUSING		EA	2	*	*	*	*	*	*	*	*	22	16
P O		PACKING, PREFORMED: ELBOW 53-16 (99103)		EA	2	*	*	*	*	*	*	*	*	22	17
P O		ELBOW, TUBE: HYDRAULIC LINE		EA	1	*	*	*	*	*	*	*	*	22	18

(1) SMR CODE	(2) FEDERAL STOCK NUMBER	(3) DESCRIPTION REF NUMBER & MFR CODE	USABLE ON CODE	(4) UNIT OF MEAS	(5) QTY INC IN UNIT	(6) 30-DAY OS MAINT ALLOWANCE (a) 1-20	(b) 21-50	(c) 51-100	(7) 30-DAY GS MAINT ALLOWANCE (a) 1-20	(b) 21-50	(c) 51-100	(8) 1-YR ALW PER 100 EQUIP CNTGY	(9) DEPOT MAINT ALW PER 100 EQUIP	(10) ILLUSTRATION (a) FIG. NO.	(b) ITEM NO.
P O		ELBOW, TUBE: HYDRAULIC LINE 54398 (13841)		EA	1	*	*	*	*	*	*	*	*	22	19
P O	4730-082-1182	PLUG, PIPE		EA	1	*	*	*	*	*	*	*	*	22	20
P F R		VALVE BANK: MAIN CONTROL CM2N02R25DDBCL30-016 (62983)		EA	1	*	*	*	*	*	*	*	*	22	21
X2F	5310-833-9301	NUT, PLAIN, HEXAGON: VALVE STUD 1458 (62983)		EA	4									23	1
X2F		STUD, PLAIN: VALVE BANK 242094 (62983)		EA	4									23	2
P F	5340-833-3649	SHIM, SECTION 307197 (62983)		EA	12	*	*	*	*	*	*	*	*	23	3
X1		PACKING 226157 (62983) (PART OF SEAL KIT, FSN 4820-945-9018)		EA	12									23	4
X1		PACKING 226163 (62983) (PART OF SEAL KIT, FSN 4820-945-9018)		EA	3									23	5
P F		INLET SECTION: CONTROL VALVE CM2N02-R25030 (62983)		EA	1	*	*	*	*	*	*	*	*	23	6
X2F	5330-892-2503	PLUG, CONTROL VALVE 313868 (62983)		EA	1									23	7
X1		PACKING 184197 (62983) (PART OF SEAL KIT, FSN 4820-945-9018)		EA	1									23	8
P F	5340-833-3648	SPRING, HELICAL, COMPRESSION: VALVE 238834 (62983)		EA	1	*	*	*	*	*	*	*	*	23	9
P F		VALVE, CONTROL 319701 (62983)		EA	1	*	*	*	*	*	*	*	*	23	10
X2F	5305-833-3644	SCREW, CAP, HEXAGON HEAD: CAP MTG 1248 (62983)		EA	2									23	11
X2F	4820-839-1478	CAP, VALVE 257196 (62983)		EA	1									23	12
X1		PACKING 154018 (62983) (PART OF SEAL KIT, FSN 4820-945-9018)		EA	2									23	13
X2F	5330-833-3652	RETAINER, PACKING 242076 (62983)		EA	1									23	14
X2F		SCREW, MACHINE: SPRING GUIDE 1050 (62983)		EA	1									23	15
X2F	4820-839-1480	GUIDE, SPRING 242079 (62983)		EA	1									23	16
X2F	4820-839-1482	RETAINER, SPRING 206086 (62983)		EA	2									23	17
P F	3930-918-3760	SPRING, HELICAL, COMPRESSION: DETENT 206772 (62983)		EA	1	*	*	*	*	*	*	*	*	23	18
X1		PACKING 154010 (62983) (PART OF SEAL KIT, FSN 4820-945-9018)		EA	1									23	19
X1		RING 112694 (62983) (PART OF SEAL KIT, FSN 4820-945-9018)		EA	1									23	20

(1) SMR CODE	(2) FEDERAL STOCK NUMBER	(3) DESCRIPTION REF NUMBER & MFR CODE	USABLE ON CODE	(4) UNIT OF MEAS	(5) QTY INC IN UNIT	(6) 30-DAY DS MAINT ALLOWANCE (a) 1-20	(b) 21-50	(c) 51-100	(7) 30-DAY GS MAINT ALLOWANCE (a) 1-20	(b) 21-50	(c) 51-100	(8) 1-YR ALW PER 100 EQUIP CNTGY	(9) DEPOT MAINT ALW PER 100 EQUIP	(10) ILLUSTRATION (a) FIG. NO.	(b) ITEM NO.
X2F	4730-839-1522	PLUG, POPPET VALVE 242074 (62983)		EA	1									23	21
P F	3930-918-3761	SPRING, HELICAL, COMPRESSION: VALVE 242789 (62983)		EA	1	*	*	*	*	*	*	*	*	23	22
P F	4820-839-1512	VALVE, POPPET 242075 (62983)		EA	1	*	*	*	*	*	*	*	*	23	23
X2F	4730-839-1481	PLUG, PIPE: INLET SECTION 319962 (69283)		EA	1									23	24
X2F	4730-839-1520	PLUG, PIPE: BODY 7074 (62983)		EA	1									23	25
P F		OUTLET SECTION: CONTROL VALVE CM2N02-25CL30 (62983)		EA	1	*	*	*	*	*	*	*	*	24	1
X2F		SCREW, CAP, HEXAGON HEAD: CAP MTG 1250 (62983)		EA	2									24	2
X2F		PLUG, OUTLET SECTION 235416 (62983)		EA	2									24	3
P F		SPRING, HELICAL, COMPRESSION: PISTON 238085 (62983)		EA	2	*	*	*	*	*	*	*	*	24	4
P F		PISTON, FLOAT: DETENT 235415 (62983)		EA	2	*	*	*	*	*	*	*	*	24	5
X2F		CAP, OUTLET SECTION 252509 (62983)		EA	1									24	6
X1		PACKING 154018 (62983) (PART OF SEAL KIT, FSN 4820-945-9018)		EA	2									24	7
X2F		RETAINER 242076 (62983)		EA	1									24	8
X2F		SCREW, MACHINE: RETAINER 1050 (62983)		EA	1									24	9
X2F		GUIDE, SPRING 242079 (62983)		EA	1									24	10
P F		RING, RETAINING 237824 (62983)		EA	1	*	*	*	*	*	*	*	*	24	11
X2F		WASHER, FLAT: SPACER 252523 (62983)		EA	1									24	12
X2F		RETAINER, SPRING 206086 (62983)		EA	2									24	13
P F	3930-918-3760	SPRING, HELICAL, COMPRESSION: DETENT 206772 (62983)		EA	1	*	*	*	*	*	*	*	*	24	14
P F		DETENT, FLOAT 252515 (62983)		EA	1	*	*	*	*	*	*	*	*	24	15
X1		PACKING 154010 (62983) (PART OF SEAL KIT, FSN 4820-945-9018)		EA	1									24	16
X1		RING 112694 (62983) (PART OF SEAL KIT, FSN 4820-945-9018)		EA	1									24	17
X2F		PLUG, POPPET VALVE 242074 (62983)		EA	1									24	18
P F	3930-918-3761	SPRING, HELICAL, COMPRESSION: VALVE 242789 (62983)		EA	1	*	*	*	*	*	*	*	*	24	19

(1) SMR CODE	(2) FEDERAL STOCK NUMBER	(3) DESCRIPTION REF NUMBER & MFR CODE	USABLE ON CODE	(4) UNIT OF MEAS	(5) QTY INC IN UNIT	(6) 30-DAY OS MAINT ALLOWANCE (a) 1-20	(b) 21-50	(c) 51-100	(7) 30-DAY GS MAINT ALLOWANCE (a) 1-20	(b) 21-50	(c) 51-100	(8) 1-YR ALW PER 100 EQUIP CNTGY	(9) DEPOT MAINT ALW PER 100 EQUIP	(10) ILLUSTRATION (a) FIG. NO.	(b) ITEM NO.
P F	4820-839-1512	VALVE, POPPET 242075 (62983)		EA	1	*	*	*	*	*	*	*	*	24	20
P F		PACKING, PREFORMED: PLUG		EA	1									24	21
X2F		PLUG, BODY		EA	1									24	22
P2F		CENTER SECTION: CONTROL VALVE, HOIST CM2N02-25D30 (62983)		EA	1	*	*	*	*	*	*	*	*	25	1
X2F		SCREW, CAP, HEXAGON HEAD: CAP MTG 1248 (62983)		EA	2									25	2
X2F		CAP, CENTER SECTION 257196 (62983)		EA	1									25	3
X1		PACKING 154018 (62983) (PART OF SEAL KIT, FSN 4820-945-9D18)		EA	2									25	4
X2F		RETAINER, PACKING 242076 (62983)		EA	1									25	5
X2F		SCREW, MACHINE: GUIDE MTG 1050 (62983)		EA	1									25	6
X2F		GUIDE, SPRING 242079 (62983)		EA	1									25	7
X2F		RETAINER, SPRING 206086 (62983)		EA	2									25	8
P F	3930-918-3760	SPRING, HELICAL, COMPRESSION: SPOOL 206772 (62983)		EA	1	*	*	*	*	*	*	*	*	25	9
X1		PACKING 154010 (62983) (PART OF SEAL KIT, FSN 4820-945-9018)		EA	1									25	10
X1		RING 112694 (62983) (PART OF SEAL KIT, FSN 4820-945-9018)		EA	1									25	11
X2F		PLUG, POPPET VALVE 242074 (62983)		EA	1									25	12
P F	3930-918-3761	SPRING, HELICAL, COMPRESSION: VALVE 242789 (62983)		EA	1	*	*	*	*	*	*	*	*	26	13
P F	4820-839-1512	VALVE, POPPET 242075 (62983)		EA	1	*	*	*	*	*	*	*	*	25	14
P2F		VALVE, CENTERSECTION: CONTROL VALVE, BOOM UP AND DOWN CM2N02-25B30 (62983)		EA	1	*	*	*	*	*	*	*	*	26	1
X2F		SCREW, CAP, HEXAGON HEAD: CAP MTG 1248 (62983)		EA	2									26	2
X2F		CAP, CENTER SECTION 257196 (62983)		EA	1									26	3
X1		PACKING 154018 (62983) (PART OF SEAL KIT, FSN 4820-945-9018)		EA	1									26	4
X2F		RETAINER, PACKING 242076 (62983)		EA	1									26	5
X2F		SCREW, MACHINE: GUIDE MTG 1050 (62983)		EA	1									26	6

(1) SMR CODE	(2) FEDERAL STOCK NUMBER	(3) DESCRIPTION REF NUMBER & MFR CODE	USABLE ON CODE	(4) UNIT OF MEAS	(5) QTY INC IN UNIT	(6) 30-DAY DS MAINT ALLOWANCE (a) 1-20	(b) 21-50	(c) 51-100	(7) 30-DAY GS MAINT ALLOWANCE (a) 1-20	(b) 21-50	(c) 51-100	(8) 1-YR ALW PER 100 EQUIP CNTGY	(9) DEPOT MAINT ALW PER 100 EQUIP	(10) ILLUSTRATION (a) FIG. NO.	(b) ITEM NO.
X2F		GUIDE, SPRING 242079 (62983)		EA	1									26	7
X2F		RETAINER, SPRING 206086 (62983)		EA	2									26	8
P F	3930-918-3760	SPRING, HELICAL, COMPRESSION: SPOOL 206772 (62983)		EA	1	*	*	*	*	*	*	*	*	26	9
X1		PACKING 154010 (62983) (PART OF SEAL KIT, FSN 4820-945-9018)		EA	1									26	10
X1		RING 112694 (62983) (PART OF SEAL KIT, FSN 4820-945-9018)		EA	1									26	11
X2F		PLUG, POPPET VALVE 242074 (62983)		EA	1									26	12
P F	5310-012-3221	NUT, PLAIN, HEXAGON: OUTRIGGER VALVE BANK MTG, 3/8-16 THD SIZE 123221 (24617)		EA	3	*	*	*	*	*	*	*	*	27	1
P F	5310-479-6859	WASHER, LOCK: OUTRIGGER VALVE BANK MTG, 3/8 IN. 1887 (13841)		EA	3	*	*	*	*	*	*	*	*	27	2
P F	5305-269-3213	SCREW, CAP, HEXAGON HEAD: OUTRIGGER VALVE BANK MTG, 3/8-16 X 1 1/4 IN. LONG 1796 (13841)		EA	2	*	*	*	*	*	*	*	*	27	3
P F		SCREW, CAP, HEXAGON HEAD: 3/8-16 X 1 3/4 IN. LG 1798 (13841)		EA	1	*	*	*	*	*	*	*	*	27	3
P O	5310-920-0838	WASHER, SPECIAL: HANDLE ROD 245482 (62983)		EA	2	*	*	*	*	*	*	*	*	27	4
X20		ROD, HANDLE 245497 (62983)		EA	1									27	5
P O		KNOB, BLACK 95BLACK (80813)		EA	3	*	*	*	*	*	*	*	*	27	6
P O	5355-741-1761	KNOB, HANDLE: OUTRIGGER CONTROL 95RED (80813)		EA	4	*	*	*	*	*	*	*	*	27	7
P20		HANDLE, CONTROL: ACCESSORY 19007 (13841)		EA	1	*	*	*	*	*	*	*	*	27	8
P20		HANDLE, CONTROL: SWING 19006 (13841)		EA	1	*	*	*	*	*	*	*	*	27	9
P20		HANDLE, CONTROL: AXLE LOCKOUT 19008 (13841)		EA	1	*	*	*	*	*	*	*	*	27	10
P20		HANDLE, CONTROL: OUTRIGGER 19012 (13841)		EA	1	*	*	*	*	*	*	*	*	27	11
P20		HANDLE, CONTROL: OUTRIGGER 19013 (13841)		EA	1	*	*	*	*	*	*	*	*	27	12
P20		HANDLE, CONTROL: OUTRIGGER 19014 (13841)		EA	1	*	*	*	*	*	*	*	*	27	13
P20		HANDLE, CONTROL: OUTRIGGER 19015 (13841)		EA	1	*	*	*	*	*	*	*	*	27	14
X20		PIN, STRAIGHT, HEADLESS: HANDLE TO VALVE 2197 (62983)		EA	7									27	15
P O		ADAPTER, PIPE TO TUBE: HYDRAULIC LINES 54422 (13841)		EA	2	*	*	*	*	*	*	*	*	27	16

CODE	STOCK NUMBER	REF NUMBER & MFR CODE	USABLE ON CODE	UNIT OF MEAS	QTY INC IN UNIT	(a) 1-20	(b) 21-50	(c) 51-100	(a) 1-20	(b) 21-50	(c) 51-100	PER 100 EQUIP CNTGY	ALW PER 100 EQUIP	(a) FIG. NO.	(b) ITEM NO.
P O		ADAPTER, PIPE TO TUBE: HYDRAULIC LINES, 3/4 IN. TUBE 54421 (13841)		EA	12	*	*	*	*	*	*	*	*	27	17
P O		PACKING, PREFORMED: ADAPTER 53-10 (99103)		EA	14	*	*	*	*	*	*	*	*	27	18
P O		ELBOW, PIPE TO TUBE: HYDRAULIC LINE 54423 (13841)		EA	2	*	*	*	*	*	*	*	*	27	19
P O		PACKING, PREFORMED: ELBOW 53-12 (99103)		EA	2	*	*	*	*	*	*	*	*	27	20
P F R	3810-888-2978	VALVE BANK, OUTRIGGER CM11N02R20DBDDDDDE21-058 (62983)		EA	1	*	*	*	*	*	*	*	*	27	21
X2F	5310-012-3221	NUT, PLAIN, HEXAGON: VALVE STUD 1454 (62983)		EA	8									28	1
X2F		STUD, PLAIN: CONTROL VALVE 223157 (62983)		EA	4									28	2
P F		SHIM 307198 (62983)		EA	24	*	*	*	*	*	*	*	*	28	3
P F	3810-125-8671	VALVE, INLET CM11N02R20D21 (62983)		EA	1	*	*	*	*	*	*	*	*	28	4
X1		RETAINER 237736 (62983) (PART OF RING SET, FSN 5330-960-9332)		EA	1									28	5
X1		SEAL 226161 (62983) (PART OF RING SET, FSN 5330-960-9332)		EA	1									28	6
X1		SEAL 223493 (62983) (PART OF RING SET, FSN 5330-960-9332)		EA	1									28	7
X1		SEAL 223489 (62983) (PART OF RING SET, FSN 5330-960-9332)		EA	1									28	8
X2F	4730-674-6831	PLUG, INLET VALVE 186580 (62983)		EA	1									28	9
X1		PACKING 154129 (62983) (PART OF RING SET, FSN 5330-960-9332)		EA	1									28	10
P F	3930-918-1920	SPRING, HELICAL, COMPRESSION: VALVE 259871 (62983)		EA	1	*	*	*	*	*	*	*	*	28	11
P F	2530-034-4188	VALVE ASSEMBLY, CONTROL 232799 (62983)		EA	1	*	*	*	*	*	*	*	*	28	12
X2F	3930-867-1464	SCREW, MACHINE: RETAINER 282027 (62983)		EA	2									28	13
X2F		RETAINER, SLEEVE 284154 (62983)		EA	1									28	14
X1		PACKING 187000 (62983) (PART OF RING SET, FSN 5330-960-9332)		EA	1									28	15
X2F	2530-087-0369	SLEEVE, VALVE 284155 (62983)		EA	1									28	16
X2F	5310-867-1465	WASHER, C: SPOOL 284156 (62983)		EA	2									28	17
P F	3930-960-9326	SPRING, VALVE 246632 (62983)		EA	1	*	*	*	*	*	*	*	*	28	18

(1) SMR CODE	(2) FEDERAL STOCK NUMBER	(3) DESCRIPTION REF NUMBER & MFR CODE	USABLE ON CODE	(4) UNIT OF MEAS	(5) QTY INC IN UNIT	(6) 30-DAY OS MAINT ALLOWANCE (a) 1-20	(b) 21-50	(c) 51-100	(7) 30-DAY GS MAINT ALLOWANCE (a) 1-20	(b) 21-50	(c) 51-100	(8) 1-YR ALW PER 100 EQUIP CNTGY	(9) DEPOT MAINT ALW PER 100 EQUIP	(10) ILLUSTRATION (a) FIG. NO.	(b) ITEM NO.
X1		PACKING 282971 (62983) (PART OF RING SET, FSN 5330-960-9332)		EA	1									28	19
X1		RETAINER 286669 (62983) (PART OF RING SET, FSN 5330-960-9332)		EA	1									28	20
X1		PACKING 283856 (62983) (PART OF RING SET, FSN 5330-960-9332)		EA	1									28	21
X1		PACKING 154008 (62983) (PART OF RING SET, FSN 5330-960-9332)		EA	1									28	22
X1		RING 117717 (62983) (PART OF RING SET, FSN 5330-960-9332)		EA	1									28	23
X2F		PLUG 222640 (62983)		EA	1									28	24
P F		SPRING, BALL 223388 (62983)		EA	1	*	*	*	*	*	*	*	*	28	25
P F		BALL, BEARING: VALVE 1656 (62983)		EA	1	*	*	*	*	*	*	*	*	28	26
P F	3810-928-2670	OUTLET SECTION: CONTROL VALVE, OUTRIGGER CM11N02-20DL21 (62983)		EA	1	*	*	*	*	*	*	*	*	29	1
X1		RETAINER 237736 (62983) (PART OF RING SET, FSN 5330-960-9332)		EA	1									29	2
X1		SEAL 226161 (62983) (PART OF RING SET, FSN 5330-960-9332)		EA	1									29	3
X1		SEAL 223493 (62983) (PART OF RING SET, FSN 5330-960-9332)		EA	1									29	4
X1		SEAL 223489 (62983) (PART OF RING SET, FSN 5330-960-9332)		EA	1									29	5
X2F		SCREW, MACHINE: RETAINER MTG 282027 (62983)		EA	2									29	6
X2F		RETAINER, SLEEVE 284154 (62983)		EA	1									29	7
X1		PACKING 187000 (62983) (PART OF RING SET, FSN 5330-960-9332)		EA	1									29	8
X2F		SLEEVE, SPOOL 284155 (62983)		EA	1									29	9
X2F		WASHER, C: SPOOL 284156 (62983)		EA	2									29	10
P F	3930-960-9326	SPRING, VALVE 246632 (62983)		EA	1	*	*	*	*	*	*	*	*	29	11

CODE	STOCK NUMBER	REF NUMBER & MFR CODE	USABLE ON CODE	UNIT OF MEAS	QTY INC IN UNIT	1-20	21-50	51-100	1-20	21-50	51-100	100 EQUIP CNTGY	PER 100 EQUIP	FIG. NO.	ITEM NO.
X1		PACKING 282971 (62983) (PART OF RING SET, FSN 5330-960-9332)		EA	1									29	12
X1		RETAINER 286669 (62983) (PART OF RING SET, FSN 5330-960-9332)		EA	1									29	13
X1		PACKING 283856 (62983) (PART OF RING SET, FSN 5330-960-9332)		EA	1									29	14
X1		PACKING 154008 (62983) (PART OF RING SET, FSN 5330-960-9332)		EA	1									29	15
X1		RING 117717 (62983) (PART OF RING SET, FSN 5330-960-9332)		EA	1									29	16
X2F		PLUG 222640 (62983)		EA	1									29	17
P F		SPRING, BALL 223388 (62983)		EA	1	*	*	*	*	*	*	*	*	29	18
P F		BALL, BEARING: VALVE 1656 (62983)		EA	1	*	*	*	*	*	*	*	*	29	19
X2F		PLUG, PIPE 7076 (62983)		EA	1									29	20
P2F		CENTER SECTION: SWING CONTROL VALVE CM11N02-20B21 (62983)		EA	1	*	*	*	*	*	*	*	*	30	1
X1		RETAINER 237736 (62983) (PART OF RING SET, FSN 5330-960-9332)		EA	1									30	2
X1		SEAL 226161 (62983) (PART OF RING SET, FSN 5330-960-9332)		EA	1									30	3
X1		SEAL 223493 (62983) (PART OF RING SET, FSN 5330-960-9332)		EA	1									30	4
X1		SEAL 223489 (62983) (PART OF RING SET, FSN 5330-960-9332)		EA	1									30	5
X2F		SCREW, MACHINE: RETAINER MTG 282027 (62983)		EA	2									30	6
X2F		RETAINER, SLEEVE 284154 (62983)		EA	1									30	7
X1		PACKING 187000 (62983) (PART OF RING SET, FSN 5330-960-9332)		EA	1									30	8
X2F		SLEEVE, VALVE 284155 (62983)		EA	1									30	9
X2F		WASHER, C: SPOOL 284156 (62983)		EA	2									30	10
P F	3930-960-9326	SPRING, VALVE 246632 (62983)		EA	1	*	*	*	*	*	*	*	*	30	11

(1) SMR CODE	(2) FEDERAL STOCK NUMBER	(3) DESCRIPTION REF NUMBER & MFR CODE	USABLE ON CODE	(4) UNIT OF MEAS	(5) QTY INC IN UNIT	(6) 30-DAY DS MAINT ALLOWANCE (a) 1-20	(b) 21-50	(c) 51-100	(7) 30-DAY GS MAINT ALLOWANCE (a) 1-20	(b) 21-50	(c) 51-100	(8) 1-YR ALW PER 100 EQUIP CNTGY	(9) DEPOT MAINT ALW PER 100 EQUIP	(10) ILLUSTRATION (a) FIG. NO.	(b) ITEM NO.
X1		PACKING 282971 (62983) (PART OF RING SET, FSN 5330-960-9332)		EA	1									30	12
X1		RETAINER 286669 (62983) (PART OF RING SET, FSN 5330-960-9332)		EA	1									30	13
X1		PACKING 283856 (62983) (PART OF RING SET, FSN 5330-960-9332)		EA	1									30	14
X1		PACKING 154008 (62983) (PART OF RING SET, FSN 5330-960-9332)		EA	1									30	15
X1		RING 117717 (62983) (PART OF RING SET, FSN 5330-960-9332)		EA	1									30	16
X2F		PLUG 22640 (62983)		EA	1									30	17
P2F		CENTER SECTION: CONTROL VALVE, LOCK AND OUTRIGGER CM11N02-2QD21 (62983)		EA	4	*	*	*	*	*	*	*	*	31	1
X1		RETAINER 237736 (62983) (PART OF RING SET, FSN 5330-960-9332)		EA	4									31	2
X1		SEAL 226161 (62983) (PART OF RING SET, FSN 5330-960-9332)		EA	4									31	3
X1		SEAL 223493 (62983) (PART OF RING SET, FSN 5330-960-9332)		EA	4									31	4
X1		SEAL 223489 (62983) (PART OF RING SET, FSN 5330-960-9332)		EA	4									31	5
X2F		SCREW, MACHINE: RETAINER MTG 282027 (62983)		EA	8									31	6
X2F		RETAINER, SLEEVE 284154 (62983)		EA	4									31	7
X1		PACKING 187000 (62983) (PART OF RING SET, FSN 5330-960-9332)		EA	4									31	8
X2F		SLEEVE, SPOOL 284155 (62983)		EA	4									31	9
X2F		WASHER, C: SPOOL 284156 (62983)		EA	8									31	10
P F	3930-960-9326	SPRING, VALVE 246632 (62983)		EA	4	*	*	*	*	*	*	*	*	31	11
X1		PACKING 282971 (62983) (PART OF RING SET, FSN 5330-960-9332)		EA	4									31	12
X1		RETAINER 286669 (62983) (PART OF RING SET, FSN 5330-960-9332)		EA	4									31	13

(1) SMR CODE	(2) FEDERAL STOCK NUMBER	(3) DESCRIPTION REF NUMBER & MFR CODE	USABLE ON CODE	(4) UNIT OF MEAS	(5) QTY INC IN UNIT	(6) 30-DAY DS MAINT ALLOWANCE (a) 1-20	(b) 21-50	(c) 51-100	(7) 30-DAY GS MAINT ALLOWANCE (a) 1-20	(b) 21-50	(c) 51-100	(8) 1-YR ALW PER 100 EQUIP CNTGY	(9) DEPOT MAINT ALW PER 100 EQUIP	(10) ILLUSTRATION (a) FIG. NO.	(b) ITEM NO.
X1		PACKING, PREFORMED 283856 (62983) (PART OF RING SET, FSN 5330-960-9332)		EA	4									31	14
X1		PACKING 154008 (62983) (PART OF RING SET, FSN 5330-960-9332)		EA	4									31	15
X1		RING 117717 (62983) (PART OF RING SET, FSN 5330-960-9332)		EA	4									31	16
X2F		PLUG 22640 (62983)		EA	4									31	17
P F		SPRING, BALL 223388 (62983)		EA	4	*	*	*	*	*	*	*	*	31	18
P F		BALL, BEARING: VALVE 1656 (62983)		EA	4	*	*	*	*	*	*	*	*	31	19
P O		NUT, PLAIN, HEXAGON: CLAMP MTG, 5/16-18 THD SIZE 1851 (13841)		EA	2	*	*	*	*	*	*	*	*	32	1
P O		WASHER, LOCK: CLAMP MTG, 5/16 IN. 1886 (13841)		EA	2	*	*	*	*	*	*	*	*	32	2
P O		SCREW, CAP, HEXAGON HEAD: CLAMP MTG, 5/16-18 X 3/4 IN. LG 1783 (13841)		EA	1	*	*	*	*	*	*	*	*	32	3
P O		SCREW, CAP, HEXAGON HEAD: CLAMP, 5/16-18 X 1 1/2 IN. LG 1786 (13841)		EA	1	*	*	*	*	*	*	*	*	32	4
X20		CLAMP ASSEMBLY 17167 (13841)		EA	1									32	5
P O	5305-269-3216	SCREW, CAP, HEXAGON HEAD: VALVE MTG, 3/8-16 X 2 IN. LG		EA	10	*	*	*	*	*	*	*	*	32	6
P O	5310-680-7297	WASHER, LOCK: VALVE MTG, 3/8 IN.		EA	10	*	*	*	*	*	*	*	*	32	7
		GROUP 08 - SUPERSTRUCTURE													
P O	3815-735-2412	WEDGE, CABLE WS5 (48170)		EA	1	*	*	*	*	*	*	*	*	33	1
P O	3940-807-7527	BLOCK ASSEMBLY, TACKLE 20319 (13841)		EA	1	*	*	*	*	*	*	*	*	33	2
P O	5310-012-4595	NUT, PLAIN, HEXAGON: PLATE, 3/4-10 THD SIZE 1856 (13841)		EA	3	*	*	*	*	*	*	*	*	33	3
P O	5310-013-1046	WASHER, LOCK: PLATE 3/4 IN. 1891 (13841)		EA	3	*	*	*	*	*	*	*	*	33	4
X20		BOLT, MACHINE: PLATE, 3/4-10 X 7 1/4 IN. LG, SQUARE HEAD 1172 (13841)		EA	3									33	5
X20		SPACER, LARGE 20265 (13841)		EA	2									33	6
X20		BLOCK, BECKET 20289 (13841)		EA	1									33	7
P O	5310-012-3221	NUT, PLAIN, HEXAGON: SPACER MTG, 3/8-16 THD SIZE 1852 (13841)		EA	4	*	*	*	*	*	*	*	*	33	8
P O	5310-018-7123	WASHER, LOCK: SPACER MTG, 3/8 IN. 1887 (13841)		EA	4	*	*	*	*	*	*	*	*	33	9

(1) SMR CODE	(2) FEDERAL STOCK NUMBER	(3) DESCRIPTION REF NUMBER & MFR CODE	USABLE ON CODE	(4) UNIT OF MEAS	(5) QTY INC IN UNIT	(6) 30-DAY DS MAINT ALLOWANCE (a) 1-20	(b) 21-50	(c) 51-100	(7) 30-DAY GS MAINT ALLOWANCE (a) 1-20	(b) 21-50	(c) 51-100	(8) 1-YR ALW PER 100 EQUIP CNTGY	(9) DEPOT MAINT ALW PER 100 EQUIP	(10) ILLUSTRATION (a) FIG. NO.	(b) ITEM NO.
X20		SCREW, CAP, HEXAGON HEAD: SPACER MTG, 3/8-16 X 7 IN. LG 1037 (13841)		EA	4									33	10
X20		SPACER, PIPE: CENTER PLATE 20266 (13841)		EA	8									33	11
P O	5310-017-4833	NUT, PLAIN, HEXAGON: SHAFT, 1 1/4-7 THD SIZE 1859 (13841)		EA	1	*	*	*	*	*	*	*	*	33	12
P O	5310-060-9435	WASHER, LOCK: SHAFT, 1 1/4 IN. 131050 (24617)		EA	1	*	*	*	*	*	*	*	*	33	13
P O		WASHER, FLAT: SHAFT, 1 1/4 IN. 1879 (13841)		EA	1	*	*	*	*	*	*	*	*	33	14
X20		SHAFT, SHEAVE 20263 (13841)		EA	1									33	15
X20		HOOK, SWIVEL 6933 (13841)		EA	1									33	16
X20		PLATE, SIDE 27996 (13841)		EA	1									33	17
X20		PLATE, SIDE 20264 (13841)		EA	1									33	18
X20	3815-756-1338	PLATE, CENTER 20267 (13841)		EA	1									33	19
P O	3110-198-1389	RING, BEARING, INNER M124 (92563)		EA	4	*	*	*	*	*	*	*	*	33	20
P O		RACE AND ROLLERS: OUTER BEARING M028 (92563)		EA	4	*	*	*	*	*	*	*	*	33	21
P O	3815-756-1212	SHEAVE, ROPE 19233 (13841)		EA	2	*	*	*	*	*	*	*	*	33	22
P O	4730-050-4208	FITTING, LUBRICATION: 1/8 IN. NPT MS15003-1 (96906)		EA	2	*	*	*	*	*	*	*	*	33	23
P O		PIN, SAFETY: WEDGE SOCKET PIN 8607 (13841)		EA	1	*	*	*	*	*	*	*	*	34	1
P O		WASHER, FLAT: WEDGE SOCKET PIN, 1 IN. 1877 (13841)		EA	1	*	*	*	*	*	*	*	*	34	2
X20		PIN, STRAIGHT, HEADED: CABLE SOCKET 18718 (13841)		EA	1									34	3
P O		SOCKET, WEDGE: CABLE 3778 (48170)		EA	1	*	*	*	*	*	*	*	*	34	4
P O		PIN, COTTER: RETAINING PIN, 1/4 IN. DIA, 2 IN. LG 2431 (13841)		EA	4	*	*	*	*	*	*	*	*	34	5
X20		PIN, STRAIGHT, HEADLESS: BOOM HEAD RETAINING 19250 (13841)		EA	2									34	6
X20		HEAD ASSEMBLY, BOOM 18880 (13841)		EA	1									34	7
P O	5310-012-4595	NUT, PLAIN, HEXAGON: SHEAVE SPACER MTG, 3/4-10 THD SIZE 1856 (13841)		EA	2	*	*	*	*	*	*	*	*	34	8
P O	5310-013-1046	WASHER, LOCK: SHEAVE SPACER MTG, 3/4 IN. 1891 (13841)		EA	2	*	*	*	*	*	*	*	*	34	9
X20		SPACER, PIPE: SHEAVE 19235 (13841)		EA	2									34	10
X20		SCREW, CAP, HEXAGON HEAD: SHEAVE SPACER MTG, 3/4-10 X 7 1/2 IN. LG 1181 (13841)		EA	2									34	11

(1) SMR CODE	(2) FEDERAL STOCK NUMBER	(3) DESCRIPTION REF NUMBER & MFR CODE	USABLE ON CODE	(4) UNIT OF MEAS	(5) QTY INC IN UNIT	(6) 30-DAY DS MAINT ALLOWANCE (a) 1-20	(b) 21-50	(c) 51-100	(7) 30-DAY GS MAINT ALLOWANCE (a) 1-20	(b) 21-50	(c) 51-100	(8) 1-YR ALW PER 100 EQUIP CNTGY	(9) DEPOT MAINT ALW PER 100 EQUIP	(10) ILLUSTRATION (a) FIG. NO.	(b) ITEM NO.
X20	5310-274-8942	NUT, SELF-LOCKING, HEXAGON: SHEAVE SHAFT, 1 1/2-5 THD SIZE 49TU246 (72962)		EA	1									34	12
P O	4730-050-4208	FITTING, LUBRICATION: SHAFT, 1/8 IN. NPT MS15003-1 (96906)		EA	2	*	*	*	*	*	*	*	*	34	13
P O	3810-756-1468	SHAFT, HEAD ASSEMBLY 19427 (13841)		EA	1	*	*	*	*	*	*	*	*	34	14
P O	3110-198-1389	RING, BEARING, INNER: SHEAVE M124 (92563)		EA	4	*	*	*	*	*	*	*	*	34	15
P O		RACE AND ROLLERS, OUTER BEARING: SHEAVE M028 (92563)		EA	4	*	*	*	*	*	*	*	*	34	16
P O	3815-756-1212	SHEAVE, CABLE 19233 (13841)		EA	2	*	*	*	*	*	*	*	*	34	17
X20		HEAD, BOOM 20231 (13841)		EA	1									34	18
X20		EXTENSION HEAD ASSEMBLY 18881 (13841)		EA	1									35	
P O	5310-012-4595	NUT, PLAIN, HEXAGON: SHEAVE SPACER MTG, 3/4-10 THD SIZE 1856 (13841)		EA	2	*	*	*	*	*	*	*	*	35	1
P O	5310-013-1046	WASHER, LOCK: SHEAVE SPACER MTG, 3/4 IN. 1891 (13841)		EA	2	*	*	*	*	*	*	*	*	35	2
X20		SPACER, PIPE: SHEAVE 19235 (13841)		EA	2									35	3
X20		SCREW, CAP, HEXAGON HEAD: SHEAVE SPACER MTG, 3/4-10 X 7 1/2 IN. LG 1181 (13841)		EA	2									35	4
X20		NUT, SELF-LOCKING, HEXAGON: SHEAVE SHAFT, 1 1/2-5 THD SIZE 49TU246 (72962)		EA	1									35	5
P O	4730-050-4208	FITTING, LUBRICATION: SHEAVE BEARINGS MS15003-1 (96906)		EA	2	*	*	*	*	*	*	*	*	35	6
P O	3810-756-1468	SHAFT, EXTENSION ASSEMBLY 19427 (13841)		EA	1	*	*	*	*	*	*	*	*	35	7
P O	3110-198-1389	RING, BEARING, INNER: SHEAVE M124 (92563)		EA	4	*	*	*	*	*	*	*	*	35	8
P O		RACE AND ROLLER, OUTER BEARING: SHEAVE M028 (92563)		EA	4	*	*	*	*	*	*	*	*	35	9
P O	3815-756-1212	SHEAVE, CABLE 19233 (13841)		EA	2	*	*	*	*	*	*	*	*	35	10
X20		HEAD, EXTENSION 20262 (13841)		EA	1									35	11
P O		SCREW, CAP, HEXAGON HEAD: INDICATOR MTG, 3/8-16 X 5/8 IN. LG 1187 (13841)		EA	3	*	*	*	*	*	*	*	*	36	1
P O	5310-018-7123	WASHER, LOCK: INDICATOR MTG, 3/8 IN. 1887 (13841)		EA	3	*	*	*	*	*	*	*	*	36	2
P O	3810-462-2289	ANGLE INDICATOR ASSEMBLY 20526 (13841)		EA	1	*	*	*	*	*	*	*	*	36	3
P O		SCREW, CAP, HEXAGON HEAD: POINTER MTG, 1/4-20 X 1/2 IN. LG 1770 (13841)		EA	1	*	*	*	*	*	*	*	*	36	4
P O	5310-209-1869	WASHER, LOCK: POINTER MTG, 1/4 IN. 1885 (13841)		EA	1	*	*	*	*	*	*	*	*	36	5

(1) SMR CODE	(2) FEDERAL STOCK NUMBER	(3) DESCRIPTION REF NUMBER & MFR CODE	USABLE ON CODE	(4) UNIT OF MEAS	(5) QTY INC IN UNIT	(6) 30-DAY DS MAINT ALLOWANCE (a) 1-20	(b) 21-50	(c) 51-100	(7) 30-DAY GS MAINT ALLOWANCE (a) 1-20	(b) 21-50	(c) 51-100	(8) 1-YR ALW PER 100 EQUIP CNTGY	(9) DEPOT MAINT ALW PER 100 EQUIP	(10) ILLUSTRATION (a) FIG. NO.	(b) ITEM NO.
P O		POINTER, INDICATOR 23402 (13841)		EA	1	*	*	*	*	*	*	*	*	36	6
P O		SCREW, MACHINE: BEARING RETAINER MTG, NO. 10-24 X 1/2 IN. LG 25388 (13841)		EA	4	*	*	*	*	*	*	*	*	36	7
X1		RETAINER, BEARING 23404 (13841)		EA	1									36	8
P O	3110-185-6484	NUT, PLAIN, ROUND: BEARING STUD N03 (43334)		EA	1	*	*	*	*	*	*	*	*	36	9
P O	3810-186-0962	WASHER, KEY: BEARING STUD W03 (43334)		EA	1	*	*	*	*	*	*	*	*	36	10
P O		STUD, BEARING 23403 (13841)		EA	1	*	*	*	*	*	*	*	*	36	11
P O	3110-144-8601	BEARING, BALL, ANNULAR: POINTER 773L03 (43334)		EA	1	*	*	*	*	*	*	*	*	36	12
X1		PLATE 20525 (13841)		EA	1									36	13
X1		PLATE 20527 (13841)		EA	1									36	14
X20		CLIP: HAIR PIN, 3/16 IN. 1HP146 (73287)		EA	2									37	1
X20		PIN, ANCHOR 20269 (13841)		EA	2									37	2
P O		PIN, COTTER: ARM RETAINING, 3/8 IN. DIA, 2 IN. LG 2436 (13841)		EA	2	*	*	*	*	*	*	*	*	37	3
X20		WASHER, FLAT: ARM MTG 1881 (13841)		EA	2									37	4
P O	5310-042-6895	NUT, PLAIN, HEXAGON: ARM BRACE PLATE MTG, 1/2-13 THD SIZE 1854 (13841)		EA	6	*	*	*	*	*	*	*	*	37	5
P O	5310-042-6895	WASHER, LOCK: ARM BRACE PLATE MTG, 1/2 IN. 1889 (13841)		EA	6	*	*	*	*	*	*	*	*	37	6
P O	5305-527-4193	SCREW, CAP, HEXAGON HEAD: ARM BRACE PLATE MTG, 1/2-13 X 1 1/4 IN. LG 1811 (13841)		EA	6	*	*	*	*	*	*	*	*	37	7
X20		ARM, ANTIROTATION: LEFT HAND 18792 (13841)		EA	1									37	8
X20		ARM, ANTIROTATION: RIGHT HAND 18793 (13841)		EA	1									37	9
X20		PLATE, ARM BRACE 21699 (13841)		EA	1									37	10
P O		SCREW, CAP, HEXAGON HEAD: BOOM MTG, 1-8 X 2 1/4 IN. LG 1173 (13841)		EA	2	*	*	*	*	*	*	*	*	38	1
P O	5310-584-7889	WASHER, LOCK: BOOM MTG, 1 IN. 131048 (24617)		EA	2	*	*	*	*	*	*	*	*	38	2
X20		WASHER, FLAT: BOOM MTG 20250 (13841)		EA	2									38	3
X20		SHAFT, STRAIGHT, BOOM PIVOT 20249 (13841)		EA	1									38	4
X20		KEY, MACHINE: PIVOT SHAFT, 3/8 IN. SQUARE, 2 1/4 IN. LG 12059 (13841)		EA	1									38	5
P O		FITTING, LUBRICATION: BOOM PIVOT AND CYLINDER PIN MS15004-2 (96906)		EA	2	*	*	*	*	*	*	*	*	38	6

(1) SMR CODE	(2) FEDERAL STOCK NUMBER	(3) DESCRIPTION REF NUMBER & MFR CODE	USABLE ON CODE	(4) UNIT OF MEAS	(5) QTY INC IN UNIT	(6) 30-DAY OS MAINT ALLOWANCE (a) 1-20	(b) 21-50	(c) 51-100	(7) 30-DAY GS MAINT ALLOWANCE (a) 1-20	(b) 21-50	(c) 51-100	(8) 1-YR ALW PER 100 EQUIP CNTGY	(9) DEPOT MAINT ALW PER 100 EQUIP	(10) ILLUSTRATION (a) FIG. NO.	(b) ITEM NO.
P O	4730-050-4208	FITTING, LUBRICATION: BEARING RETAINER MS15003-1 (96906)		EA	5	*	*	*	*	*	*	*	*	38	7
P O	5305-725-4183	SCREW, CAP, HEXAGON HEAD: ECCENTRIC PIN, MTG, 1/2-20 X 1 1/2 IN. LG 1840 (13841)		EA	1	*	*	*	*	*	*	*	*	38	8
P O	5310-042-6895	WASHER, LOCK: ECCENTRIC PIN MTG, 1/2 IN. 1889 (13841)		EA	1	*	*	*	*	*	*	*	*	38	9
X20		PIN, ECCENTRIC 20255 (13841)		EA	1									38	10
P O	3815-756-1485	BUSHING, SLEEVE: ROLLER 5121 (13841)		EA	2	*	*	*	*	*	*	*	*	38	11
P O	3815-756-1626	ROLLER, SLEEVE 20254 (13841)		EA	1	*	*	*	*	*	*	*	*	38	12
P O	5305-724-5910	SCREW, CAP, HEXAGON HEAD: RETAINER MTG, 5/8-11 X 1 1/2 IN. LG 1109 (13841)		EA	8	*	*	*	*	*	*	*	*	38	13
P O	5310-820-6653	WASHER, LOCK: RETAINER MTG, 5/8 IN. 1890 (13841)		EA	8	*	*	*	*	*	*	*	*	38	14
P O	3815-756-1473	ROLLER ASSEMBLY, CRANE 20256 (13841)		EA	1	*	*	*	*	*	*	*	*	38	15
P O	3110-198-1389	RING, BEARING, INNER: ROLLER ASSEMBLY M124 (92563)		EA	2	*	*	*	*	*	*	*	*	38	16
P O		RACE AND ROLLERS, OUTER BEARING: ROLLER ASSEMBLY M028 (92563)		EA	2	*	*	*	*	*	*	*	*	38	17
X20	2530-854-1530	RETAINER, BEARING: ROLLER ASSEMBLY 19242 (13841)		EA	2									38	18
P O		NUT, PLAIN, HEXAGON: WEARING SHOE MTG, 3/8-16 THD SIZE 1852 (13841)		EA	8	*	*	*	*	*	*	*	*	38	19
P O	5310-018-7712	WASHER, LOCK: WEARING SHOE MTG, 3/8 IN. 1887 (13841)		EA	8	*	*	*	*	*	*	*	*	38	20
P O		SCREW, CAP, HEXAGON HEAD: WEARING SHOE MTG, 3/8-16 X 2 IN. LG 1799 (13841)		EA	6	*	*	*	*	*	*	*	*	38	21
P O		SCREW, MACHINE: WEARING SHOE MTG, 3/8-16 X 2 IN. LG 25392 (13841)		EA	2	*	*	*	*	*	*	*	*	38	22
P O	2590-846-6948	SHOE, WEARING 19480 (13841)		EA	2	*	*	*	*	*	*	*	*	38	23
X20		BOOM, TELESCOPING 18818 (13841)		EA	1									38	24
X20		PLUG, PIPE: COUNTERSINK HEXAGON, 1/8 IN. NPT AN932-2 (88044)		EA	2									38	25
P O	5310-012-4589	NUT, PLAIN, HEXAGON: CYLINDER BRACKET MTG, 5/8-11 THD SIZE 1855 (13841)		EA	4	*	*	*	*	*	*	*	*	38	26
P O	5310-820-6653	WASHER, LOCK: CYLINDER BRACKET MTG, 5/8 IN. 1890 (13841)		EA	4	*	*	*	*	*	*	*	*	38	27
P O		SCREW, CAP, HEXAGON HEAD: CYLINDER BRACKET MTG, 5/8-11 X 2 3/4 IN. LG 1333 (13841)		EA	4	*	*	*	*	*	*	*	*	38	28
X20		BRACKET: CYLINDER MTG 18817 (13841)		EA	1									38	29

(1) SMR CODE	(2) FEDERAL STOCK NUMBER	(3) DESCRIPTION REF NUMBER & MFR CODE	USABLE ON CODE	(4) UNIT OF MEAS	(5) QTY INC IN UNIT	(6) 30-DAY DS MAINT ALLOWANCE (a) 1-20	(b) 21-50	(c) 51-100	(7) 30-DAY GS MAINT ALLOWANCE (a) 1-20	(b) 21-50	(c) 51-100	(8) 1-YR ALW PER 100 EQUIP CNTGY	(9) DEPOT MAINT ALW PER 100 EQUIP	(10) ILLUSTRATION (a) FIG. NO.	(b) ITEM NO.
P O		BUSHING, SLEEVE: HOIST AND ROD ANCHOR SHAFT 5165 (13841)		EA	2	*	*	*	*	*	*	*	*	38	30
P O	3110-732-0039	BUSHING, SLEEVE: BOOM PIVOT SHAFT 5284 (13841)		EA	2	*	*	*	*	*	*	*	*	38	31
X20		BOOM, MAIN 21798 (13841)		EA	1									38	32
P O	5310-176-8173	NUT, PLAIN, HEXAGON: HOIST MOTOR MTG, 5/8-11 THD SIZE		EA	2	*	*	*	*	*	*	*	*	39	1
P O	5310-820-6653	WASHER, LOCK: HOIST MOTOR MTG, 5/8 IN.		EA	2	*	*	*	*	*	*	*	*	39	2
P O	5305-724-5913	SCREW, CAP, HEXAGON HEAD: HOIST MOTOR MTG, 5/8-11 X 2 1/2 IN. LG		EA	2	*	*	*	*	*	*	*	*	39	3
P O R	2520-404-2706	MOTOR, HOIST: HYDRAULIC FLUID MMFB45UE10 (62983)		EA	1	*	*	*	*	*	*	*	*	39	
X2H		SCREW, CAP, HEXAGON HEAD: PLATE MOUNTING 1356 (62983)		EA	4									39	4
P H	5305-855-8006	SCREW, DRIVE: ROTATION PLATE MTG 120786 (62983)		EA	4				*	*	*	*	*	39	5
X2H		PLATE, ROTATION 266399 (62983)		EA	2									39	6
X2H		PIN, STRAIGHT, HEADLESS: PLATE 3913 (62983)		EA	2									39	7
P H		BEARING, ROLLER 257045 (62983)		EA	1				*	*	*	*	*	39	8
X2H		PLATE, VALVE 294364 (62983)		EA	1									39	9
X1		GASKET 241548 (62983)		EA	1									39	10
X2H		RING, RETAINING: BEARING 99907 (62983)		EA	1									39	11
X1		RING 126911 (62983)		EA	1									39	12
X1		WASHER 246017 (62983)		EA	1									39	13
X1		SPRING 282557 (62983)		EA	1									39	14
X1		WASHER 253665 (62983)		EA	1									39	15
X1		PIN, STRAIGHT, HEADLESS 248883 (62983)		EA	3									39	16
X1		BLOCK, CYLINDER 287632 (62983)		EA	1									39	17
X1		WASHER 253664 (62983)		EA	1									39	18
X1		WASHER 241541 (62983)		EA	1									39	19
X1		PLATE 266112 (62983)		EA	1									39	20
X1		PISTON 297178 (62983)		EA	9									39	21
X1		PLATE 241543 (62983)		EA	1									39	22

(1) SMR CODE	(2) FEDERAL STOCK NUMBER	(3) DESCRIPTION REF NUMBER & MFR CODE	USABLE ON CODE	(4) UNIT OF MEAS	(5) QTY INC IN UNIT	(6) 30-DAY DS MAINT ALLOWANCE (a) 1-20	(b) 21-50	(c) 51-100	(7) 30-DAY GS MAINT ALLOWANCE (a) 1-20	(b) 21-50	(c) 51-100	(8) 1-YR ALW PER 100 EQUIP CNTGY	(9) DEPOT MAINT ALW PER 100 EQUIP	(10) ILLUSTRATION (a) FIG. NO.	(b) ITEM NO.
X2H		RING, RETAINING 171545 (62983)		EA	1									39	23
X2H		RING, RETAINING 102835 (62983)		EA	1									39	24
P H	4320-633-0515	BEARING, HYDRAULIC MOTOR 241504 (62983)		EA	1				*	*	*	*	*	39	25
X2H		RING, RETAINING 177988 (62983)		EA	1									39	26
X2H		SLEEVE, MOTOR 257044 (62983)		EA	1									39	27
P H		SHAFT, SPECIAL 322355 (62983)		EA	1				*	*	*	*	*	39	28
X2H		WASHER, FLAT 273385 (62983)		EA	1									39	29
X2H		WASHER, SEAL RETAINING 294398 (62983)		EA	1									39	30
X1		SEAL 287458 (62983)		EA	1									39	31
X2H		PLUG, MOTOR 187087 (62983)		EA	1									39	32
X1		PACKING 154131 (62983)		EA	1									39	33
P H	5305-855-8006	SCREW, DRIVE: PLATE 120786 (62983)		EA	4				*	*	*	*	*	39	34
X2H		PLATE, INSTRUCTIONS 164432 (62983)		EA	1									39	35
X2H		HOUSING, MOTOR 266108 (62983)		EA	1									39	36
M O		WIRE ROPE, HOIST 20232 (13841) MANUFACTURE FROM:		EA	1									40	1
P O		CABLE, WIRE ROPE, 1/2 IN. DIA, 206 FT LG 20232 (27186)				*	*	*	*	*	*				
P O	5310-012-4595	NUT, PLAIN, HEXAGON: GEAR CASE MTG, 3/4-10 THD SIZE 1856 (13841)		EA	4	*	*	*	*	*	*	*	*	40	2
P O	5310-013-1046	WASHER, LOCK: GEAR CASE MTG, 3/4 IN. 1891 (13841)		EA	4	*	*	*	*	*	*	*	*	40	3
X2O		SCREW, CAP, HEXAGON HEAD: GEAR CASE MTG, 3/4-10 X 5 3/4 IN. LG 1346 (13841)		EA	4									40	4
P O R	3810-255-5044	GEAR CASE ASSEMBLY, HOIST 18782 (13841)		EA	1	*	*	*	*	*	*	*	*	40	
P F	5305-782-9494	SCREW, CAP, HEXAGON HEAD: FLANGED BEARING MTG, 1/2-13 X 1 3/4 IN. LONG 1813 (13841)		EA	6	*	*	*	*	*	*	*	*	40	5
P F	5310-042-6895	WASHER, LOCK: FLANGED BEARING MTG, 1/2 IN. 1889 (13841)		EA	6	*	*	*	*	*	*	*	*	40	6
P O	4730-050-4208	FITTING, LUBRICATION: SHAFT MS15003-1 (96906)		EA	2	*	*	*	*	*	*	*	*	40	7
P F	5305-225-3839	SCREW, CAP, HEXAGON HEAD: CAP MTG, 1/4-20 X 1 IN. LG 1778 (13841)		EA	8	*	*	*	*	*	*	*	*	40	8

(1) SMR CODE	(2) FEDERAL STOCK NUMBER	(3) DESCRIPTION REF NUMBER & MFR CODE	USABLE ON CODE	(4) UNIT OF MEAS	(5) QTY INC IN UNIT	(6) 30-DAY DS MAINT ALLOWANCE (a) 1-20	(b) 21-50	(c) 51-100	(7) 30-DAY GS MAINT ALLOWANCE (a) 1-20	(b) 21-50	(c) 51-100	(8) 1-YR ALW PER 100 EQUIP CNTGY	(9) DEPOT MAINT ALW PER 100 EQUIP	(10) ILLUSTRATION (a) FIG. NO.	(b) ITEM NO.
P F	5310-209-1869	WASHER, LOCK: CAP MTG, 1/4 IN. 1885 (13841)		EA	8	*	*	*	*	*	*	*	*	40	9
X2F		CAP, OPEN END 19504 (13841)		EA	2									40	10
M F		GASKET: CAP 19556 (13841) MANUFACTURE FROM:		EA	2									40	11
P F		PAPER, GASKET				*	*	*	*	*	*	*	*		
X2F	3810-756-0898	BEARING, FLANGED: DRUM 19587 (13841)		EA	1									40	12
P O	3815-756-1445	WEDGE, CABLE 20279 (13841)		EA	1	*	*	*	*	*	*	*	*	40	13
P F	3120-731-9320	BUSHING, SLEEVE: DRUM 5111 (13841)		EA	1	*	*	*	*	*	*	*	*	40	14
P2F		DRUM, HOIST 20242 (13841)		EA	1	*	*	*	*	*	*	*	*	40	15
P F		WASHER, THRUST: DRUM, 1 15/16 IN. ID, 3/4 IN. THK 3 1/2 IN. OD 18783 (13841)		EA	1	*	*	*	*	*	*	*	*	40	16
P F		KEY, MACHINE: DRUM 12120 (13841)		EA	2	*	*	*	*	*	*	*	*	40	17
P O	5340-731-9539	PLUG, DRAIN, MAGNETIC: CASE, 5/8 IN. 11255 (13841)		EA	2	*	*	*	*	*	*	*	*	40	18
P O	4730-834-6187	PLUG, PIPE: ADAPTER, 1/2-14 NPT		EA	1	*	*	*	*	*	*	*	*	40	19
P F		PLUG, PIPE: CAP, 1/8 IN. NPT 2005 (13841)		EA	1	*	*	*	*	*	*	*	*	40	20
P O		PLUG, PIPE: COVER, 3/4 IN. NPT 3677 (13841)		EA	1	*	*	*	*	*	*	*	*	40	21
P F		ELBOW, STREET: COVER, 3/4 IN. NPT 1998 (13841)		EA	1	*	*	*	*	*	*	*	*	40	22
P F	5305-269-3213	SCREW, CAP, HEXAGON HEAD: COVER AND ADAPTER MTG, 3/8-16 X 1 1/4 IN. LG 1796 (13841)		EA	10	*	*	*	*	*	*	*	*	40	23
P F	5310-018-7123	WASHER, LOCK: COVER AND ADAPTER MTG, 3/8 IN. 1887 (13841)		EA	10	*	*	*	*	*	*	*	*	40	24
X2F		COVER, CLOSED END 14278 (13841)		EA	1									40	25
P F	5330-728-8307	GASKET: COVER 24497 (13841)		EA	1	*	*	*	*	*	*	*	*	40	26
X2F		ADAPTER, MOTOR 18786 (13841)		EA	1									40	27
P F		GASKET: ADAPTER 18909 (13841)		EA	1	*	*	*	*	*	*	*	*	40	28
P F	5305-269-3213	SCREW, CAP, HEXAGON HEAD: COVER MTG, 3/8-16 X 1 1/4 IN. LG 1796 (13841)		EA	8	*	*	*	*	*	*	*	*	40	29
P F	5310-018-7123	WASHER, LOCK: COVER MTG, 3/8 IN. 1887 (13841)		EA	8	*	*	*	*	*	*	*	*	40	30
P F	2530-846-0855	BUSHING, SLEEVE: COVER 5099 (13841)		EA	1	*	*	*	*	*	*	*	*	40	31

(1) SMR CODE	(2) FEDERAL STOCK NUMBER	(3) DESCRIPTION REF NUMBER & MFR CODE	USABLE ON CODE	(4) UNIT OF MEAS	(5) QTY INC IN UNIT	(6) 30-DAY DS MAINT ALLOWANCE (a) 1-20	(b) 21-50	(c) 51-100	(7) 30-DAY GS MAINT ALLOWANCE (a) 1-20	(b) 21-50	(c) 51-100	(8) 1-YR ALW PER 100 EQUIP CNTGY	(9) DEPOT MAINT ALW PER 100 EQUIP	(10) ILLUSTRATION (a) FIG. NO.	(b) ITEM NO.
X2F		COVER, CASE 20180 (13841)		EA	1									40	32
P F	5330-808-9781	GASKET: COVER 21137 (13841)		EA	1	*	*	*	*	*	*	*	*	40	33
P F		SCREW, CAP, ~~HEXAGON~~ HEAD: GEAR MTG, 7/16 X 1 1/4 IN. LG 1350 (13841)		EA	6	*	*	*	*	*	*	*	*	40	34
P F	5310-018-7128	WASHER, LOCK: GEAR MTG, 7/16 IN. 1888 (13841)		EA	6	*	*	*	*	*	*	*	*	40	35
P F		GEAR, HELICAL: EXTERNAL TOOTH 20181 (13841)		EA	1	*	*	*	*	*	*	*	*	40	36
P F		SETSCREW: GEAR, 3/8-16 X 1 1/4 LG 1914 (13841)		EA	1	*	*	*	*	*	*	*	*	40	37
P F	5310-012-3221	NUT, PLAIN, HEXAGON: GEAR SETSCREW, 3/8-16 THD SIZE 1289 (13841)		EA	1	*	*	*	*	*	*	*	*	40	38
X2F		HUB, GEAR 20182 (13841)		EA	1									40	39
P F		KEY, MACHINE: GEAR HUB, 1/2 IN. SQUARE, 2 1/8 IN. LG 12119 (13841)		EA	1	*	*	*	*	*	*	*	*	40	40
X2F		SHAFT, STRAIGHT: MAIN GEAR 18784 (13841)		EA	1									40	41
X2F		SETSCREW: COUPLING 1964 (13841)		EA	1									40	42
X2F		COUPLING, RIGID 18785 (13841)		EA	1									40	43
X2F		KEY, MACHINE: COUPLING 12094 (13841)		EA	1									40	44
P F	5330-843-2720	SEAL, PLAIN, ENCASED: ADAPTER 13630 (80201)		EA	1	*	*	*	*	*	*	*	*	40	45
P F	3110-100-3692	CONE, TAPERED, ROLLER BEARING 02877 (60038)		EA	2	*	*	*	*	*	*	*	*	40	46
P F	3110-100-0634	CUP, TAPERED, ROLLER BEARING 02820 (60038)		EA	2	*	*	*	*	*	*	*	*	40	47
X2F		SPACER, BEARING 14282 (13841)		EA	1									40	48
X2F		SPACER, GEAR 14281 (13841)		EA	1									40	49
P F	2520-846-6857	GEAR, WORM 2878 (13841)		EA	1	*	*	*	*	*	*	*	*	40	50
P F		KEY, MACHINE: WORM GEAR, 3/8 IN. SQUARE, 3 1/2 IN. LG 12046 (13841)		EA	1	*	*	*	*	*	*	*	*	40	51
X2F		SHAFT, STRAIGHT, SHOULDRED: WORM GEAR 18788 (13841)		EA	1									40	52
P F	5330-843-2709	SEAL, PLAIN, ENCASED: GEAR CASE 19246 (80201)		EA	1	*	*	*	*	*	*	*	*	40	53
P F	3120-731-9320	BUSHING, SLEEVE: CASE 5111 (13841)		EA	1	*	*	*	*	*	*	*	*	40	54
X1		CASE, GEAR 18787 (13841)		EA	1									40	55
P O	5310-042-6895	NUT, PLAIN, HEXAGON: SWING MOTOR MTG, 1/2-13 THD SIZE 1854 (13841)		EA	2	*	*	*	*	*	*	*	*	41	1

(1) SMR CODE	(2) FEDERAL STOCK NUMBER	(3) DESCRIPTION REF NUMBER & MFR CODE	USABLE ON CODE	(4) UNIT OF MEAS	(5) QTY INC IN UNIT	(6) 30-DAY DS MAINT ALLOWANCE (a) 1-20	(b) 21-50	(c) 51-100	(7) 30-DAY GS MAINT ALLOWANCE (a) 1-20	(b) 21-50	(c) 51-100	(8) 1-YR ALW PER 100 EQUIP CNTGY	(9) DEPOT MAINT ALW PER 100 EQUIP	(10) ILLUSTRATION (a) FIG. NO.	(b) ITEM NO.
P O	5310-042-6895	WASHER, LOCK: SWING MOTOR MTG, 1/2 IN. 1889 (13841)		EA	2	*	*	*	*	*	*	*	*	41	2
P O	5305-071-2073	SCREW, CAP, HEXAGON HEAD: SWING MOTOR MTG, 1/2-13 X 2 1/2 IN. LG 1816 (13841)		EA	2	*	*	*	*	*	*	*	*	41	3
P O R	2520-457-1527	MOTOR ASSEMBLY, HYDRAULIC: BOOM SWING MMFB29-UG10 (62983)		EA	1	*	*	*	*	*	*	*	*	41	
P H	5305-734-7430	SCREW, CAP, HEXAGON HEAD: PLATE MTG 1316 (62983)		EA	4				*	*	*	*	*	41	4
P H	3110-969-4391	BEARING, SHAFT 251108 (62983)		EA	1				*	*	*	*	*	41	5
X2H		PIN, STRAIGHT, HEADLESS: VALVE PLATE DOWEL 3913 (62983)		EA	2									41	6
P H	5305-855-8006	SCREW, DRIVE: ROTATION PLATE 120786 (62983)		EA	2				*	*	*	*	*	41	7
X2H		PLATE, ROTATION 38448 (62983)		EA	1									41	8
X2H		SUBASSEMBLY: VALVE PLATE 941952 (62983)		EA	1									41	9
X1		GASKET MOTOR 238487 (62983) (PART OF SEAL KIT, FSN 4320-728-7474)		EA	1									41	10
X1		RING 194025 (62983) (PART OF ROTATING GROUP KIT, FSN 4320-728-7475)		EA	1									41	11
X1		WASHER 244931 (62983) (PART OF ROTATING GROUP KIT, FSN 4320-728-7475)		EA	1									41	12
X1		SPRING 246387 (62983) (PART OF ROTATING GROUP KIT, FSN 4320-728-7475)		EA	1									41	13
X1		WASHER 238780 (62983) (PART OF ROTATING GROUP KIT, FSN 3220-728-7475)		EA	1									41	14
X1		PIN 248835 (62983) (PART OF ROTATING GROUP KIT, FSN 4320-728-7475)		EA	3									41	15
X1		BLOCK 287454 (62983) (PART OF ROTATING GROUP KIT, FSN 4320-728-7475)		EA	1									41	16
X1		WASHER 238836 (62983) (PART OF ROTATING GROUP KIT, FSN 4320-728-7475)		EA	1									41	17
X1		WASHER 283993 (62983) (PART OF ROTATING GROUP KIT, FSN 4320-728-7475)		EA	1									41	18
X1		PLATE 248609 (62983) (PART OF ROTATING GROUP KIT, FSN 4320-728-7475)		EA	1									41	19

(1) SMR CODE	(2) FEDERAL STOCK NUMBER	(3) DESCRIPTION REF NUMBER & MFR CODE	USABLE ON CODE	(4) UNIT OF MEAS	(5) QTY INC IN UNIT	(6) 30-DAY DS MAINT ALLOWANCE (a) 1-20	(b) 21-50	(c) 51-100	(7) 30-DAY GS MAINT ALLOWANCE (a) 1-20	(b) 21-50	(c) 51-100	(8) 1-YR ALW PER 100 EQUIP CNTGY	(9) DEPOT MAINT ALW PER 100 EQUIP	(10) ILLUSTRATION (a) FIG. NO.
X1		PISTON 279097 (62983) (PART OF ROTATING GROUP KIT, FSN 4320-728-7475)		EA	9									41
X1		PLATE 239335 (62983) (PART OF ROTATING GROUP KIT, FSN 4320-728-7475)		EA	1									41
X2H		RING, RETAINING: SEAL 117506 (62983)		EA	1									41
X2H		RING, RETAINING: BEARING 117507 (62983)		EA	1									41
P H	3110-418-9557	BEARING, SHAFT 238482 (62983)		EA	1				*	*	*	*	*	41
P H	3040-422-1964	SHAFT, MOTOR 285408 (62983)		EA	1				*	*	*	*	*	41
X2H		WASHER, OIL SEAL 194878 (62983)		EA	1									41
X1		SEAL, PLAIN 238472 (62983) (PART OF SEAL KIT, FSN 4320-728-7474)		EA	1									41
X2F	4730-674-6831	PLUG, BODY 186580 (62983)		EA	1									41
X1		PACKING 154129 (62983) (PART OF SEAL KIT, FSN 4320-728-7474)		EA	1									41
P H	5305-855-8006	SCREW, DRIVE: INSTRUCTION PLATE 120786 (62983)		EA	2				*	*	*	*	*	41
X2H	1650-072-8998	PLATE, INSTRUCTIONS 164432 (62983)		EA	1									41
X1		HOUSING, MOTOR 252114 (62983)		EA	1									41
X20		SCREW, CAP, HEXAGON HEAD: SWING GEAR CASE MTG, 3/4-10 X 3 IN. LG 1838 (13841)		EA	4									42
P O	5310-013-1046	WASHER, LOCK: SWING GEAR CASE MTG, 3/4 IN. 1891 (13841)		EA	4	*	*	*	*	*	*	*	*	42
P O R	3810-255-5043	GEAR CASE ASSEMBLY 18820 (13841)		EA	1	*	*	*	*	*	*	*	*	42
P F		PLUG, PIPE: COVER, 1/8 IN. NPT 2005 (13841)		EA	2	*	*	*	*	*	*	*	*	42
P O	5340-731-9539	PLUG, DRAIN, MAGNETIC: 5/8 IN. 11255 (13841)		EA	1	*	*	*	*	*	*	*	*	42
P O		PLUG, PIPE: ADAPTER, 3/8 IN. NPT 11188 (13841)		EA	1	*	*	*	*	*	*	*	*	42
P F		PLUG, PIPE: CASE, 3/4 IN. NPT 3677 (13841)		EA	1	*	*	*	*	*	*	*	*	42
P O		PLUG, PIPE: CASE, 3/8 IN. NPT, VENTED 24499 (13841)		EA	1	*	*	*	*	*	*	*	*	42
P F	5305-269-3213	SCREW, CAP, HEXAGON HEAD: CAP AND ADAPTER MTG, 3/8-16 X 1 1/4 IN. LG 1791 (13841)		EA	8	*	*	*	*	*	*	*	*	42
P F	5310-018-7123	WASHER, LOCK: CAP AND ADAPTER MTG, 3/8 IN. 1887 (13841)		EA	8	*	*	*	*	*	*	*	*	42

(1) SMR CODE	(2) FEDERAL STOCK NUMBER	(3) DESCRIPTION REF NUMBER & MFR CODE	USABLE ON CODE	(4) UNIT OF MEAS	(5) QTY INC IN UNIT	(6) 30-DAY DS MAINT ALLOWANCE (a) 1-20	(b) 21-50	(c) 51-100	(7) 30-DAY GS MAINT ALLOWANCE (a) 1-20	(b) 21-50	(c) 51-100	(8) 1-YR ALW PER 100 EQUIP CNTGY	(9) DEPOT MAINT ALW PER 100 EQUIP	(10) ILLUSTRATION (a) FIG. NO.	(b) ITEM NO.
X2F		COVER, CLOSED END 14278 (13841)		EA	1									42	10
X2F		ADAPTER, MOTOR 18815 (13841)		EA	1									42	11
P F	5330-728-8307	GASKET: ADAPTER 24497 (13841)		EA	2	*	*	*	*	*	*	*	*	42	12
P F	5305-225-3839	SCREW, CAP, HEXAGON HEAD: CAP MTG, 1/4-20 X 1 IN. LG 1778 (13841)		EA	4	*	*	*	*	*	*	*	*	42	13
P F	5310-209-1869	WASHER, LOCK: CAP MTG, 1/4 IN. 1885 (13841)		EA	4	*	*	*	*	*	*	*	*	42	14
X2F		CAP, OPEN END 19504 (13841)		EA	1									42	15
M F		GASKET: CAP 19556 (13841) MANUFACTURE FROM:		EA	1									42	16
P F		PAPER, GASKET													
P F	5305-269-3213	SCREW, CAP, HEXAGON HEAD: COVER MTG, 3/8-16 X 1 1/4 IN. LG 1796 (13841)		EA	8	*	*	*	*	*	*	*	*	42	17
P F	5310-018-7123	WASHER, LOCK: COVER MTG, 3/8 IN. 1887 (13841)		EA	8	*	*	*	*	*	*	*	*	42	18
P F	2530-846-0855	BUSHING, SLEEVE: COVER 5099 (13841)		EA	1	*	*	*	*	*	*	*	*	42	19
X2F		COVER, GEAR CASE 20236 (13841)		EA	1									42	20
P F	5330-728-8306	GASKET: COVER 19509 (13841)		EA	1	*	*	*	*	*	*	*	*	42	21
P F		SCREW, CAP, HEXAGON HEAD: GEAR MTG, 7/16 X 1 1/4 IN. LG 1350 (13841)		EA	6	*	*	*	*	*	*	*	*	42	22
P F	5310-018-7128	WASHER, LOCK: GEAR MTG, 7/16 IN. 1888 (13841)		EA	6	*	*	*	*	*	*	*	*	42	23
P F	2530-848-1869	GEAR, HELICAL: EXTERNAL TOOTH 2876 (13841)		EA	1	*	*	*	*	*	*	*	*	42	24
P F		SETSCREW: HUB, 3/8-16 X 1 1/4 IN. LG 1914 (13841)		EA	2	*	*	*	*	*	*	*	*	42	25
P F	5310-012-3221	NUT, PLAIN, HEXAGON: HUB SETSCREW, 3/8-16 TWO SIZE 1289 (13841)		EA	2	*	*	*	*	*	*	*	*	42	26
X2F		HUB, GEAR 2877 (13841)		EA	1									42	27
P F		KEY, MACHINE: HUB, 1/2 IN. SQUARE, 2 1/8 IN. LG 12041 (13841)		EA	1	*	*	*	*	*	*	*	*	42	28
P F		GEAR, SPUR 18803 (13841)		EA	1	*	*	*	*	*	*	*	*	42	29
P F		WASHER, THRUST: SPUR GEAR 17132 (13841)		EA	1	*	*	*	*	*	*	*	*	42	30
X2F		RING, ADAPTER: GEAR 17134 (13841)		EA	1									42	31
P F		KEY, MACHINE: SPUR GEAR, 1/2 IN. SQUARE, 2 1/4 IN. LG 12116 (13841)		EA	1	*	*	*	*	*	*	*	*	42	32
X2F		SHAFT, STRAIGHT: MAIN GEAR 18819 (13841)		EA	1									42	33

(1) SMR CODE	(2) FEDERAL STOCK NUMBER	(3) DESCRIPTION REF NUMBER & MFR CODE	USABLE ON CODE	(4) UNIT OF MEAS	(5) QTY INC IN UNIT	(6) 30-DAY DS MAINT ALLOWANCE (a) 1-20	(b) 21-50	(c) 51-100	(7) 30-DAY GS MAINT ALLOWANCE (a) 1-20	(b) 21-50	(c) 51-100	(8) 1-YR ALW PER 100 EQUIP CNTGY	(9) DEPOT MAINT ALW PER 100 EQUIP	(10) ILLUSTRATION (a) FIG. NO.	(b) ITEM NO.
P F		SETSCREW: COUPLING 1964 (13841)		EA	1	*	*	*	*	*	*	*	*	42	34
X2F		COUPLING, RIGID: DRIVE 18816 (13841)		EA	1									42	35
X2F		KEY, MACHINE: COUPLING 12094 (13841)		EA	1									42	36
P F	5330-843-2720	SEAL, PLAIN, ENCASED: ADAPTER 13630 (80201)		EA	1	*	*	*	*	*	*	*	*	42	37
P F	3110-100-0634	CUP, TAPERED, ROLLER BEARING 02820 (60038)		EA	2	*	*	*	*	*	*	*	*	42	38
P F	3110-100 3692	CONE, TAPERED, ROLLER BEARING 02877 (60038)		EA	2	*	*	*	*	*	*	*	*	42	39
X2F		SPACER, BEARING 14281 (13841)		EA	1									42	40
X2F		SPACER, GEAR 14282 (13841)		EA	1									42	41
P F	2520-846-6857	GEAR, WORM 2878 (13841)		EA	1	*	*	*	*	*	*	*	*	42	42
P F		KEY, MACHINE: WORM GEAR 12056 (13841)		EA	1	*	*	*	*	*	*	*	*	42	43
X2F		SHAFT, STRAIGHT: DRIVE 20184 (13841)		EA	1									42	44
P F	5330-843-2709	SEAL, PLAIN, ENCASED: GEAR CASE 19246 (80201)		EA	1	*	*	*	*	*	*	*	*	42	45
P F	3120-731-9320	BUSHING, SLEEVE: CASE 5111 (13841)		EA	1	*	*	*	*	*	*	*	*	42	46
X2F		CASE, GEAR 20235 (13841)		EA	1									42	47
P O	5310-851-2674	NUT, PLAIN, HEXAGON: ROTARY SEAL COVER MTG, 1/4-20 THD SIZE MS35691-1 (96906)		EA	4	*	*	*	*	*	*	*	*	43	1
P O	5310-018-7241	WASHER, LOCK: ROTARY SEAL COVER MTG, 1/4 IN. 4312 (23382)		EA	4	*	*	*	*	*	*	*	*	43	2
P O		SCREW, CAP, HEXAGON HEAD: ROTARY SEAL COVER MTG, 1/4-20 X 1 IN. LONG 162306 (23382)		EA	4	*	*	*	*	*	*	*	*	43	3
X20		COVER, ROTARY SEAL		EA	1									43	4
P O		SETSCREW: SWIVEL LOCK, 1/4 X 5/16 IN. LG 1171 (13841)		EA	1	*	*	*	*	*	*	*	*	43	5
X20		LOCK, SWIVEL 20281 (13841)		EA	1									43	6
X20		SLEEVE, SPLIT 20283 (13841)		EA	1									43	7
P F	1730-842-9625	RING, ELECTRICAL CONTACT UC24-1500 (00503)		EA	1	*	*	*	*	*	*	*	*	43	8
X20		CONNECTOR, ELECTRICAL R59-4 (00503)		EA	2									43	9
P O	3895-552-1391	CONTACT, ELECTRICAL BRUSH R75-4 (00503)		EA	2	*	*	*	*	*	*	*	*	43	10
X2F		SCREW, SPRING TENSION RA9-4 (00503)		EA	2									43	11
X2F		SPRING, BRUSH R74 (00503)		EA	2									43	12

(1) SMR CODE	(2) FEDERAL STOCK NUMBER	(3) DESCRIPTION REF NUMBER & MFR CODE	USABLE ON CODE	(4) UNIT OF MEAS	(5) QTY INC IN UNIT	(6) 30-DAY OS MAINT ALLOWANCE (a) 1-20	(b) 21-50	(c) 51-100	(7) 30-DAY GS MAINT ALLOWANCE (a) 1-20	(b) 21-50	(c) 51-100	(8) 1-YR ALW PER 100 EQUIP CNTGY	(9) DEPOT MAINT ALW PER 100 EQUIP	(10) ILLUSTRATION (a) FIG. NO.	(b) ITEM NO.
X2F	2920-846-6996	HOLDER, BRUSH RA3-4 (00503)		EA	2									43	13
X2F	5977-546-2358	STUD, BRUSH RA4 (00503)		EA	1									43	14
X2F	6150-546-3642	SCREW ASSEMBLY: END PLATE R32-4 (00503)		EA	4									43	15
X2F	2590-846-6935	END PLATE RA7-4A (00503)		EA	1									43	16
X2F		INSULATOR RING RA7-4 (00503)		EA	1									43	17
X2F	2590-846-6991	RING, SLIP RA2-4 (00503)		EA	2									43	18
X2F	5977-736-5156	COLLAR, DRIVE RA1 (00503)		EA	1									43	19
X2F		BRACKET, LOCK 20282 (13841)		EA	1									43	20
P F		SETSCREW: ROTARY SEAL COLLAR, 3/8-16 X 2 IN. LG 1918 (13841)		EA	2	*	*	*	*	*	*	*	*	43	21
X2F	3810-756-0887	COLLAR, RETAINING: ROTARY SEAL 19020 (13841)		EA	1									43	22
P F		SCREW, CAP, HEXAGON HEAD: ROTARY SEAL MTG, 3/8-16 X 1 1/2 IN. LG 1797 (13841)		EA	3	*	*	*	*	*	*	*	*	43	23
P F	5310-018-7123	WASHER, LOCK: ROTARY SEAL MTG, 3/8 IN. 1887 (13841)		EA	3	*	*	*	*	*	*	*	*	43	24
P F S	3040-404-6943	ROTARY SEAL, JOINT 520880 (29783)		EA	1	*	*	*	*	*	*	*	*	43	25
P O	5305-068-0500	SCREW, CAP, HEXAGON HEAD: HARNESS MTG, 1/4-20 X 1/2 IN. LG		EA	3	*	*	*	*	*	*	*	*	44	1
P O	5310-018-7241	WASHER, LOCK: HARNESS MTG, 1/4 IN. 4312 (23382)		EA	3	*	*	*	*	*	*	*	*	44	2
X20		CLAMP, LOOP: HARNESS MTG		EA	3									44	3
X20		HARNESS, WIRE: SUPERSTRUCTURE 17126 (13841)		EA	1									44	4
P O		NUT, TUBE COUPLING: LUBRICATION LINE 11578 (13841)		EA	2	*	*	*	*	*	*	*	*	44	5
P O		TUBE, COPPER: LUBRICATION LINE 18847 (13841)		EA	1	*	*	*	*	*	*	*	*	44	6
P O		ELBOW, PIPE: LUBRICATION LINE 11580 (13841)		EA	1	*	*	*	*	*	*	*	*	44	7
P O		CONNECTOR, STRAIGHT: LUBRICATION LINE 11762 (13841)		EA	1	*	*	*	*	*	*	*	*	44	8
P O	5305-225-3839	SCREW, CAP, HEXAGON HEAD: BRACKET MTG, 1/4-20 X 1 IN. LG 1778 (13841)		EA	4	*	*	*	*	*	*	*	*	44	9
P O	5310-209-1869	WASHER, LOCK: BRACKET MTG, 1/4 IN. 1885 (13841)		EA	4	*	*	*	*	*	*	*	*	44	10
X20		BRACKET, HYDRAULIC LINES: 7 IN. LG 19003 (13841)		EA	1									44	11
X20		BRACKET, HYDRAULIC LINES: 5 1/4 IN. LG 19004 (13841)		EA	1									44	12

(1) SMR CODE	(2) FEDERAL STOCK NUMBER	(3) DESCRIPTION REF NUMBER & MFR CODE	USABLE ON CODE	(4) UNIT OF MEAS	(5) QTY INC IN UNIT	(6) 30-DAY D5 MAINT ALLOWANCE (a) 1-20	(b) 21-50	(c) 51-100	(7) 30-DAY GS MAINT ALLOWANCE (a) 1-20	(b) 21-50	(c) 51-100	(8) 1-YR ALW PER 100 EQUIP CNTGY	(9) DEPOT MAINT ALW PER 100 EQUIP	(10) ILLUSTRATION (a) FIG. NO.	(b) ITEM NO.
P O		BUSHING, SLEEVE: HOIST CYLINDER ANCHOR SHAFT 5165 (13841)		EA	2	*	*	*	*	*	*	*	*	44	13
P F		FITTING, LUBRICATION: CYLINDER SHAFT 1930 (95879)		EA	1	*	*	*	*	*	*	*	*	44	14
P O	4730-172-0034	FITTING, LUBRICATION: PLATE MS15003-6 (96906)		EA	1	*	*	*	*	*	*	*	*	44	15
P O	4720-050-4208	FITTING, LUBRICATION: GEAR HOUSING AND LOCK MS15003-1 (96906)		EA	2	*	*	*	*	*	*	*	*	44	16
P O		CHAIN, TWIST LINK TYPE 1, GRADE C, CLASS 5, STYLE 7 PER RC30-35, 3/16 X 30 IN. LG		FT	V	*	*	*	*	*	*	*	*	44	17
X20		LOCK PIN: TURRET		EA	1									44	18
X20		COLLAR, ANCHOR PIN 20270 (13841)		EA	2									44	19
P O	4730-014-3985	PLUG, PIPE: SHIPPER PLATE, 1 1/2 IN. NPT		EA	1	*	*	*	*	*	*	*	*	44	20
P O	5310-012-4595	NUT, PLAIN, HEXAGON: SUPERSTRUCTURE MTG, 3/4-10 THD SIZE 1856 (13841)		EA	16	*	*	*	*	*	*	*	*	44	21
X20		WASHER, BEVEL: SUPERSTRUCTURE MTG, 3/4 IN. 24391 (13841)		EA	8									44	22
P O	5310-013-1046	WASHER, LOCK: SUPERSTRUCTURE MTG, 3/4 IN. 1891 (13841)		EA	16	*	*	*	*	*	*	*	*	44	23
X20		SCREW, CAP, HEXAGON HEAD: SUPERSTRUCTURE MTG, 3/4-10 X 3 IN. LG 1177 (13841)		EA	8									44	24
X20		SCREW, CAP, HEXAGON HEAD: 3/4-10 X 3 1/2 IN. LG		EA	8									44	25
X2H		SCREW, CAP, HEXAGON HEAD: SHIPPER PLATE MTG, 3/4-10 X 3 1/4 IN. LG MS90725-192 (96906)		EA	6									44	26
X2H		SCREW, CAP, HEXAGON HEAD: SHIPPER PLATE MTG, 3/4-10 X 2 1/2 IN. LG 18848 (13841)		EA	10									44	27
P H	5310-013-1046	WASHER, LOCK: SHIPPER PLATE MTG, 3/4 IN. 1891 (13841)		EA	16	*	*	*	*	*	*	*	*	44	28
X2H		LOCK, ANTIROTATION		EA	1									44	29
X2H		SHIPPER PLATE ASSEMBLY 18911 (13841)		EA	1									44	30
X2H		BEARING RING 18790 (13841)		EA	1									44	31
X2H		PLATE, TOP 18917 (13841)		EA	1									44	32
X2H		SUBBASE 18902 (13841)		EA	1									44	33
X20		TERMINAL, BULLET: WORK LIGHT 3486 (04618)		EA	14									44	
X20		TERMINAL: NO. 10, WORK LIGHT B125 (83008)		EA	30									44	

(1) SMR CODE	(2) FEDERAL STOCK NUMBER	(3) DESCRIPTION REF NUMBER & MFR CODE	USABLE ON CODE	(4) UNIT OF MEAS	(5) QTY INC IN UNIT	(6) 30-DAY DS MAINT ALLOWANCE (a) 1-20	(b) 21-50	(c) 51-100	(7) 30-DAY GS MAINT ALLOWANCE (a) 1-20	(b) 21-50	(c) 51-100	(8) 1-YR ALW PER 100 EQUIP CNTGY	(9) DEPOT MAINT ALW PER 100 EQUIP	(10) ILLUSTRATION (a) FIG. NO.	(b) ITEM NO.
X20		WIRE, ELECTRICAL, STRANDED: WORK LIGHT 21799 (13841)		FT	75									44	
X20		CONNECTOR, FRICTION: BOOM LIGHTS 10-5323 (04700		EA	3									44	
X20	5940-944-5017	CONNECTOR, FRICTION: BOOM LIGHTS 36840 (04618)		EA	6									44	
		GROUP 09 - ENGINE INTAKE AND EXHAUST SYSTEMS													
P O	5340-152-0457	CLAMP, EXHAUST PIPE 105-75014 (23382)		EA	4	*	*	*	*	*	*	*	*	45	1
P O		ELBOW, EXHAUST OUTLET 334096 (23382)		EA	2	*	*	*	*	*	*	*	*	45	2
P O		CLAMP, MUFFLER 105-85014 (23382)		EA	4	*	*	*	*	*	*	*	*	45	3
P O		PIPE, EXHAUST 331284 (23382)		EA	2	*	*	*	*	*	*	*	*	45	4
P O		PIPE, FLEXIBLE, CONNECTOR 08680 (96142)		EA	2	*	*	*	*	*	*	*	*	45	5
P O		PIPE, OFFSET, CONNECTOR 331266 (23382)		EA	2	*	*	*	*	*	*	*	*	45	6
P O		CONNECTOR, MUFFLER 331267 (23382)		EA	2	*	*	*	*	*	*	*	*	45	7
P O		ELBOW, PIPE: EXHAUST 36666 (23382)		EA	2	*	*	*	*	*	*	*	*	45	8
P O		NUT, PLAIN, HEXAGON: SHIELD MTG, 1/4-20 THD SIZE 4700 (23382)		EA	8	*	*	*	*	*	*	*	*	45	9
P O	5310-018-7241	WASHER, LOCK: SHIELD MTG, 1/4 IN. 4312 (23382)		EA	8	*	*	*	*	*	*	*	*	45	10
P O	5305-068-0506	SCREW, CAP, HEXAGON HEAD: SHIELD MTG, 1/4-28 X 3/4 IN. LG		EA	8	*	*	*	*	*	*	*	*	45	11
P O		SHIELD, MUFFLER: RH 332011 (23382)		EA	1	*	*	*	*	*	*	*	*	45	12
P O		SHIELD, MUFFLER: LH 332012 (23382)		EA	1	*	*	*	*	*	*	*	*	45	12
P O		NUT, PLAIN, HEXAGON: MUFFLER MTG, 1/4-20 THD SIZE 4700 (23382)		EA	8	*	*	*	*	*	*	*	*	45	13
P O	5310-018-7241	WASHER, LOCK: MUFFLER MTG, 1/4 IN. 4312 (23382)		EA	8	*	*	*	*	*	*	*	*	45	14
P O		BOLT, U: MUFFLER MTG, 331424 (23382)		EA	4	*	*	*	*	*	*	*	*	45	15
P O		MUFFLER ASSEMBLY, EXHAUST MZM08-5023 (18265)		EA	2	*	*	*	*	*	*	*	*	45	16
P O		NUT, PLAIN, HEXAGON: BRACKET MTG, 1/4-20 THD SIZE 4700 (23382)		EA	8	*	*	*	*	*	*	*	*	45	17
P O	5310-209-1869	WASHER, LOCK: BRACKET MTG, 1/4 IN. 14347 (41226)		EA	8	*	*	*	*	*	*	*	*	45	18
P O	5305-068-0506	SCREEN, CAP, HEXAGON HEAD: BRACKET MTG, 1/4-28 X 3/4 IN. LG		EA	8	*	*	*	*	*	*	*	*	45	19
X20		BRACKET, MUFFLER 331422 (23382)		EA	4									45	20
P O	4730-274-7406	CLAMP, HOSE 7951827 (19207)		EA	4	*	*	*	*	*	*	*	*	46	1

(1) SMR CODE	(2) FEDERAL STOCK NUMBER	(3) DESCRIPTION REF NUMBER & MFR CODE	USABLE ON CODE	(4) UNIT OF MEAS	(5) QTY INC IN UNIT	(6) 30-DAY OS MAINT ALLOWANCE (a) 1-20	(b) 21-50	(c) 51-100	(7) 30-DAY GS MAINT ALLOWANCE (a) 1-20	(b) 21-50	(c) 51-100	(8) 1-YR ALW PER 100 EQUIP CNTGY	(9) DEPOT MAINT ALW PER 100 EQUIP	(10) ILLUSTRATION (a) FIG. NO.	(b) ITEM NO.
P 0	2940-229-5538	HOSE, PUMP ADAPTER P10-1294 (18265)		EA	1	*	*	*	*	*	*	*	*	46	2
P 0	2940-941-1584	HOSE, PREFORMED: ADAPTER P10-5611 (18265)		EA	1	*	*	*	*	*	*	*	*	46	3
P 0		CLAMP, HOSE: GOVERNOR BY-PASS HOSE		EA	2	*	*	*	*	*	*	*	*	46	4
P 0		HOSE, RUBBER: GOVERNOR BY-PASS LINE		EA	1	*	*	*	*	*	*	*	*	46	5
X20		TUBE, AIR CLEANER 331426 (23382)		EA	1									46	6
P 0	5305-269-3210	SCREW, CAP, HEXAGON HEAD: AIR MANIFOLD MTG, 3/8-16 X 7/8 IN. LG		EA	8	*	*	*	*	*	*	*	*	46	7
P 0	5310-680-7297	WASHER, LOCK: AIR MANIFOLD MTG, 3/8 IN.		EA	8	*	*	*	*	*	*	*	*	46	8
P 0		MANIFOLD, AIR INTAKE 331427 (23382)		EA	1	*	*	*	*	*	*	*	*	46	9
P 0	5310-021-8582	NUT, PLAIN, HEXAGON: AIR CLEANER MTG, 3/8-24 THD SIZE		EA	4	*	*	*	*	*	*	*	*	47	1
P 0	5310-209-0965	WASHER, LOCK: AIR CLEANER MTG, 3/8 IN. MS35338-47 (96906)		EA	4	*	*	*	*	*	*	*	*	47	2
P 0		SCREW, CAP, HEXAGON HEAD: AIR CLEANER MTG, 3/8-24 X 1 1/4 IN. LG 165285 (23382)		EA	4	*	*	*	*	*	*	*	*	47	3
P 0		BAND ASSEMBLY: AIR CLEANER MTG AAH00-0350 (18265)		EA	2	*	*	*	*	*	*	*	*	47	4
P 0	5310-010-5605	NUT, PLAIN, SQUARE: CLEANER BAND, 5/16-18 THD SIZE		EA	2	*	*	*	*	*	*	*	*	47	5
P 0	5306-292-8850	BOLT, MACHINE, SQUARE HEAD: CLEANER BAND, 5/16-18 X 1 1/2 IN. LG		EA	2	*	*	*	*	*	*	*	*	47	6
P20		CLEANER ASSEMBLY, AIR SBG14-0041 (18265)		EA	1	*	*	*	*	*	*	*	*	47	
X20		COVER ASSEMBLY, OUTER P16970 (18265)		EA	1									47	7
P 0	2940-972-5393	GASKET: COVER P16972 (18265)		EA	1	*	*	*	*	*	*	*	*	47	8
P 0	5305-961-6507	THUMB SCREW: INNER COVER P18464 (18265)		EA	1	*	*	*	*	*	*	*	*	47	
P 0	2940-857-0555	GASKET: COVER BOLT P18462 (18265)		EA	1	*	*	*	*	*	*	*	*	47	10
X20		COVER ASSEMBLY, INNER P10-1670 (18265)		EA	1									47	11
P 0	2940-857-0558	GASKET: COVER SCREW P10-1667 (18265)		EA	1	*	*	*	*	*	*	*	*	47	12
P 0	2940-878-0133	ELEMENT ASSEMBLY P10-1760 (18265)		EA	1	*	*	*	*	*	*	*	*	47	13
P 0	2940-972-8236	GASKET: COVER SEAL, UPPER P10-0859 (18265)		EA	1	*	*	*	*	*	*	*	*	47	14
P 0	2940-972-8234	GASKET: ELEMENT SEAL, LOWER P18029 (18265)		EA	1	*	*	*	*	*	*	*	*	47	15
P 0	5340-199-8041	CLAMP ASSEMBLY: BODY P10-0861 (18265)		EA	1	*	*	*	*	*	*	*	*	47	16
X1		NUT, PLAIN, SQUARE: BODY CLAMP P18730 (18265)		EA	1									47	17
X1		SCREW, MACHINE: BODY CLAMP P10-0784 (18265)		EA	1									47	18
X1		BODY ASSEMBLY, ELEMENT P10-2255 (18265)		EA	1									47	19

(1) SMR CODE	(2) FEDERAL STOCK NUMBER	(3) DESCRIPTION REF NUMBER & MFR CODE	USABLE ON CODE	(4) UNIT OF MEAS	(5) QTY INC IN UNIT	(6) 30-DAY DS MAINT ALLOWANCE (a) 1-20	(b) 21-50	(c) 51-100	(7) 30-DAY GS MAINT ALLOWANCE (a) 1-20	(b) 21-50	(c) 51-100	(8) 1-YR ALW PER 100 EQUIP CNTGY	(9) DEPOT MAINT ALW PER 100 EQUIP	(10) ILLUSTRATION (a) FIG. NO.	(b) ITEM NO.
P O	5330-972-5392	PACKING, PREFORMED: CLAMP SEAL P17335 (18265)		EA	1	*	*	*	*	*	*	*	*	47	20
X20		SHROUD ASSEMBLY P10-2870 (18265)		EA	1									47	21
X1		NUT, PLAIN, SQUARE P5301 (18265)		EA	2									47	22
X1		SCREW, MACHINE P5308 (18265)		EA	4									47	23
X1		SHIELD ASSEMBLY P10-6870 (18265)		EA	1									47	24
P O	5340-832-8574	CLAMP, RIM CLENCHING: BOWL MTG P10-0866 (18265)		EA	1	*	*	*	*	*	*	*	*	47	25
X1		NUT, PLAIN, SQUARE: BOWL CLAMP P10-0791 (18265)		EA	1									47	26
X1		BOLT, CLAMP P10-0793 (18265)		EA	1									47	27
X1		WASHER, SPECIAL: BOWL CLAMP P18575 (18265)		EA	1									47	28
X1		CUP ASSEMBLY P11-0282 (18265)		EA	1									47	29
P O		PACKING, PREFORMED: CLAMP SEAL P17335 (18265)		EA	1	*	*	*	*	*	*	*	*	47	30
X20		BODY ASSEMBLY: PRIMARY P10-2256 (18265)		EA	1									47	31
P O		TUBE ASSEMBLY: INDICATOR LINE		EA	1	*	*	*	*	*	*	*	*	47	32
P O		ELBOW, PIPE TO TUBE: INDICATOR LINE		EA	2	*	*	*	*	*	*	*	*	47	33
P O		COUPLING, PIPE: INDICATOR LINE		EA	2	*	*	*	*	*	*	*	*	47	34
P O	2940-225-4833	INDICATOR KIT, RESTRICTION: AIR CLEANER RAX00-2325 (18265)		EA	1	*	*	*	*	*	*	*	*	47	35
P O	2910-646-9727	CYLINDER, ETHER LP535 (61112)		EA	1	*	*	*	*	*	*	*	*	48	1
P O	5310-014-2247	NUT, PLAIN, HEXAGON: START KIT MTG, 1/4-28 THD SIZE 4200 (23382)		EA	4	*	*	*	*	*	*	*	*	48	2
P O	5310-018-7241	WASHER, LOCK: START KIT MTG, 1/4 IN. 4312 (23382)		EA	4	*	*	*	*	*	*	*	*	48	3
P O	5305-068-0506	SCREW, CAP, HEXAGON HEAD: START KIT MTG, 1/4-28 X 3/4 IN. LG		EA	4	*	*	*	*	*	*	*	*	46	4
P O		START KIT, ETHER 199857 (23382)		EA	1	*	*	*	*	*	*	*	*	48	
P O		CLAMP, CYLINDER LP2299-1 (61112)		EA	1	*	*	*	*	*	*	*	*	48	5
P O	4710-462-0333	TUBE, NYLON: ETHER START LP3239-48 (61112)		EA	1	*	*	*	*	*	*	*	*	48	6
P O		ATOMIZER, STARTING FLUID LP2215-10 (61112)		EA	1	*	*	*	*	*	*	*	*	48	7
X20		FITTING, ATOMIZER LP482 (61112)		EA	1									48	8
P O		SWITCH, PUSH: ETHER START LP1779-1 (61112)		EA	1	*	*	*	*	*	*	*	*	48	9
P O		VALVE ASSEMBLY, SOLENOID LP3483-9 (61112)		EA	1	*	*	*	*	*	*	*	*	48	10

(1) SMR CODE	(2) FEDERAL STOCK NUMBER	(3) DESCRIPTION REF NUMBER & MFR CODE	USABLE ON CODE	(4) UNIT OF MEAS	(5) QTY INC IN UNIT	(6) 30-DAY DS MAINT ALLOWANCE (a) 1-20	(b) 21-50	(c) 51-100	(7) 30-DAY GS MAINT ALLOWANCE (a) 1-20	(b) 21-50	(c) 51-100	(8) 1-YR ALW PER 100 EQUIP CNTGY	(9) DEPOT MAINT ALW PER 100 EQUIP	(10) ILLUSTRATION (a) FIG. NO.	(b) ITEM NO.
		GROUP 10 - ENGINE COWLING AND RADIATOR													
P O	5310-014-2247	NUT, PLAIN, HEXAGON: HINGE MTG, 1/4-28 THD SIZE 4200 (23382)		EA	16	*	*	*	*	*	*	*	*	49	1
P O	5310-018-7241	WASHER, LOCK: HINGE MTG, 1/4 IN. 4312 (23382)		EA	16	*	*	*	*	*	*	*	*	49	2
P O	5306-281-9545	BOLT, MACHINE: HINGE MTG, 1/4-28 X 5/8 IN. LG AN107408 (88044)		EA	16	*	*	*	*	*	*	*	*	49	3
X20		STIFFENER, HOOD 331299 (23382)		EA	2									49	4
X20		HINGE 330707 (23382)		EA	1									49	5
X20		LATCH ASSEMBLY: HOOD LATCHING 7969299 (00000)		EA	8									49	6
P O	5310-014-2247	NUT, PLAIN, HEXAGON: LATCH MTG, 1/4-28 THD SIZE 4200 (23382)		EA	16	*	*	*	*	*	*	*	*	49	7
P O	5310-018-7241	WASHER, LOCK: LATCH MTG, 1/4 IN. 4312 (23382)		EA	16	*	*	*	*	*	*	*	*	49	8
P O	5305-068-0506	SCREW, CAP, HEXAGON HEAD: LATCH MTG, 1/4-28 X 3/4 IN. LG		EA	16	*	*	*	*	*	*	*	*	49	9
X20		PANEL, HOOD, TOP 330702 (23382)		EA	2									49	10
P O	5310-975-2075	NUT, PLAIN, HEXAGON: SIDE PANEL MTG, 3/8-24 THD SIZE MS35691-21 (96906)		EA	8	*	*	*	*	*	*	*	*	49	11
P O	5310-018-7123	WASHER, LOCK: SIDE PANEL MTG, 3/8 IN. 4313 (23382)		EA	8	*	*	*	*	*	*	*	*	49	12
P O	5305-680-7331	SCREW, CAP, HEXAGON HEAD: SIDE PANEL MTG, 3/8-24 X 7/8 IN. LG 165291 (23382)		EA	8	*	*	*	*	*	*	*	*	49	13
X20		PANEL, SIDE: LH 330705 (23382)		EA	1									49	14
X20		PANEL, SIDE: RH 330704 (23382)		EA	1									49	15
P O	5310-014-2247	NUT, PLAIN, HEXAGON: BOTTOM PANEL MTG, 1/4-28 THD SIZE 4200 (23382)		EA	6	*	*	*	*	*	*	*	*	49	16
P O	5310-018-7241	WASHER, LOCK: BOTTOM PANEL MTG, 1/4 IN. 4312 (23382)		EA	6	*	*	*	*	*	*	*	*	49	17
P O	5305-068-0506	SCREW, CAP, HEXAGON HEAD: BOTTOM PANEL MTG, 1/4-28 X 3/4 IN. LG		EA	6	*	*	*	*	*	*	*	*	49	18
P O	5310-014-2247	NUT, PLAIN, HEXAGON: BOTTOM PANEL MTG, 1/4-28 THD SIZE 4200 (23382)		EA	6	*	*	*	*	*	*	*	*	49	19
P O	5310-018-7241	WASHER, LOCK: BOTTOM PANEL MTG, 1/4 IN. 4312 (23382)		EA	6	*	*	*	*	*	*	*	*	49	20
P O		SCREW, CAP, HEXAGON HEAD: BOTTOM PANEL MTG, 1/4-28 X 1 IN. LG 30417 (23382)		EA	6	*	*	*	*	*	*	*	*	49	21
X20		COVER, SIDE PANEL, BOTTOM: LH 333601 (23382)		EA	1									49	22

(1) SMR CODE	(2) FEDERAL STOCK NUMBER	(3) DESCRIPTION REF NUMBER & MFR CODE	USABLE ON CODE	(4) UNIT OF MEAS	(5) QTY INC IN UNIT	(6) 30-DAY DS MAINT ALLOWANCE (a) 1-20	(b) 21-50	(c) 51-100	(7) 30-DAY GS MAINT ALLOWANCE (a) 1-20	(b) 21-50	(c) 51-100	(8) 1-YR ALW PER 100 EQUIP CNTGY	(9) DEPOT MAINT ALW PER 100 EQUIP	(10) ILLUSTRATION (a) FIG. NO.	(b) ITEM NO.
P O		FASTENER, STUD TYPE 190500 (23382)		EA	8	*	*	*	*	*	*	*	*	49	23
P O		RECEPTACLE, SCREW TYPE: STUD FASTENER 190501 (23382)		EA	16	*	*	*	*	*	*	*	*	49	24
P O		NUT, RETAINING: RECEPTACLE 190502 (23382)		EA	16	*	*	*	*	*	*	*	*	49	25
X20		PANEL, SIDE, BOTTOM: L H HOOD 331316 (23382)		EA	1									49	26
X20		COVER, SIDE PANEL, BOTTOM: R H 333600 (23382)		EA	1									49	27
P O		FASTENER, STUD TYPE 190500 (23382)		EA	8	*	*	*	*	*	*	*	*	49	28
X20		PANEL, SIDE, BOTTOM: R H, HOOD 331315 (23382)		EA	1									49	29
P O	5310-851-2674	NUT, PLAIN, HEXAGON: PANEL MTG, 1/4-20 THD SIZE MS35691-1 (96906)		EA	6	*	*	*	*	*	*	*	*	49	30
P O	5310-018-7241	WASHER, LOCK: PANEL MTG, 1/4 IN. 4312 (23382)		EA	6	*	*	*	*	*	*	*	*	49	31
P O		WASHER, FLAT: PANEL MTG, 1/4 IN. 4400 (23382)		EA	6	*	*	*	*	*	*	*	*	49	32
P O		SCREW, CAP, HEXAGON HEAD: PANEL MTG, 1/4-20 X 1 IN. LG 4653 (23382)		EA	6	*	*	*	*	*	*	*	*	49	33
P O		NUT, PLAIN, HEXAGON: PUMP COVER MTG, NO. 10-32 THD SIZE 6961 (23382)		EA	5	*	*	*	*	*	*	*	*	49	34
P O		WASHER, LOCK: PUMP COVER MTG, NO. 10 164604 (23382)		EA	5	*	*	*	*	*	*	*	*	49	35
P O	5305-680-5832	SCREW, MACHINE: PUMP COVER MTG, NO. 10-32 X 1/2 IN. LG 162134 (23382)		EA	5	*	*	*	*	*	*	*	*	49	36
P O	5310-014-2247	NUT, PLAIN, HEXAGON: FASTENER AND BRACKET MTG, 1/4-28 THD SIZE 4200 (23382)		EA	8	*	*	*	*	*	*	*	*	49	37
P O	5310-209-1869	WASHER, LOCK: FASTENER AND BRACKET MTG, 1/4 IN. 4347 (41226)		EA	8	*	*	*	*	*	*	*	*	49	38
P O	5305-267-8953	SCREW, MACHINE: FASTENER AND BRACKET MTG, 1/4-28 X 5/8 IN. LG 4194 (23382)		EA	8	*	*	*	*	*	*	*	*	49	39
P O		FASTENER, BARREL TYPE: PUMP COVER 750009 (57733)		EA	2	*	*	*	*	*	*	*	*	49	40
P O		BRACKET, HOOD: PUMP COVER 750506 (57733)		EA	2	*	*	*	*	*	*	*	*	49	41
X20		COVER, REAR: HYDRAULIC PUMP 331283 (23382)		EA	1									49	42
X20		PANEL ASSEMBLY: HOOD FRONT 330699 (23382)		EA	1									49	43
P O	5310-975-2075	NUT, PLAIN, HEXAGON: BRACKET MTG, 3/8-24 THD SIZE MS35691-21 (96906)		EA	3	*	*	*	*	*	*	*	*	49	44
P O	5310-018-7123	WASHER, LOCK: BRACKET MTG, 3/8 IN. 4313 (23382)		EA	3	*	*	*	*	*	*	*	*	49	45

(1) SMR CODE	(2) FEDERAL STOCK NUMBER	(3) DESCRIPTION REF NUMBER & MFR CODE	USABLE ON CDOE	(4) UNIT OF MEAS	(5) QTY INC IN UNIT	(6) 30-DAY DS MAINT ALLOWANCE (a) 1-20	(b) 21-50	(c) 51-100	(7) 30-DAY GS MAINT ALLOWANCE (a) 1-20	(b) 21-50	(c) 51-100	(8) 1-YR ALW PER 100 EQUIP CNTGY	(9) DEPOT MAINT ALW PER 100 EQUIP	(10) ILLUSTRATION (a) FIG. NO.	(b) ITEM NO.
P O	5305-269-2805	SCREW, CAP, HEXAGON HEAD: BRACKET MTG, 3/8-16 X 1 1/4 IN. LG MS90726-62 (96906)		EA	3	*	*	*	*	*	*	*	*	49	46
P O	5310-014-2247	NUT, PLAIN, HEXAGON: REAR PANEL MTG, 1/4-28 THD SIZE 4200 (23382)		EA	4	*	*	*	*	*	*	*	*	49	47
P O	5310-018-7241	WASHER, LOCK: REAR PANEL MTG, 1/4 IN. MS35339-44 (23382)		EA	4	*	*	*	*	*	*	*	*	49	48
P O		WASHER, FLAT: REAR PANEL MTG, 1/4 IN. 6487 (23382)		EA	4	*	*	*	*	*	*	*	*	49	49
P O	5305-267-8953	SCREW, CAP, HEXAGON HEAD: REAR PANEL MTG, 1/4-28 X 1 IN. LG 4194 (23382)		EA	4	*	*	*	*	*	*	*	*	49	50
X20		BRACKET: AIR CLEANER AND MUFFLER 331421 (23382)		EA	1									49	51
X20		PANEL ASSEMBLY: HOOD, REAR 330700 (23382)		EA	1									49	52
P O	5310-014-2247	NUT, PLAIN, HEXAGON: EVAPORATOR MTG, 1/4-28 THD SIZE 4200 (23382)		EA	3	*	*	*	*	*	*	*	*	50	1
P O	5310-018-7241	WASHER, LOCK: EVAPORATOR MTG, 1/4 IN. 4312 (23382)		EA	3	*	*	*	*	*	*	*	*	50	2
P O	5305-068-0506	SCREW, CAP, HEXAGON HEAD: EVAPORATOR MTG, 1/4-28 X 3/4 IN. LG		EA	3	*	*	*	*	*	*	*	*	50	3
P O	2530-859-7335	EVAPORATOR, ALCOHOL MS53067 (96906)		EA	1	*	*	*	*	*	*	*	*	50	
P O	2530-755-7198	JAR, EVAPORATOR 238956 (06853)		EA	1	*	*	*	*	*	*	*	*	50	4
P O	2530-755-7191	GASKET: EVAPORATOR 243940 (06853)		EA	1	*	*	*	*	*	*	*	*	50	5
X20	5330-890-8152	TUBE, EVAPORATOR 243937 (06853)		EA	1									50	6
P O	5330-890-8152	SEAL RING: TUBE 239071 (06853)		EA	1	*	*	*	*	*	*	*	*	50	7
X20		PLUG, EVAPORATOR 243939 (06853)		EA	1									50	8
P O	2530-856-3542	FILTER, EVAPORATOR 239139 (06853)		EA	1	*	*	*	*	*	*	*	*	50	9
X1		BODY 242141 (06853)		EA	1									50	10
P O	4730-908-3194	CLAMP, HOSE: WATER FILTER MS35842-11 (96906)		EA	4	*	*	*	*	*	*	*	*	51	1
P O	4720-200-0361	HOSE, RUBBER: WATER FILTER, 5 FT REQUIRED ZZH601 (81348)		FT	V	*	*	*	*	*	*	*	*	51	2
P O		FITTING, SHUT-OFF 85830 (23382)		EA	2	*	*	*	*	*	*	*	*	51	3
P O	5305-269-3209	SCREW, CAP, HEXAGON HEAD: FILTER MTG, 3/8-16 X 3/4 IN. LG MS90725-58 (96906)		EA	4	*	*	*	*	*	*	*	*	51	4
P O	5310-018-7123	WASHER, LOCK: FILTER MTG, 3/8 IN. 4313 (23382)		EA	4	*	*	*	*	*	*	*	*	51	5
P O		FILTER ASSEMBLY, WATER 310100 (17929)		EA	1	*	*	*	*	*	*	*	*	51	6

(1) SMR CODE	(2) FEDERAL STOCK NUMBER	(3) DESCRIPTION REF NUMBER & MFR CODE	USABLE ON CODE	(4) UNIT OF MEAS	(5) QTY INC IN UNIT	(6) 30-DAY OS MAINT ALLOWANCE (a) 1-20	(b) 21-50	(c) 51-100	(7) 30-DAY GS MAINT ALLOWANCE (a) 1-20	(b) 21-50	(c) 51-100	(8) 1-YR ALW PER 100 EQUIP CNTGY	(9) DEPOT MAINT ALW PER 100 EQUIP	(10) ILLUSTRATION (a) FIG. NO.	(b) ITEM NO.
X20		CLAMP 310118 (17929)		EA	1									51	7
P O		ELEMENT, FILTER 310500 (17929)		EA	1	*	*	*	*	*	*	*	*	51	8
P O		SPRING, COMPRESSION 310109 (17929)		EA	1	*	*	*	*	*	*	*	*	51	9
X1		BOWL 301101 (17929)		EA	1									51	10
P O		GROMMET, RUBBER 310103 (17929)		EA	1	*	*	*	*	*	*	*	*	51	11
P O		GASKET: COVER 310517 (17929)		EA	1	*	*	*	*	*	*	*	*	51	12
X20		COVER 310102 (17929)		EA	1									51	13
P O	4730-690-3830	CLAMP, HOSE: UPPER 192857 (23382)		EA	8	*	*	*	*	*	*	*	*	52	1
M O		HOSE, RUBBER: RADIATOR, TOP MANUFACTURE FROM:		EA	2									52	
P O		HOSE, RUBBER, 14 IN. REQUIRED FOR EACH HOSE 64601 (23382)				*	*	*	*	*	*			52	2
P O		HOSE, RUBBER, 9 IN. REQUIRED FOR EACH HOSE 64601 (23382)				*	*	*	*	*	*			52	3
X20		ELBOW, WATER: RADIATOR, TOP NT162 (97053)		EA	2									52	4
P O	4730-909-8627	CLAMP, HOSE: LOWER MS35842-13 (96906)		EA	4	*	*	*	*	*	*	*	*	52	5
M O		HOSE, RADIATOR: LOWER MANUFACTURE FROM:		EA	1										
P O	2930-725-4061	HOSE, RUBBER, 9 IN. REQUIRED 64574 (23382)				*	*	*	*	*	*			52	6
P O	2930-725-4061	HOSE, RUBBER, 6 IN. REQUIRED 64574 (23382)				*	*	*	*	*	*			52	7
P O	4820-130-4840	COCK, DRAIN: RADIATOR AC2265 (63477)		EA	1	*	*	*	*	*	*	*	*	52	8
P O	4730-278-4116	NIPPLE, PIPE: RADIATOR DRAIN		FT	1	*	*	*	*	*	*	*	*	52	9
P O	4730-196-1554	NIPPLE, PIPE: RADIATOR DRAIN WWN351 (81348)		FT	1	*	*	*	*	*	*	*	*	52	10
P O	4730-722-2759	ELBOW, PIPE: RADIATOR DRAIN WWP521 (81348)		EA	2	*	*	*	*	*	*	*	*	52	11
X20		TUBE, WATER: LOWER 64480 (23382)		EA	1									52	12
P O	5310-851-2674	NUT, PLAIN, HEXAGON: FAN GUARD, 1/4-20 THD SIZE MS35691-1 (96906)		EA	4	*	*	*	*	*	*	*	*	52	13
P O	5310-018-7241	WASHER, LOCK: FAN GUARD, 1/4 IN. 4312 (23382)		EA	4	*	*	*	*	*	*	*	*	52	14
P O	5305-068-0502	SCREW, CAP, HEXAGON HEAD: FAN GUARD, 1/4-20 X 3/4 IN. LG		EA	4	*	*	*	*	*	*	*	*	52	15
P O		SCREW, TAPPING, THREAD CUTTING: GUARD AND SHROUD MTG, NO. 10-32 X 3/8 IN. LG 160521 (23382)		EA	10	*	*	*	*	*	*	*	*	52	16

(1) SMR CODE	(2) FEDERAL STOCK NUMBER	(3) DESCRIPTION REF NUMBER & MFR CODE	USABLE ON CODE	(4) UNIT OF MEAS	(5) QTY INC IN UNIT	(6) 30-DAY DS MAINT ALLOWANCE (a) 1-20	(b) 21-50	(c) 51-100	(7) 30-DAY GS MAINT ALLOWANCE (a) 1-20	(b) 21-50	(c) 51-100	(8) 1-YR ALW PER 100 EQUIP CNTGY	(9) DEPOT MAINT ALW PER 100 EQUIP	(10) ILLUSTRATION (a) FIG. NO.	(b) ITEM NO.
P O		WASHER, LOCK: GUARD AND SHROUD MTG, NO. 10 164604 (23382)		EA	10	*	*	*	*	*	*	*	*	52	17
P O		GUARD, FAN 330697 (23382)		EA	2	*	*	*	*	*	*	*	*	52	18
P O		NUT, PLAIN, HEXAGON: SHROUD, NO. 10-32 THO SIZE 6961 (23382)		EA	2	*	*	*	*	*	*	*	*	52	19
P O		SCREW, MACHINE: SHROUD, NO. 10-32 X 3/4 IN. LG 162136 (23382)		EA	2	*	*	*	*	*	*	*	*	52	20
X20		SHROUD, RADIATOR 158610 (23382)		EA	1									52	21
P O	5310-732-0559	NUT, PLAIN, HEXAGON: RADIATOR AND BRACKET MTG, 3/8-24 THO SIZE MS51908-8 (96906)		EA	8	*	*	*	*	*	*	*	*	52	22
P O	5310-018-7123	WASHER, LOCK: RADIATOR AND BRACKET MTG, 3/8 IN. 4313 (23382)		EA	8	*	*	*	*	*	*	*	*	52	23
P O	5305-269-2803	SCREW, CAP, HEXAGON HEAD: RADIATOR AND BRACKET MTG, 3/8-24 X 1 IN. LG MS90726-60 (96906)		EA	8	*	*	*	*	*	*	*	*	52	24
X20		BRACKET: RADIATOR MTG, R H 330695 (23382)		EA	1									52	25
X20		BRACKET: RADIATOR MTG, L H 330696 (23382)		EA	1									52	26
P O		SCREW, CAP, HEXAGON HEAD: ELBOW MTG, 7/16-14 X 1 IN. LG 5864 (23382)		EA	2	*	*	*	*	*	*	*	*	52	27
P O	5310-209-0965	WASHER, LOCK: ELBOW MTG, 7/16 IN. MS35338-47 (96906)		EA	2	*	*	*	*	*	*	*	*	52	28
X20		ELBOW, INLET 121091 (23382)		EA	1									52	29
P O	5330-254-5655	WASHER, NONMETALLIC: ELBOW 92504 (23382)		EA	1	*	*	*	*	*	*	*	*	52	30
P O		RADIATOR ASSEMBLY R8421 (46529)		EA	1	*	*	*	*	*	*	*	*	52	31
P O		CAP, RADIATOR G13580 (46529)		EA	1	*	*	*	*	*	*	*	*	52	32
P F		PACKING, PREFORMED G37102 (46529)		EA	1	*	*	*	*	*	*	*	*	52	33
P O	5305-988-1721	SCREW, MACHINE: OVERSLOW CLIP MTG, 1/4-20 X 3/8 IN. LG MS35206-277 (96906)		EA	2	*	*	*	*	*	*	*	*	52	34
X20		CLIP, RETAINER G59387 (46529)		EA	2									52	35
P O		HOSE, RUBBER: OVERFLOW DRAIN G62832 (46529)		EA	1	*	*	*	*	*	*	*	*	52	36
P O		PLUG, PIPE: LOWER TANK, 1/4 IN. NPT G2137 (46529)		EA	1	*	*	*	*	*	*	*	*	52	37
P F		NUT, PLAIN, HEXAGON: TANK MTG, 5/16-18 THO SIZE G2004 (46529)		EA	53	*	*	*	*	*	*	*	*	52	38
P F		WASHER, LOCK: TANK MTG, 5/16 IN. G2009 (46529)		EA	72	*	*	*	*	*	*	*	*	52	39

(1) SMR CODE	(2) FEDERAL STOCK NUMBER	(3) DESCRIPTION REF NUMBER & MFR CODE	USABLE ON CODE	(4) UNIT OF MEAS	(5) QTY INC IN UNIT	(6) 30-DAY DS MAINT ALLOWANCE (a) 1-20	(b) 21-50	(c) 51-100	(7) 30-DAY GS MAINT ALLOWANCE (a) 1-20	(b) 21-50	(c) 51-100	(8) 1-YR ALW PER 100 EQUIP CNTGY	(9) DEPOT MAINT ALW PER 100 EQUIP	(10) ILLUSTRATION (a) FIG. NO.	(b) ITEM NO.
P F		SCREW, CAP, HEXAGON HEAD: TANK MTG, 5/16-18 X 3/4 IN. LG G2022 (46529)		EA	19	*	*	*	*	*	*	*	*	52	40
P F	5306-625-2818	BOLT, MACHINE: TANK MTG, 5/16-18 X 7/8 IN. LG G2032 (46529)		EA	53	*	*	*	*	*	*	*	*	52	41
P F		TANK ASSEMBLY, TOP A1-2925 (46529)		EA	1	*	*	*	*	*	*	*	*	52	42
P F		TANK ASSEMBLY, BOTTOM A2-2702 (46529)		EA	1	*	*	*	*	*	*	*	*	52	43
P F	2930-367-3766	GASKET: TANK G24028 (46529)		EA	4	*	*	*	*	*	*	*	*	52	44
X2F		SIDE ASSEMBLY: LH A4-1475 (46529)		EA	1									52	45
XSF		SIDE ASSEMBLY: RH A3-1475 (46529)		EA	1									52	46
P F		CORE ASSEMBLY, RADIATOR T2061 (46529)		EA	1	*	*	*	*	*	*	*	*	52	47
P F		WASHER, CORE G98009 (46529)		EA	4	*	*	*	*	*	*	*	*		
		GROUP 11 - FUEL TANKS AND LINES													
P O		NUT, PLAIN, HEXAGON: FUEL HOSE CLAMP MTG, 5/16-24 THD SIZE 4202 (23382)		EA	2	*	*	*	*	*	*	*	*	53	1
P O		WASHER, LOCK: FUEL HOSE CLAMP MTG, 5/16 IN. 4318 (23382)		EA	2	*	*	*	*	*	*	*	*	53	2
P O	5306-225-9087	BOLT, MACHINE: FUEL HOSE CLAMP MTG, 5/16-24 X 3/4 IN. LG MS90726-32 (96906)		EA	2	*	*	*	*	*	*	*	*	53	3
P O		CLAMP, INSULATED: FUEL HOSE COV2111 (75272)		EA	2	*	*	*	*	*	*	*	*	53	4
P O		HOSE ASSEMBLY: FUEL FILTER TO PUMP 134191 (23382)		EA	1	*	*	*	*	*	*	*	*	53	5
P O		HOSE ASSEMBLY: FUEL RETURN LINE 134192 (23382)		EA	1	*	*	*	*	*	*	*	*	53	6
P O		HOSE ASSEMBLY: FUEL TANK TO FILTER 134193 (23382)		EA	1	*	*	*	*	*	*	*	*	53	7
P O		HOSE ASSEMBLY: TANK CONNECTING 138127 (23382)		EA	1	*	*	*	*	*	*	*	*	53	8
P O	4730-288-9944	ADAPTER, PIPE TO HOSE: FUEL VALVE 8GTXS (45681)		EA	1	*	*	*	*	*	*	*	*	53	9
P O		VALVE, 2-WAY: FUEL TANK 10001507 (23382)		EA	1	*	*	*	*	*	*	*	*	53	10
P O		ELBOW, PIPE TO HOSE: FUEL LINE 10615083 (23382)		EA	4	*	*	*	*	*	*	*	*	53	11
P O	4820-226-8499	VALVE, CHECK: FUEL STRAINER 5135308 (72582)		EA	1	*	*	*	*	*	*	*	*	53	12
P O		ELBOW, PIPE: FUEL LINE, 3/8 IN. NPT 6515 (23382)		EA	2	*	*	*	*	*	*	*	*	53	13
P O		COUPLING, PIPE: FUEL LINE TO PUMP 6570 (23382)		EA	1	*	*	*	*	*	*	*	*	53	14

(1) SMR CODE	(2) FEDERAL STOCK NUMBER	(3) DESCRIPTION REF NUMBER & MFR CODE	USABLE ON CODE	(4) UNIT OF MEAS	(5) QTY INC IN UNIT	(6) 30-DAY DS MAINT ALLOWANCE (a) 1-20	(b) 21-50	(c) 51-100	(7) 30-DAY GS MAINT ALLOWANCE (a) 1-20	(b) 21-50	(c) 51-100	(8) 1-YR ALW PER 100 EQUIP CNTGY	(9) DEPOT MAINT ALW PER 100 EQUIP	(10) ILLUSTRATION (a) FIG. NO.	(b) ITEM NO.
P O	4730-199-3555	NIPPLE, CLOSE: FUEL PUMP		FT	1	*	*	*	*	*	*	*	*	53	15
P O		ELBOW, PIPE TO HOSE: FUEL RETURN LINE 8-4CTXS (45681)		EA	1	*	*	*	*	*	*	*	*	53	16
P O	4730-618-4556	COUPLING, PIPE: FUEL LINE TO ENGINE, 1/4 IN. NPT 4527 (23382)		EA	1	*	*	*	*	*	*	*	*	53	17
P O		CONNECTOR: FUEL LINE TO ENGINE 10100181 (23382)		EA	1	*	*	*	*	*	*	*	*	53	18
P O	4730-231-3016	ELBOW, PIPE TO TUBE: FUEL TANK CROSSOVER LINE 12-8CTXS (45681)		EA	2	*	*	*	*	*	*	*	*	53	19
P O	5310-763-8905	NUT, PLAIN, HEXAGON: FUEL TANK MTG, 5/8-18 THD SIZE MS51968-20 (96906)		EA	8	*	*	*	*	*	*	*	*	54	1
P O	5310-820-6653	WASHER, LOCK: TANK MTG, 5/8 IN. MS35338-50 (96906)		EA	8	*	*	*	*	*	*	*	*	54	2
P O	5310-752-5555	WASHER, FLAT: TANK MTG, 5/8 IN.		EA	8	*	*	*	*	*	*	*	*	54	3
P O	5305-727-5677	SCREW, CAP, HEXAGON HEAD: TANK MTG, 5/8-18 X 1 1/2 IN. LG MS90726-162 (96906)		EA	8	*	*	*	*	*	*	*	*	54	4
X20		BRACKET, MOUNTING: SIDE 1066D (98624)		EA	4									54	5
P O		NUT, PLAIN, HEXAGON: TANK STRAP, 5/8-18 THD SIZE 84 (98624)		EA	4	*	*	*	*	*	*	*	*	54	6
P O		WASHER, LOCK: TANK STRAP, 5/8 IN. 86 (98624)		EA	4	*	*	*	*	*	*	*	*	54	7
P O		ANTI-SQUEAK TAPE 1000710 (23382)		FT	24	*	*	*	*	*	*	*	*	54	8
P O	4730-777-4131	PLUG, PIPE: TANK HOLE, 1/4 IN. NPT		EA	2	*	*	*	*	*	*	*	*	54	9
P20		TANK ASSEMBLY, FUEL 2424 (98624)		EA	2	*	*	*	*	*	*	*	*	54	10
P O		PLUG, DRAIN 101 (98624)		EA	2	*	*	*	*	*	*	*	*	54	11
P O	2910-442-5844	CAP ASSEMBLY: FUEL TANK 218 (98624)		EA	2	*	*	*	*	*	*	*	*	54	12
P O		GASKET: CAP 361 (98624)		EA	2	*	*	*	*	*	*	*	*	54	13
P O		STRAINER, FUEL EX678 (98624)		EA	2	*	*	*	*	*	*	*	*	54	14
P O		CHAIN, RETAINING 453 (98624)		EA	2	*	*	*	*	*	*	*	*	54	15
P O		SCREW, MACHINE: COVER AND TRANSMITTER 10-32X1 (98624)		EA	10	*	*	*	*	*	*	*	*	54	16
P O	2910-127-5044	GASKET: FUEL TANK 31290 (13841)		EA	2	*	*	*	*	*	*	*	*	54	17
X2F		TUBE, FEED LINE 266L (98624)		EA	2									54	18
X20		PLATE, COVER: FUEL TRANSMITTER HOLE 531 (98624)		EA	1									54	19
P O	6680-725-4066	TRANSMITTER, LIQUID PRESSURE: 24V 507P24V (57733)		EA	1	*	*	*	*	*	*	*	*	54	20

(1) SMR CODE	(2) FEDERAL STOCK NUMBER	(3) DESCRIPTION REF NUMBER & MFR CODE	USABLE ON CODE	(4) UNIT OF MEAS	(5) QTY INC IN UNIT	(6) 30-DAY DS MAINT ALLOWANCE (a) 1-20	(b) 21-50	(c) 51-100	(7) 30-DAY GS MAINT ALLOWANCE (a) 1-20	(b) 21-50	(c) 51-100	(8) 1-YR ALW PER 100 EQUIP CNTGY	(9) DEPOT MAINT ALW PER 100 EQUIP	(10) ILLUSTRATION (a) FIG. NO.	(b) ITEM NO.
		GROUP 12 - TRANSMISSION PIPING													
P O		MOUNT, GAGE, RUBBER 202444 (61208)		EA	1	*	*	*	*	*	*	*	*	55	1
P O	6685-499-8790	GAGE, OIL PRESSURE: TRANSMISSION 202776 (61208)		EA	1	*	*	*	*	*	*	*	*	55	2
P F	4730-618-4556	COUPLING, PIPE: TRANSMISSION GAGE LINE, 1/4 IN. NPT 4527 (23382)		EA	1	*	*	*	*	*	*	*	*	55	3
P F		CONNECTOR, PIPE TO TUBE: GAGE LINE, 1/4 IN. NPT, 1/4 IN. TUBE 10615169 (23382)		EA	1	*	*	*	*	*	*	*	*	55	4
P F		TUBE ASSEMBLY: GAGE LINE 138103 (23882)		EA	1	*	*	*	*	*	*	*	*	55	5
P F		UNION, TUBE: GAGE LINE, 1/4 IN. 10615239 (23382)		EA	1	*	*	*	*	*	*	*	*	55	6
P F		HOSE ASSEMBLY: GAGE LINE 138093 (23382)		EA	1	*	*	*	*	*	*	*	*	55	7
P F	4730-878-2180	ADAPTER, STRAIGHT, TUBE TO BOSS: GAGE LINE 4F50XS (45681)		EA	1	*	*	*	*	*	*	*	*	55	8
P O	2530-730-7052	HOSE ASSEMBLY: FILTER 134129 (23382)		EA	1	*	*	*	*	*	*	*	*	55	9
P O		HOSE ASSEMBLY: FILTER RETURN 134188 (23382)		EA	1	*	*	*	*	*	*	*	*	55	10
P O	4720-725-4052	HOSE ASSEMBLY: PUMP OUTLET 134131 (23382)		EA	1	*	*	*	*	*	*	*	*	55	11
P O		HOSE ASSEMBLY: PORT C, TRANSMISSION 138277 (23382)		EA	1	*	*	*	*	*	*	*	*	55	12
P O		HOSE ASSEMBLY: SOLENOID VALVE TO TRANSMISSION, PORT A 134191 (23382)		EA	1	*	*	*	*	*	*	*	*	55	13
P O		NUT, TUBE: TRANSMISSION TUBING, 3/4 IN. 10615046 (23382)		EA	6	*	*	*	*	*	*	*	*	55	14
P O		SLEEVE, TUBE: TRANSMISSION TUBING, 3/4 IN. 10615047 (23382)		EA	4	*	*	*	*	*	*	*	*	55	15
P O		TUBING, COPPER: TRANSMISSION 3/4 IN., 15 FT REQUIRED 197698 (23382)		FT	V	*	*	*	*	*	*	*	*	55	16
P O		TUBE ASSEMBLY: SOLENOID VALVE 138276 (23382)		EA	1	*	*	*	*	*	*	*	*	55	17
P O	4730-818-2467	ELBOW, TUBE: TRANSMISSION TUBING 8C6XS (45681)		EA	3	*	*	*	*	*	*	*	*	55	18
P O		REDUCER, TUBE 10615602 (23382)		EA	2	*	*	*	*	*	*	*	*	55	19
P O		ELBOW, TUBE 10615250 (23382)		EA	2	*	*	*	*	*	*	*	*	55	20
P O		ADAPTER, TUBE F50G5 (45681)		EA	2	*	*	*	*	*	*	*	*	55	21
P O		TUBE ASSEMBLY: SOLENOID VALVE TO CROSS 138275 (23382)		EA	1	*	*	*	*	*	*	*	*	55	22
P O		ADAPTER, REDUCER: FILTER AND PUMP OUTLET 12-16JMS (70434)		EA	2	*	*	*	*	*	*	*	*	55	23

(1) SMR CODE	(2) FEDERAL STOCK NUMBER	(3) DESCRIPTION REF NUMBER & MFR CODE	USABLE ON CODE	(4) UNIT OF MEAS	(5) QTY INC IN UNIT	(6) 30-DAY DS MAINT ALLOWANCE (a) 1-20	(b) 21-50	(c) 51-100	(7) 30-DAY GS MAINT ALLOWANCE (a) 1-20	(b) 21-50	(c) 51-100	(8) 1-YR ALW PER 100 EQUIP CNTGY	(9) DEPOT MAINT ALW PER 100 EQUIP	(10) ILLUSTRATION (a) FIG. NO.	(b) ITEM NO.
P O		PACKING, PREFORMED: FILTER AND PUMP OUTLET ADAPTER 3-16-145-140 (45681)		EA	2	*	*	*	*	*	*	*	*	55	24
P O		REDUCER, PIPE: PUMP OUTLET TO TEE LINE, 3/4 X 3/8 IN. NPT 10100573 (23382)		EA	1	*	*	*	*	*	*	*	*	55	25
P O		ELBOW, PIPE: RADIATOR CONNECTIONS, 3/4 IN. NPT X 3/4 IN. TUBE 10615110 (23382)		EA	2	*	*	*	*	*	*	*	*	55	26
P O		COUPLING, PIPE: RADIATOR CONNECTION 6984 (23382)		EA	1	*	*	*	*	*	*	*	*	55	27
P O		NIPPLE, CLOSE: RADIATOR CONNECTION, 3/4 IN. 7435 (23382)		EA	2	*	*	*	*	*	*	*	*	55	28
P O		CONNECTOR, PIPE TO TUBE: TUBE TO CROSS, 1/4 IN. NPT, 1/4 IN. TUBE 10615169 (23382)		EA	1	*	*	*	*	*	*	*	*	55	29
P O		BUSHING, REDUCER: CROSS TO SOLENOID LINE, 1/4 IN. X 3/8 IN. NPT 2970 (23382)		EA	1	*	*	*	*	*	*	*	*	55	30
P O		ADAPTER, PIPE: CROSS TO HOSE 10615044 (23382)		EA	2	*	*	*	*	*	*	*	*	55	31
P O	4730-722-2759	ELBOW, PIPE: CROSS TO HOSE WWP521 (81348)		EA	1	*	*	*	*	*	*	*	*	55	32
P O	4730-199-3555	NIPPLE, CLOSE		EA	2	*	*	*	*	*	*	*	*	55	33
P O		CROSS, PIPE: TRANSMISSION LINE, 3/8 IN. NPT 118102 (23382)		EA	1	*	*	*	*	*	*	*	*	55	34
P O		REDUCER, BUSHING: SWITCH AND SENDING UNIT MTG 6566 (23382)		EA	2	*	*	*	*	*	*	*	*	55	35
P O		CROSS, PIPE: RADIATOR CONNECTION, 3/4 IN. NPT 36788 (23382)		EA	1	*	*	*	*	*	*	*	*	55	36
P O		CONNECTOR, O-RING: TRANSMISSION LINE 8F50XF (45681)		EA	2	*	*	*	*	*	*	*	*	55	37
P O	4730-673-1811	ELBOW, TUBE: TRANSMISSION LINES 4C6XS (45681)		EA	3	*	*	*	*	*	*	*	*	55	38
P O	2530-848-8402	ELBOW, PIPE: SOLENOID VALVE 8AEOGS (45681)		EA	1	*	*	*	*	*	*	*	*	55	39
P O	4730-878-2180	ADAPTER, STRAIGHT, TUBE TO BOSS 4F50XS (45681)		EA	2	*	*	*	*	*	*	*	*	55	40
P O	4730-618-5382	TEE, SWIVEL RUN: SOLENOID VALVE 4R6BXS (45681)		EA	1	*	*	*	*	*	*	*	*	55	41
P O		CONNECTOR, O-RING: TRANSMISSION, PORT C 10615139 (23382)		EA	1	*	*	*	*	*	*	*	*	55	42
P O		REDUCER, O-RING 719FS01-2X1-4 (30327)		EA	2	*	*	*	*	*	*	*	*	55	43
P O	5305-068-0502	SCREW, CAP, HEXAGON HEAD: FILTER MTG, 1/4-20 X 3/4 IN. LG		EA	2	*	*	*	*	*	*	*	*	56	1
P O	5310-018-7241	WASHER, LOCK: FILTER MTG, 1/4 IN. 4312 (23382)		EA	2	*	*	*	*	*	*	*	*	56	2
P O		FILTER, OIL: TRANSMISSION M3021 (92863)		EA	1	*	*	*	*	*	*	*	*	56	3

(1) SMR CODE	(2) FEDERAL STOCK NUMBER	(3) DESCRIPTION REF NUMBER & MFR CODE / USABLE ON CODE	(4) UNIT OF MEAS	(5) QTY INC IN UNIT	(6) 30-DAY DS MAINT ALLOWANCE (a) 1-20	(b) 21-50	(c) 51-100	(7) 30-DAY GS MAINT ALLOWANCE (a) 1-20	(b) 21-50	(c) 51-100	(8) 1-YR ALW PER 100 EQUIP CNTGY	(9) DEPOT MAINT ALW PER 100 EQUIP	(10) ILLUSTRATION (a) FIG. NO.	(b) ITEM NO.
P 0		SCREW, CAP, HEXAGON HEAD: COVER MTG 851160-15 (92863)	EA	4	*	*	*	*	*	*	*	*	56	4
X20		COVER ASSEMBLY, FILTER M2609-2A (92863)	EA	1									56	5
P 0		PACKING, PREFORMED: FILTER COVER 851160-4 (92863)	EA	1	*	*	*	*	*	*	*	*	56	6
P 0	3950-842-1163	ELEMENT: FILTER 629206-5110 (92863)	EA	1	*	*	*	*	*	*	*	*	56	7
X20		HOUSING, FILTER 851162-1 (92863)	EA	1									56	8
		GROUP 13 - DRIVE SHAFTS												
P20		SHAFT ASSEMBLY, DRIVE FLEXIBLE: TRANSFER CASE TO REAR AXLE 9549235228 (70960) (SAME AS SHAFT ASSY, P/N 156736 (23382), EXCEPT WHERE ANNOTATED)	EA	1	*	*	*	*	*	*	*	*	57	
P20		SHAFT ASSEMBLY, DRIVE FLEXIBLE: TRANSFER CASE TO TRANSMISSION 9549235229 (70960) (SAME AS SHAFT ASSY, P/N 156736 (23382), EXCEPT WHERE ANNOTATED)	EA	1	*	*	*	*	*	*	*	*	57	
P20		SHAFT ASSEMBLY, DRIVE FLEXIBLE: TRANSFER CASE TO FRONT AXLE 156736 (23382)	EA	1	*	*	*	*	*	*	*	*	57	
X1		NUT, JAM, HEXAGON: CROSS ASSY, 1/2-20 THD SIZE NUJA8-20-6 (70960)	EA	48									57	1
X1		SCREW, CAP HEXAGON HEAD: CROSS ASSY, 1/2-20 X 2 1/2 IN. LG CSH8-20-16 (70960)	EA	48									57	2
P 0		CROSS AND BEARING ASSEMBLY CP68WB67 (70960)	EA	6	*	*	*	*	*	*	*	*	57	3
P 0	4730-050-4208	FITTING, LUBRICATION: CROSS ASSY MS15003-1 (96906)	EA	6	*	*	*	*	*	*	*	*	57	4
X1		CORE, SPLINED 9545535228 (70960) (USED W/SHAFT ASSY P/N 9549235228 (70960), ONLY)	EA	1									57	5
X1		CORE, SPLINED 9545535229 (70960) (USED W/SHAFT ASSY P/N 9549235229 (70960), ONLY)	EA	1									57	5
X1		CORE, SPLINED 72NYSM32-131 (70960) (USED ONLY W/SHAFT ASSY, P/N 156736 (23382), ONLY)	EA	1									57	5
P 0	2520-966-2039	CAP, PILLOW BLOCK DC72N1 (70960)	EA	3	*	*	*	*	*	*	*	*	57	6
X1		CAP, DUST 72N02 (70960)	EA	3									57	7
X1		WASHER, FLAT: DUST SEAL 31102 (70960)	EA	6									57	8
X1		WASHER, FELT 72N13 (70960)	EA	3									57	9
X1		YOKE 72NLS32-55 (70960)	EA	3									57	10

(1) SMR CODE	(2) FEDERAL STOCK NUMBER	(3) DESCRIPTION REF NUMBER & MFR CODE	USABLE ON CODE	(4) UNIT OF MEAS	(5) QTY INC IN UNIT	(6) 30-DAY DS MAINT ALLOWANCE (a) 1-20	(b) 21-50	(c) 51-100	(7) 30-DAY GS MAINT ALLOWANCE (a) 1-20	(b) 21-50	(c) 51-100	(8) 1-YR ALW PER 100 EQUIP CNTGY	(9) DEPOT MAINT ALW PER 100 EQUIP	(10) ILLUSTRATION (a) FIG. NO.	(b) ITE NO
P O	4730-050-4208	FITTING, LUBRICATION SPLINED YOKE MS15003-1 (96906)		EA	3	*	*	*	*	*	*	*	*	57	1
P O		YOKE, UNIVERSAL JOINT: AT REAR AXLE 46342 (23382)		EA	1	*	*	*	*	*	*	*	*	57	1
P O		YOKE, UNIVERSAL JOINT: AT FRONT AXLE 72NYS32-111X (70960) .		EA	1	*	*	*	*	*	*	*	*	57	1
P O		YOKE, UNIVERSAL JOINT: AT TRANSFER CASE, REAR 72NYS28-63X (70960)		EA	2	*	*	*	*	*	*	*	*	57	1
P O		YOKE, UNIVERSAL JOINT: AT TRANSFER FRONT OUTPUT 72NYS24-13X (70960)		EA	1	*	*	*	*	*	*	*	*	57	1
P O		YOKE ASSEMBLY: FLANGE, AT TRANSMISSION 72NF27X (70960)		EA	1	*	*	*	*	*	*	*	*	57	1
P F S	2520-134-8226	TRANSFER ASSEMBLY 108212 (23382)		EA	1	*	*	*	*	*	*	*	*	58	
P F	5310-012-8122	NUT, SELF-LOCKING: OUTPUT SHAFT, FORWARD, 1 1/4-12 THD SIZE 4INTE202 (72962)		EA	1	*	*	*	*	*	*	*	*	58	
P F	5310-352-6339	WASHER, FLAT: OUTPUT SHAFT 122072 (23382)		EA	1	*	*	*	*	*	*	*	*	58	
P F	5305-782-9495	SCREW, CAP, HEXAGON HEAD: BEARING RETAINER, 1/2-13 X 1 1/4 IN. LG MS90725-111 (96906)		EA	6	*	*	*	*	*	*	*	*	58	
P F	5310-834-7606	WASHER, LOCK: OUTPUT SHAFT, 1/2 IN. MS35340-48 (96906)		EA	6	*	*	*	*	*	*	*	*	58	
X2H		RETAINER, BEARING: OUTPUT SHAFT 805091 (23382)		EA	1									58	
P H		RING, RETAINING: OUTPUT SHAFT 5000-334 (79136)		EA	1				*	*	*	*	*	58	
P H	3110-516-5491	BEARING, BALL, ANNULAR: OUTPUT SHAFT 3209 (43334)		EA	1				*	*	*	*	*	58	
P H	5330-737-2612	SEAL, PLAIN, ENCASED: OUTPUT SHAFT 50551S (76680)		EA	1				*	*	*	*	*	58	
P H	5330-753-1265	GASKET: BEARING RETAINER 125617 (23382)		EA	1				*	*	*	*	*	58	
P H	3110-144-8567	BEARING, BALL, ANNULAR: OUTPUT SHAFT 3214 (43334)		EA	1				*	*	*	*	*	58	1
P H	5305-012-0233	SCREW, CAP, HEXAGON HEAD: COUNTERSHAFT COVER, 3/8-16 X 1 IN. LG 4011 (23382)		EA	6				*	*	*	*	*	58	1
P H	5310-018-7123	WASHER, LOCK: COUNTERSHAFT COVER, 3/8 IN. 4313 (23382)		EA	6				*	*	*	*	*	58	1
X2H		COVER, COUNTERSHAFT 804770 (23382)		EA	1									58	1
P H	2520-125-8063	SHIM, COUNTERSHAFT, 0.005 IN. THK 804535 (23382)		EA	3				*	*	*	*	*	58	1
P H	3810-758-9210	SHIM, COUNTERSHAFT, 0.020 IN. THK 804536 (23382)		EA	3				*	*	*	*	*	58	1

(1) SMR CODE	(2) FEDERAL STOCK NUMBER	(3) DESCRIPTION REF NUMBER & MFR CODE	USABLE ON CODE	(4) UNIT OF MEAS	(5) QTY INC IN UNIT	(6) 30-DAY OS MAINT ALLOWANCE (a) 1-20	(b) 21-50	(c) 51-100	(7) 30-DAY GS MAINT ALLOWANCE (a) 1-20	(b) 21-50	(c) 51-100	(8) 1-YR ALW PER 100 EQUIP CNTGY	(9) DEPOT MAINT ALW PER 100 EQUIP	(10) ILLUSTRATION (a) FIG. NO.	(b) ITEM NO.
P H		WIRE, LOCK: STEEL 1000521 (23382)		EA	1				*	*	*	*	*	58	16
P H	5306-352-6621	BOLT, MACHINE, HEXAGON HEAD: COUNTERSHAFT PLATE 6782 (23382)		EA	2				*	*	*	*	*	58	17
X2H		PLATE, END: COUNTERSHAFT 804815 (23382)		EA	1									58	18
P H	3110-155-6746	BEARING, BALL, ANNULAR: COUNTERSHAFT, CLOSED END 1410M (21760)		EA	1				*	*	*	*	*	58	19
P H	5310-012-8122	NUT, PLAIN, HEXAGON: SHAFT YOKE, 1 1/4-12 THD SIZE 4INTE202 (72962)		EA	1				*	*	*	*	*	58	20
P H	5310-013-1050	WASHER, FLAT: INPUT SHAFT MS35338-55 (96906)		EA	1				*	*	*	*	*	58	21
P H	5305-012-0233	SCREW, CAP, HEXAGON HEAD: SEAL RETAINER INPUT SHAFT, 3/8-16 X 1 IN. LG 180122 (24617)		EA	5				*	*	*	*	*	58	22
P H	5310-018-7123	WASHER, LOCK: SEAL RETAINER, 3/8 IN. 4313 (23382)		EA	5				*	*	*	*	*	58	23
X2H		RETAINER, SEAL INPUT SHAFT 804795 (23382)		EA	1									58	24
P H	5330-731-8702	SEAL, PLAIN, ENCASED: INPUT SHAFT 415368 (76680)		EA	1				*	*	*	*	*	58	25
P H	5330-753-1259	GASKET, RETAINER: INPUT SHAFT 125298 (23382)		EA	1				*	*	*	*	*	58	26
P H	3110-554-3468	BEARING, BALL: INPUT SHAFT, DRIVE END 3309X1 (43334)		EA	1				*	*	*	*	*	58	27
P F	5310-975-2075	NUT, PLAIN, HEXAGON: CASE COVER MTG, 3/8-24 THD SIZE MS35691-21 (96906)		EA	24	*	*	*	*	*	*	*	*	58	28
P F	5310-018-7123	WASHER, LOCK: CASE COVER MTG, 3/8 IN. 4313 (23382)		EA	24	*	*	*	*	*	*	*	*	58	29
P F		SCREW, CAP, HEXAGON HEAD: CASE COVER MTG, 3/8-24 X 1 3/4 IN. LG 4002 (23382)		EA	24	*	*	*	*	*	*	*	*	58	30
X1		CASE 805214 (23382)		EA	1									58	31
P H	5330-292-0492	SEAL, PLAIN, ENCASED: SHIFTER SHAFT 50027 (76680)		EA	2				*	*	*	*	*	58	32
X2H		PIN, STRAIGHT, HEADLESS: 3/8 IN. DIA, 1 1/4 IN. LG 79445 (23382)		EA	2									58	33
P H	5310-935-9088	NUT, SELF LOCKING: CLUTCH SHAFT, 1-12 THD SIZE 4INTE164 (72962)		EA	1				*	*	*	*	*	58	34
P H		WASHER, FLAT: CLUTCH SHAFT 754447 (23382)		EA	1				*	*	*	*	*	58	35
P H	5330-753-1267	SEAL, PLAIN: CLUTCH SHAFT 410614 (76680)		EA	1				*	*	*	*	*	58	36
P H	5340-806-4636	RING, RETAINING: CLUTCH SHAFT N5000-315 (79136)		EA	1				*	*	*	*	*	58	37

(1) SMR CODE	(2) FEDERAL STOCK NUMBER	(3) DESCRIPTION REF NUMBER & MFR CODE USABLE ON CODE	(4) UNIT OF MEAS	(5) QTY INC IN UNIT	(6) 30-DAY DS MAINT ALLOWANCE (a) 1-20	(b) 21-50	(c) 51-100	(7) 30-DAY GS MAINT ALLOWANCE (a) 1-20	(b) 21-50	(c) 51-100	(8) 1-YR ALW PER 100 EQUIP CNTGY	(9) DEPOT MAINT ALW PER 100 EQUIP	(10) ILLUSTRATION (a) FIG NO.	(b) ITEM NO.
P H	3110-554-5302	BEARING, BALL, ANNULAR: CLUTCH SHAFT 3208 (43334)	EA	1				*	*	*	*	*	58	38
P H	5305-012-0233	SCREW, CAP, HEXAGON HEAD: HOUSING COVER, 3/8-16 X 1 IN. LG 4011 (23382)	EA	10				*	*	*	*	*	58	39
P H	5310-018-7123	WASHER, LOCK: HOUSING COVER, 3/8 IN. 4313 (23382)	EA	10				*	*	*	*	*	58	40
X2H		CLOCK, CYLINDER ASSEMBLY 804755 (23382)	EA	1									58	41
P H	3110-765-1819	BEARING, THRUST 93247 (23382)	EA	1				*	*	*	*	*	58	42
P H	5330-757-3467	PACKING, PREFORMED: BEARING 194608 (23382)	EA	1				*	*	*	*	*	58	43
P H	5330-757-3466	PACKING, PREFORMED: SHAFT 194647 (23382)	EA	1				*	*	*	*	*	58	44
X2H		COVER, CLUTCH 804754 (23382)	EA	1									58	45
P O	2530-119-3725	SCREWS, BLEEDER FC6446 (63477)	EA	1	*	*	*	*	*	*	*	*	58	46
P O	2520-821-9439	ADAPTER, BLEEDER FITTING 804019 (23382)	EA	1	*	*	*	*	*	*	*	*	58	46A
P H	5330-731-8660	GASKET, COVER: CLUTCH SHAFT 754456 (23382)	EA	1				*	*	*	*	*	58	47
X2H		SPACER, LOCKOUT 804001 (23382)	EA	1									58	48
P H	2520-730-6944	DISK, OPPOSING: LOCKOUT 754449 (23382)	EA	7				*	*	*	*	*	58	49
P H	2520-730-6941	DISK, LOCKOUT 754450 (23382)	EA	7				*	*	*	*	*	58	50
X2H		SPACER, LOCKOUT 804001 (23382)	EA	1									58	51
X2H		CONE, CLUTCH 804244 (23382)	EA	1									58	52
P H	5340-690-8607	SHAFT, PINION DRIVE 804006 (23382)	EA	1				*	*	*	*	*	58	53
P H	5340-806-4636	RING, RETAINING: CLUTCH DISK N5000-315 (79136)	EA	1				*	*	*	*	*	58	54
P H	2520-730-6949	DISK, CLUTCH 804000 (23382)	EA	1				*	*	*	*	*	58	55
P H	5305-012-0233	SCREW, CAP, HEXAGON HEAD: CLUTCH HOUSING, 3/8-16 X 1 IN. LG 4011 (23382)	EA	6				*	*	*	*	*	58	56
P H	5310-018-7123	WASHER, LOCK: CLUTCH HOUSING, 3/8 IN. 4313 (23382)	EA	6				*	*	*	*	*	58	57
X2H		HOUSING, CLUTCH 804589 (23382)	EA	1									58	58
P H	5340-598-1414	RING, RETAINING: CLUTCH HOUSING MS11625-575 (96906)	EA	1				*	*	*	*	*	58	59
P H	3110-555-5423	BEARING, BALL, ANNULAR: CLUTCH HOUSING 3L17X1 (43334)	EA	1				*	*	*	*	*	58	60

(1) SMR CODE	(2) FEDERAL STOCK NUMBER	(3) DESCRIPTION REF NUMBER & MFR CODE	USABLE ON CODE	(4) UNIT OF MEAS	(5) QTY INC IN UNIT	(6) 30-DAY OS MAINT ALLOWANCE (a) 1-20	(b) 21-50	(c) 51-100	(7) 30-DAY GS MAINT ALLOWANCE (a) 1-20	(b) 21-50	(c) 51-100	(8) 1-YR ALW PER 100 EQUIP CNTGY	(9) DEPOT MAINT ALW PER 100 EQUIP	(10) ILLUSTRATION (a) FIG. NO.	(b) ITEM NO.
P O	4730-045-9771	PLUG, PIPE: CLUTCH HOUSING, 1/2 IN. NPT MS49006-8 (96906)		EA	1	*	*	*	*	*	*	*	*	58	61
P H	2520-755-7190	GASKET: CLUTCH HOUSING 125615 (23382)		EA	1				*	*	*	*	*	58	62
X2H		CASE ASSEMBLY, DIFFERENTIAL 804742 (23382)		EA	1									58	63
P H		NUT, PLAIN, HEXAGON: DIFFERENTIAL CASE, 1/2-20 THD SIZE 52E80 (72962)		EA	4				*	*	*	*	*	58	64
P H	5305-168-8182	SCREW, CAP, HEXAGON HEAD: DIFFERENTIAL CASE, 1/2-20 X 2 1/2 IN. LG MS90726-117 (96906)		EA	4				*	*	*	*	*	58	65
X1		CASE 804838 (23382)		EA	1									58	66
P H	3950-077-1519	BUSHING, CASE F2349 (71366)		EA	1				*	*	*	*	*	58	67
X1		CASE 804839 (23382)		EA	1									58	68
P H	3950-077-1519	BUSHING, CASE F2349 (71366)		EA	1				*	*	*	*	*	58	69
P H		GEAR, SIDE: DIFFERENTIAL 125292 (23382)		EA	2				*	*	*	*	*	58	70
P H	3120-736-4248	WASHER, THRUST: DIFFERENTIAL CASE 804198 (23382)		EA	2				*	*	*	*	*	58	71
P H	3120-736-5057	WASHER, THRUST: PINION SHAFT 804249 (23382)		EA	2				*	*	*	*	*	58	72
P H	2520-730-8083	GEAR, HELICAL: DIFFERENRIAL PINION 399783 (23382)		EA	2				*	*	*	*	*	58	73
P H		SHAFT, PINION: DIFFERENTIAL 125654 (23382)		EA	1				*	*	*	*	*	58	74
X2H		PIN, ROLL: PINION SHAFT 52-062-312-1250 (72962)		EA	1									58	75
P H		GEAR, SIDE: DIFFERENTIAL 125292 (23382)		EA	1				*	*	*	*	*	58	76
P H	3120-736-4248	WASHER, THRUST: DIFFERENTIAL CASE 804198 (23382)		EA	1				*	*	*	*	*	58	77
P H	5365-282-6962	RING, RETAINING: OUTPUT SHAFT GEAR MS16624-375 (96906)		EA	1				*	*	*	*	*	58	78
P H		GEAR, HELICAL: DRIVEN, 58T 804333 (23382)		EA	1				*	*	*	*	*	58	79
X2H		KEY, MACHINE: DRIVEN GEAR, 1/2 X 1/2 X 2.81 IN. 164460 (23382)		EA	2									58	80
P H		SHAFT, POWER DIVIDER 804850 (23382)		EA	1				*	*	*	*	*	58	81
P F		GOVERNOR: TRANSFER CASE 4621 (02129)		EA	1	*	*	*	*	*	*	*	*	58	82
X2H		SHAFT, GOVERNOR DRIVE 805084 (23382)		EA	1									58	83
X2H	4730-202-9539	SLEEVE, GOVERNOR DRIVE 12981 (23382)		EA	2									58	84

(1) SMR CODE	(2) FEDERAL STOCK NUMBER	(3) DESCRIPTION REF NUMBER & MFR CODE	USABLE ON CODE	(4) UNIT OF MEAS	(5) QTY INC IN UNIT	(6) 30-DAY DS MAINT ALLOWANCE (a) 1-20	(b) 21-50	(c) 51-100	(7) 30-DAY GS MAINT ALLOWANCE (a) 1-20	(b) 21-50	(c) 51-100	(8) 1-YR ALW PER 100 EQUIP CNTGY	(9) DEPOT MAINT ALW PER 100 EQUIP	(10) ILLUSTRATION (a) FIG. NO.	(b) ITEM NO.
P H		FITTING, PIPE: SPEEDOMETER DRIVE 10000572 (23382)		EA	1				*	*	*	*	*	58	85
P H	2520-888-2371	GEAR, DRIVE: SPEEDOMETER 51728 (23382)		EA	1				*	*	*	*	*	58	86
P H	5305-012-0233	SCREW, CAP, HEXAGON HEAD: SPEEDOMETER HOUSING, 3/8-16 X 1 IN. LG 4011 (23382)		EA	4				*	*	*	*	*	58	87
P H	5310-018-7123	WASHER, LOCK: SPEEDOMETER HOUSING, 3/8 IN. 4313 (23382)		EA	5				*	*	*	*	*	58	88
X2H		HOUSING: SPEEDOMETER DRIVE 805086 (23382)		EA	1									58	89
P H	2520-081-9850	BUSHING, SPEEDOMETER DRIVE P11-012 (57733)		EA	1				*	*	*	*	*	58	90
P H	2520-730-6884	GASKET, HOUSING: SPEEDOMETER DRIVE 125295 (23382)		EA	1				*	*	*	*	*	58	91
P H		WIRE, LOCK: COUNTERSHAFT PLATE, 18 GA. 1000521 (23382)		EA	1				*	*	*	*	*	58	92
P H	5306-352-6621	BOLT, MACHINE, HEXAGON HEAD 6782 (23382)		EA	2				*	*	*	*	*	58	93
X2H		PLATE, SHAFT END: SPEEDOMETER DRIVE END 405085 (23382)		EA	1									58	94
P H	2520-804-7049	GEAR, DRIVE: SPEEDOMETER 51727 (23382)		EA	1				*	*	*	*	*	58	95
P H		KEY, GEAR: SPEEDOMETER DRIVE 109004 (23382)		EA	1				*	*	*	*	*	58	96
X2H		SPACER, SPEEDOMETER: DRIVE GEAR 125249 (23382)		EA	1									58	97
P H	3110-540-4656	BEARING, BALL, ANNULAR: COUNTERSHAFT, GOVERNOR END 84575 (23382)		EA	1				*	*	*	*	*	58	98
P H		GEAR, SPUR: COUNTERSHAFT, 57 TEETH 805216 (23382)		EA	1				*	*	*	*	*	58	99
P H		GEAR, HELICAL, DRIVE: COUNTERSHAFT 41 TEETH 804857 (23382)		EA	1				*	*	*	*	*	58	100
P H		GEAR, SPUR: COUNTERSHAFT, 44 TEETH 805217 (23382)		EA	1				*	*	*	*	*	58	101
P H		KEY, MACHINE: COUNTERSHAFT 804813 (23382)		EA	2				*	*	*	*	*	58	102
P H		COUNTERSHAFT: GEAR CASE 804809 (23382)		EA	1				*	*	*	*	*	58	103
P H	5305-012-0233	SCREW, CAP, HEXAGON HEAD: INPUT SHAFT COVER, 3/8-16 X 1 IN. LG 4011 (23382)		EA	6				*	*	*	*	*	58	104
P H	5310-018-7123	WASHER, LOCK: INPUT SHAFT COVER, 3/8 IN. 4313 (23382)		EA	6				*	*	*	*	*	58	105
X2H		COVER, INPUT SHAFT 805232 (23382)		EA	1									58	106
P H	5340-123-2686	SHIM, BEARING RETAINER: INPUT SHAFT, 0.005 IN. THK 804537 (23382)		EA	3				*	*	*	*	*	58	107

(1) SMR CODE	(2) FEDERAL STOCK NUMBER	(3) DESCRIPTION REF NUMBER & MFR CODE	USABLE ON CODE	(4) UNIT OF MEAS	(5) QTY INC IN UNIT	(6) 30-DAY DS MAINT ALLOWANCE (a) 1-20	(b) 21-50	(c) 51-100	(7) 30-DAY GS MAINT ALLOWANCE (a) 1-20	(b) 21-50	(c) 51-100	(8) 1-YR ALW PER 100 EQUIP CNTGY	(9) DEPOT MAINT ALW PER 100 EQUIP	(10) ILLUSTRATION (a) FIG. NO.	(b) ITEM NO.
P H	5340-726-0620	SPACER PLATE: INPUT SHAFT, 0.020 IN. THK 804538 (23382)		EA	3				*	*	*	*	*	58	108
P H		WIRE, LOCK: STEEL 1000521 (23382)		EA	1				*	*	*	*	*	58	109
P H		SCREW, CAP, HEXAGON HEAD: END PLATE, 1/4-28 X 3/4 IN. LG 165178 (23382)		EA	2				*	*	*	*	*	58	110
X2H		PLATE, END: INPUT SHAFT 804768 (23382)		EA	1									58	111
P H	3110-554-5950	BEARING, BALL: W/LOCKRING, INPUT SHAFT CLOSED END 43309 (43334)		EA	1				*	*	*	*	*	58	112
X2H		SPACER, GEAR: INPUT SHAFT CLOSED END 804765 (23382)		EA	1									58	113
P H		GEAR, SPUR: INPUT SHAFT, 44 TEETH 805087 (23382)		EA	1				*	*	*	*	*	58	114
P H	3110-529-9480	BEARING, BALL, ANNULAR: INPUT SHAFT 6010J (52676)		EA	4				*	*	*	*	*	58	115
X2H		SPACER, BEARING: INPUT SHAFT 804769 (23382)		EA	2									58	116
P H	5340-806-4636	RING, RETAINING: INPUT SHAFT GEAR MS16625-315 (96906)		EA	2				*	*	*	*	*	58	117
X2H		SPACER, GEAR: INPUT SHAFT, DRIVE END 804794 (23382)		EA	1									58	118
P H	3020-248-3677	GEAR, SPUR: INPUT SHAFT, 31 TEETH 805089 (23382)		EA	1				*	*	*	*	*	58	119
P H	3110-529-9480	BEARING, BALL, ANNULAR: INPUT SHAFT 6010J (52676)		EA	2				*	*	*	*	*	58	120
X2H		SPACER, BEARING: INPUT SHAFT 804769 (23382)		EA	1									58	121
P H	5340-806-4636	RING, RETAINING: INPUT SHAFT GEAR MS16625-315 (96906)		EA	1				*	*	*	*	*	58	122
P F	2520-803-9589	ROD END, SHIFTER 311540 (23382)		EA	1	*	*	*	*	*	*	*	*	58	123
P F		NUT, PLAIN, HEXAGON: SHIFTER ROD END, 7/16-20 THD SIZE 4204 (23382)		EA	1	*	*	*	*	*	*	*	*	58	124
P H		SHAFT, GEAR SHIFT 805226 (23382)		EA	1				*	*	*	*	*	58	125
P H	5305-352-6364	SETSCREW: SHIFTER YOKE, 7/16-20 X 0.81 IN. LG 122559 (23382)		EA	1				*	*	*	*	*	58	126
P H		YOKE, SHIFTER 804759 (23382)		EA	1				*	*	*	*	*	58	127
P H		CONE, SHIFT: INPUT SHAFT 804762 (23382)		EA	1				*	*	*	*	*	58	128
P H	5340-720-1456	SHAFT, INPUT 804792 (23382)		EA	1				*	*	*	*	*	58	129
P H	5330-292-0492	SEAL, PLAIN: ENCASED: SHIFTER SHAFT 50027 (76680)		EA	1				*	*	*	*	*	58	130

(1) SMR CODE	(2) FEDERAL STOCK NUMBER	(3) DESCRIPTION REF NUMBER & MFR CODE / USABLE ON CODE	(4) UNIT OF MEAS	(5) QTY INC IN UNIT	(6) 30-DAY OS MAINT ALLOWANCE (a) 1-20	(b) 21-50	(c) 51-100	(7) 30-DAY GS MAINT ALLOWANCE (a) 1-20	(b) 21-50	(c) 51-100	(8) 1-YR ALW PER 100 EQUIP CNTGY	(9) DEPOT MAINT ALW PER 100 EQUIP	(10) ILLUSTRATIO (a) FIG. NO.	(b) IT N
P F	2520-132-3160	FITTING, PRESSURE RELIEF: 1/8 IN. NPT G326315 (57733)	EA	1	*	*	*	*	*	*	*	*	58	1
P F	5305-782-9495	SCREW, CAP, HEXAGON HEAD: SPRING RETAINER, 1/2-13 X 1 1/4 IN. LG MS90725-111 (96906)	EA	1	*	*	*	*	*	*	*	*	58	1
P H		NUT, PLAIN, HEXAGON: DETENT SCREW, 1/2-13 THD SIZE 2390 (23382)	EA	1				*	*	*	*	*	58	1
P H	5360-404-6266	SPRING, HELICAL, COMPRESSION 804704 (23382)	EA	1				*	*	*	*	*	58	1
P H		BALL, STEEL, DETENT 171042 (23382)	EA	1				*	*	*	*	*	58	1
P O	4730-045-9833	PLUG, PIPE: OIL DRAIN, 1 IN. NPT 404PQ (36540)	EA	1	*	*	*	*	*	*	*	*	58	1
P O		PLUG, PIPE: OIL FILLER, 1 IN. NPT 4504 (23382)	EA	1	*	*	*	*	*	*	*	*	58	1
X1		CASE, FRONT HALF 805215 (23382)	EA	1									58	1
		GROUP 14 - TRANSMISSION AND RELATED PARTS												
P H	5310-014-2247	NUT, PLAIN, HEXAGON VALVE MTG, 1/4-28 THD SIZE 4200 (23382)	EA	4				*	*	*	*	*	59	
P H	5310-018-7241	WASHER, LOCK: VALVE MTG, 1/4 IN. 4312 (23382)	EA	4				*	*	*	*	*	59	
P H		SCREW, CAP, HEXAGON HEAD: VALVE MTG, 1/4-28 X 2 1/2 IN. LG 6977 (23382)	EA	4				*	*	*	*	*	59	
P H R		VALVE ASSEMBLY, SOLENOID UXA4394 (61208)	EA	1				*	*	*	*	*	59	
P H		SCREW, CAP. SOCKET HEAD: SOLENOID TO BODY, NO. 10-32 X 1 3/4 IN. LG UA4619 (61208)	EA	4				*	*	*	*	*	59	
P H		SUBASSEMBLY: SOLENOID END UXB4474-1 (61208)	EA	1				*	*	*	*	*	59	
P H		SCREW, CAP, SOCKET HEAD: VALVE END TO BODY, NO. 10-32 X 5/8 IN. LG UA4618 (61208)	EA	4				*	*	*	*	*	59	
P H		SUBASSEMBLY: MECHANICAL END UXB4474-3 (61208)	EA	1				*	*	*	*	*	59	
P H		SUBASSEMBLY: VALVE BODY UXB4474-2 (61208)	EA	1				*	*	*	*	*	59	
P F S	2520-410-4449	TRANSMISSION ASSEMBLY TOLC22-420-2 (61208)	EA	1	*	*	*	*	*	*	*	*	60	
P F		SCREW, CAP, HEXAGON HEAD: VALVE MTG, 3/8-16 X 2 IN. LG M2002BA (61208)	EA	1	*	*	*	*	*	*	*	*	60	
P F		WASHER, COPPER: 3/8 IN. M201365 (61208)	EA	4	*	*	*	*	*	*	*	*	60	
P F		SCREW, CAP, HEXAGON HEAD: VALVE MTG, 3/8-16 X 3 3/4 IN. LG M2002CE (61208)	EA	3	*	*	*	*	*	*	*	*	60	

(1) 5MR CODE	(2) FEDERAL STOCK NUMBER	(3) DESCRIPTION REF NUMBER & MFR CODE	USABLE ON CODE	(4) UNIT OF MEAS	(5) QTY INC IN UNIT	(6) 30-DAY DS MAINT ALLOWANCE (a) 1-20	(b) 21-50	(c) 51-100	(7) 30-DAY GS MAINT ALLOWANCE (a) 1-20	(b) 21-50	(c) 51-100	(8) 1-YR ALW PER 100 EQUIP CNTGY	(9) DEPOT MAINT ALW PER 100 EQUIP	(10) ILLUSTRATION (a) FIG. NO.	(b) ITEM NO.
P F	5330-408-5959	GASKET, HOUSING P1094 (61208)		EA	1	*	*	*	*	*	*	*	*	60	4
P F R		VALVE ASSEMBLY, CONTROL UXB4469 (61208)		EA	1	*	*	*	*	*	*	*	*	60	
P F		PLUG, PIPE: SPRING RETAINING, 1/2 IN. NPT UA1479B (61208)		EA	1	*	*	*	*	*	*	*	*	60	5
P F	5360-433-3771	SPRING, VALVE: PRESSURE RISE A27032 (61208)		EA	1	*	*	*	*	*	*	*	*	60	6
X2F		PISTON (10 PSI) UA5054 (61208)		EA	1									60	7
P F		SCREW, CAP, HEXAGON HEAD: PLATE MTG, 3/8-16 X 1.38 IN. LG M2002U (61208)		EA	4	*	*	*	*	*	*	*	*	60	8
P F		WASHER, COPPER: 3/8 IN. M201365 (61208)		EA	4	*	*	*	*	*	*	*	*	60	9
X2F		PLATE, COVER P1092 (61208)		EA	1									60	10
P F		GASKET, COVER PLATE P1083 (61208)		EA	1	*	*	*	*	*	*	*	*	60	11
P F		PLATE, ORIFICE UA4593 (61208)		EA	1	*	*	*	*	*	*	*	*	60	12
P F		GASKET: ORIFICE PLATE P1093 (61208)		EA	1	*	*	*	*	*	*	*	*	60	13
X2F		PISTON, VALVE B1399 (61208)		EA	1									60	14
P F		SPRING, HELICAL: PISTON UA4999 (61208)		EA	1	*	*	*	*	*	*	*	*	60	15
P F	5360-422-2572	SPRING, HELICAL A2707AB (61208)		EA	1	*	*	*	*	*	*	*	*	60	16
X2F		PISTON, VALVE: PRESSURE RISE UA1739 (61208)		EA	1									60	17
P F		BALL, DETENT M1990H (61208)		EA	1	*	*	*	*	*	*	*	*	60	18
P F	2520-901-0981	SPRING, CHECK VALVE A2703P (61208)		EA	1	*	*	*	*	*	*	*	*	60	19
X2F		PISTON, VALVE UA4862 (61208)		EA	1									60	20
X2F		CYLINDER, VALVE UA4861 (61208)		EA	1									60	21
X2F		PISTON (40 PSI) P1086 (61208)		EA	1									60	22
X2F		PLUG, VALVE BODY M2080E (61208)		EA	2									60	23
P F	5330-258-7472	PACKING, PREFORMED: PLUG A29160K (61208)		EA	2	*	*	*	*	*	*	*	*	60	24
X2H		HOUSING, VALVE UC4173 (61208)		EA	1									60	25
P F		WASHER, PRESSURE REGULATING UA1908 (61208)		EA	V	*	*	*	*	*	*	*	*	60	
P F		WASHER, PRESSURE REGULATING UA1908A (61208)		EA	V	*	*	*	*	*	*	*	*	60	

(1) SMR CODE	(2) FEDERAL STOCK NUMBER	(3) DESCRIPTION REF NUMBER & MFR CODE	USABLE ON CODE	(4) UNIT OF MEAS	(5) QTY INC IN UNIT	(6) 30-DAY OS MAINT ALLOWANCE (a) 1-20	(b) 21-50	(c) 51-100	(7) 30-DAY GS MAINT ALLOWANCE (a) 1-20	(b) 21-50	(c) 51-100	(8) 1-YR ALW PER 100 EQUIP CNTGY	(9) DEPOT MAINT ALW PER 100 EQUIP	(10) ILLUSTRATION (a) FIG. NO.	(b) ITEM NO.
P2F R		VALVE ASSEMBLY: RANGE SELECTOR UXB4468 (61208)		EA	1	*	*	*	*	*	*	*	*	61	
X2F		PLUG, VALVE BODY M2080E (61208)		EA	1									61	1
P F	5330-258-7472	PACKING, PREFORMED: PLUG A2916DK (61208)		EA	1	*	*	*	*	*	*	*	*	61	2
P F		RING, RETAINING: SHAFT A2903W (61208)		EA	1	*	*	*	*	*	*	*	*	61	3
P F		KEY, WOODRUFF: SHAFT M2022M (61208)		EA	1	*	*	*	*	*	*	*	*	61	4
P F		SCREW, CAP, HEXAGON HEAD: HOUSING, 3/8-16 X 4 1/4 IN. LG M2002CK (61208)		EA	6	*	*	*	*	*	*	*	*	61	5
P H		WASHER, COPPER: HOUSING M201365 (61208)		EA	6				*	*	*	*	*	61	6
P H		GASKET: SELECTOR VALVE UA1485 (61208)		EA	1				*	*	*	*	*	61	7
P H		SCREW, CAP, SOCKET HEAD: PLATE, 3/8-16 X 1 1/2 IN. LG M1732W (61208)		EA	4				*	*	*	*	*	61	8
X2H		HOUSING, VALVE UB4170 (61208)		EA	1									61	9
P H		GASKET: SELECTOR VALVE UA1483 (61208)		EA	1				*	*	*	*	*	61	10
P H		PACKING, PREFORMED: SHAFT UA1879 (61208)		EA	1				*	*	*	*	*	61	11
P H		BEARING, BALL ANNULAR: SELECTOR M2167 (61208)		EA	1				*	*	*	*	*	61	12
P H		SCREW, CAP, SOCKET HEAD: DETENT PLATE, 3/8-16 X 1 IN. LG M1732J (61208)		EA	4				*	*	*	*	*	61	13
X2H		PLATE, COVER UB1441 (61208)		EA	1									61	14
X2H		PIN, ROLL: PLATE, 1/4 X 11/16 IN. LG M1927BN (61208)		EA	2									61	15
P H		PIN, ROLL: SELECTOR, 1/8 X 1 7/8 IN. M1927AH (61208)		EA	2				*	*	*	*	*	61	16
X2H		PLATE, DITCH P1212 (61208)		EA	1									61	17
X2H		PLATE, DETENT P1080 (61208)		EA	1									61	18
X2H		PLATE, BASE P1211 (61208)		EA	1									61	19
X2H		BALL, DETENT M1990E (61208)		EA	1									61	20
P H		SPRING, HELICAL: BALL UA2096 (61208)		EA	1				*	*	*	*	*	61	21
P H		WIPER, VALVE P1082 (61208)		EA	1				*	*	*	*	*	61	22
P H	5330-258-7479	PACKING, PREFORMED: WIPER A2916CB (61208)		EA	1				*	*	*	*	*	61	23
P H		WASHER, SPRING: WIPER P1128 (61208)		EA	10				*	*	*	*	*	61	24

(2) FEDERAL STOCK NUMBER	(3) DESCRIPTION REF NUMBER & MFR CODE	USABLE ON CODE	(4) UNIT OF MEAS	(5) QTY INC IN UNIT	(6) 30-DAY DS MAINT ALLOWANCE (a) 1-20	(b) 21-50	(c) 51-100	(7) 30-DAY GS MAINT ALLOWANCE (a) 1-20	(b) 21-50	(c) 51-100	(8) 1-YR ALW PER 100 EQUIP CNTGY	(9) DEPOT MAINT ALW PER 100 EQUIP	(10) ILLUSTRATION (a) FIG. NO.	(b) ITEM NO.
	PACKING, PREFORMED: PLATE UA3352 (61208)		EA	1				*	*	*	*	*	61	25
	BEARING, BALL: SHAFT P1210 (61208)		EA	1				*	*	*	*	*	61	26
	SHAFT, SELECTOR VALVE P1213 (61208)		EA	1									61	27
	PIN, STRAIGHT, HEADLESS: SELECTOR A2711AB (61208)		EA	1									61	28
	VALVE SELECTOR P1126 (61208)		EA	1									61	29
	GASKET, RING UA1481 (61208)		EA	1				*	*	*	*	*	61	
	PUMP ASSEMBLY, OIL UXC4467 (61208)		EA	1									62	
	SCREW, CAP, HEXAGON HEAD: PLATE MTG, 3/8-16 X 1 1/4 IN. LG M2002AA (61208)		EA	6	*	*	*	*	*	*	*	*	62	1
	BREATHER ASSEMBLY UA3742 (61208)		EA	1	*	*	*	*	*	*	*	*	62	2
	SCREW, CAP, HEXAGON HEAD: TUBE FLANGE UA4873 (61208)		EA	2	*	*	*	*	*	*	*	*	62	3
	WASHER, LOCK: TUBE FLANGE, 3/8 IN. IT UA4874 (61208)		EA	2	*	*	*	*	*	*	*	*	62	4
	TUBE ASSEMBLY: SUCTION UXC4851 (61208)		EA	1									62	5
	STRAINER: SUCTION TUBE UA4848 (61208)		EA	1	*	*	*	*	*	*	*	*	62	6
	BODY, STRAINER COVER UA4849 (61208)		EA	1									62	7
	COUPLING, SUCTION TUBE UA4828 (61208)		EA	1									62	8
	TUBE, SUCTION UA4827 (61208)		EA	1									62	9
	FLANGE, SUCTION TUBE UA4845 (61208)		EA	1									62	10
	PLATE, END UA4850 (61208)		EA	1									62	
	GASKET: TUBE FLANGE		EA	1									62	11
	RING, RETAINING: PUMP GEAR UA4872 (61208)		EA	1									62	12
	GEAR, DRIVEN: OIL PUMP UA4870 (61208)		EA	1									62	13
	KEY, WOODRUFF: PUMP GEAR UA4871 (61208)		EA	1	*	*	*	*	*	*	*	*	62	14
	SCREW, CAP, HEXAGON HEAD: PUMP MTG, 3/8-16 X 1.38 IN. LG M2002U (61208)		EA	4	*	*	*	*	*	*	*	*	62	15
5310-167-0721	WASHER, LOCK: PUMP MTG, 3/8 IN. IT		EA	4	*	*	*	*	*	*	*	*	62	16
	PUMP, HABOURN UXB4954 (61208)		EA	1	*	*	*	*	*	*	*	*	62	17
	PIN, SPRING: DOWEL M1927AK (61208)		EA	4									62	18

(1) SMR CODE	(2) FEDERAL STOCK NUMBER	(3) DESCRIPTION REF NUMBER & MFR CODE	USABLE ON CODE	(4) UNIT OF MEAS	(5) QTY INC IN UNIT	(6) 30-DAY DS MAINT ALLOWANCE (a) 1-20	(b) 21-50	(c) 51-100	(7) 30-DAY GS MAINT ALLOWANCE (a) 1-20	(b) 21-50	(c) 51-100	(8) 1-YR ALW PER 100 EQUIP CNTGY	(9) DEPOT MAINT ALW PER 100 EQUIP	(10) ILLUSTRATI (a) FIG. NO.	I
P F		GASKET: PUMP TO PLATE UA4808 (61208)		EA	2	*	*	*	*	*	*	*	*	62	
X1		PLATE UB4891 (61208)		EA	1									62	
P O		PLUG, PIPE, SQUARE HEAD: FILL PIPE, 1 1/2 IN. NPT 4510 (23382)		EA	1	*	*	*	*	*	*	*	*	63	
P O		COUPLING, PIPE, REDUCING: FILL PIPE, 1 1/2 X 1 IN. NPT 36978 (23382)		EA	1	*	*	*	*	*	*	*	*	63	
P O		NIPPLE, CLOSE: FILL PIPE, 1 IN. NPT 7446 (23382)		EA	2	*	*	*	*	*	*	*	*	63	
P O		ELBOW, PIPE: FILL PIPE, 45 DEG, 1 IN. NPT 2037 (23382)		EA	1	*	*	*	*	*	*	*	*	63	
P O		NIPPLE, PIPE: OIL FILL, 1 X 11 IN. LG 36513 (23382)		EA	1	*	*	*	*	*	*	*	*	63	
P O		ELBOW, PIPE: FILL PIPE, 1 IN. NPT, 90 DEG 7434 (23382)		EA	1	*	*	*	*	*	*	*	*	63	
P O		NIPPLE, CLOSE: FILL PIPE, 1 IN. NPT 7446 (23382)		EA	1	*	*	*	*	*	*	*	*	63	
P F		SCREW, CAP, HEXAGON HEAD: W/FIBRE WASHER, 1/2-13 X 3/4 IN. LG M2004A (61208)		EA	4	*	*	*	*	*	*	*	*	63	
X2F		SCREW, CAP, HEXAGON HEAD: COVER MTG, 5/8-11 X 13/16 IN. LG UB3301E (61208)		EA	2									63	9
X2F		PLATE, COVER UXA5083 (61208)		EA	1									63	10
P F		GASKET: PLATE UA1702 (61208)		EA	1	*	*	*	*	*	*	*	*	63	11
X20		PLUG, MACHINE: COVER PLATE, 1-12 THD SIZE M2080K (61208)		EA	1									63	12
P O		PACKING, PREFORMED: MACHINE PLUG, 1 IN. ID A2916DP (61208)		EA	1	*	*	*	*	*	*	*	*	63	13
X2F		SCREW, MACHINE: COVER MTG, NO. 10-24 X 3/4 IN. LG M2023D (61208)		EA	4									63	14
X2F		SCREW, CAP, HEXAGON HEAD: W/FIBRE WASHER COVER MTG, 1/2-13 X 3/4 IN. LG M2004A (61208)		EA	8									63	15
X2F		PLATE, COVER UXA4395 (61208)		EA	1									63	16
P F		GASKET: PLATE UA1469 (61208)		EA	1	*	*	*	*	*	*	*	*	63	17
X2F		PLUG, ADAPTER UA4392 (61208)		EA	1									63	18
P F		PACKING, PREFORMED: ADAPTER SEAL A2916BT (61208)		EA	1	*	*	*	*	*	*	*	*	63	19

(1) SMR CODE	(2) FEDERAL STOCK NUMBER	(3) DESCRIPTION REF NUMBER & MFR CODE	USABLE ON CODE	(4) UNIT OF MEAS	(5) QTY INC IN UNIT	(6) 30-DAY DS MAINT ALLOWANCE (a) 1-20	(b) 21-50	(c) 51-100	(7) 30-DAY GS MAINT ALLOWANCE (a) 1-20	(b) 21-50	(c) 51-100	(8) 1-YR ALW PER 100 EQUIP CNTGY	(9) DEPOT MAINT ALW PER 100 EQUIP	(10) ILLUSTRATION (a) FIG. NO.	(b) ITEM NO.
P F		SCREW, CAP, HEXAGON HEAD: CONNECTING PLATE, 3/8-16 X 1 1/4 IN. LG M2002AA (61208)		EA	6	*	*	*	*	*	*	*	*	63	20
X2H		PLATE, CONNECTION UC4378 (61208)		EA	1									63	21
P H		GASKET: PLATE UA4426 (61208)		EA	1				*	*	*	*	*	63	22
X2H		TUBE CONNECTOR: CONVERTER CLUTCH UA4379 (61208)		EA	1									63	23
P H		PACKING, PREFORMED: CONVERTER CLUTCH TUBE UA1482 (61208)		EA	2				*	*	*	*	*	63	24
P H		SCREW, CAP, SOCKET HEAD: COLLECTOR HOUSING, 3/8-16 X 1 IN. LG M1732J (61208)		EA	4				*	*	*	*	*	64	1
P H		SCREW, CAP, HEXAGON HEAD: COLLECTOR HOUSING, 3/8-16 X 1.38 IN. LG M2002U (61208)		EA	4				*	*	*	*	*	64	2
P H	5310-167-0721	WASHER LOCK: COLLECTOR HOUSING, 3/8 IN. IT		EA	4				*	*	*	*	*	64	3
X2H		HOUSING ASSEMBLY, COLLECTOR UXB4436 (61208)		EA	1									64	4
X20		PLUG, MACHINE, HEXAGON HEAD: HOUSING, 1-12 THD SIZE M2080K (61208)		EA	3									64	5
P O		PACKING, PREFORMED: MACHINE PLUG, 1 IN. ID A2916DP (61208)		EA	3	*	*	*	*	*	*	*	*	64	6
X20		PLUG, PIPE, SOCKET HEAD: COLLECTOR HOUSING, 3/8-18 NPT M2051S (61208)		EA	7									64	7
P H		GASKET: HOUSING UB1484 (61208)		EA	1				*	*	*	*	*	64	8
X2H		TUBE, MAIN UA1476 (61208)		EA	2									64	9
P H		PACKING, PREFORMED: TRANSMISSION TUBES UA1482 (61208)		EA	4				*	*	*	*	*	64	10
P H		RING, RETAINING: BEARING A2952E (61208)		EA	1				*	*	*	*	*	64	11
P H		BEARING ASSEMBLY, ROLLER: OUTPUT FLANGE UA2043 (61208)		EA	1				*	*	*	*	*	64	12
P H		SEAL, OUTPUT FLANGE UA1488 (61208)		EA	1				*	*	*	*	*	64	13
X2H		FLANGE, OUTPUT UB1614 (61208)		EA	1									64	14
X2H		SCREW, CAP, HEXAGON HEAD: ACCESS PLATE MTG, 1/4-20 X 3/4 IN. LG M2002AG (61208)		EA	6									65	1
X2H		PLATE, COVER: ACCESS UA4701 (61208)		EA	1									65	2
P H		GASKET: COVER PLATE UA4702 (61208)		EA	1				*	*	*	*	*	65	3

(1) SMR CODE	(2) FEDERAL STOCK NUMBER	(3) DESCRIPTION REF NUMBER & MFR CODE	USABLE ON CODE	(4) UNIT OF MEAS	(5) QTY INC IN UNIT	(6) 30-DAY OS MAINT ALLOWANCE (a) 1-20	(b) 21-50	(c) 51-100	(7) 30-DAY GS MAINT ALLOWANCE (a) 1-20	(b) 21-50	(c) 51-100	(8) 1-YR ALW PER 100 EQUIP CNTGY	(9) DEPOT MAINT ALW PER 100 EQUIP	(10) ILLUSTRATION (a) FIG. NO.	(b) ITEM NO.
P H		NUT, PLAIN, HEXAGON: CONVERTER DRIVE STUD, 3/8-24 THD SIZE		EA	12				*	*	*	*	*	65	4
P H		SCREW, CAP, SOCKET HEAD: HOUSING MTG, 3/8-16 X 1 IN. LG M1732J (61208)		EA	12				*	*	*	*	*	65	5
P H		GASKET: MAIN HOUSING UC1548 (61208)		EA	1				*	*	*	*	*	65	6
P H	5305-269-2805	SCREW, CAP, HEXAGON HEAD: ADAPTER MTG, 3/8-16 X 1 1/4 IN. MS90726-62 (96906)		EA	12				*	*	*	*	*	65	7
P H	5310-018-7123	WASHER, LOCK: ADAPTER MTG, 3/8 IN. 4313 (23382)		EA	12				*	*	*	*	*	65	8
X2H		SCREW, CAP, HEXAGON HEAD: HOUSING ADAPTOR, 3/8-16 X 3/4 IN. LG M2000E (61208)		EA	1									65	9
X2H		PLUG, OIL DRAIN M2080F (61208)		EA	1									65	10
P H	5330-258-7471	PACKING, PREFORMED: DRAIN PLUG A2916DH (61208)		EA	1				*	*	*	*	*	65	11
X2H		ADAPTER, DEEP: SUMP UD46832 (61208)		EA	1									65	12
P H	2520-570-8729	SEAL, CONVERTER M2347 (61208)		EA	1				*	*	*	*	*	65	13
P H		STUD, PLAIN: CONVERTER DRIVE, 3/8 X 1 1/2 IN. LG 165016 (23382)		EA	12				*	*	*	*	*	65	14
P H		SCREW, CAP, HEXAGON HEAD: CONNECTOR BLOCK MTG, 3/8-16 X 1.38 IN. LG M2002U (61208)		EA	2				*	*	*	*	*	65	15
P H		WASHER, LOCK: CONNECTING BLOCK MTG, 3/8 IN. IT M2046S (61208)		EA	2				*	*	*	*	*	65	16
X2H		BLOCK ASSEMBLY: CONNECTING UXA1474 (61208)		EA	1									65	17
X2H		TUBE, CONNECTING: BLOCK UA1477 (61208)		EA	1									65	18
P H		PACKING, PREFORMED: CONVERTER TUBE A2916BL (61208)		EA	4				*	*	*	*	*	65	19
X2H		TUBE, CONNECTING: BLOCK UA1478 (61208)		EA	2									65	20
P H		PACKING, PREFORMED: CONVERTER TUBE UA1482 (61208)		EA	4				*	*	*	*	*	65	21
X2H		TUBE, CONVERTER UA1475 (61208)		EA	2									65	22
P H		PACKING, PREFORMED: CONVERTER TUBE A2916BL (61208)		EA	2				*	*	*	*	*	65	23
X2H		DRIVE ASSEMBLY, ACCESSORY UXC4589 (61208)		EA	1									66	
P H		SHAFT ASSEMBLY UA2031 (61208)		EA	1				*	*	*	*	*	66	1
X2H		SCREW, CAP, SOCKET HEAD: DRIVE MTG UA2028 (61208)		EA	3									66	2

(1) SMR CODE	(2) FEDERAL STOCK NUMBER	(3) DESCRIPTION REF NUMBER & MFR CODE	USABLE ON CODE	(4) UNIT OF MEAS	(5) QTY INC IN UNIT	(6) 30-DAY OS MAINT ALLOWANCE (a) 1-20	(b) 21-50	(c) 51-100	(7) 30-DAY GS MAINT ALLOWANCE (a) 1-20	(b) 21-50	(c) 51-100	(8) 1-YR ALW PER 100 EQUIP CNTGY	(9) DEPOT MAINT ALW PER 100 EQUIP	(10) ILLUSTRATION (a) FIG. NO.	(b) ITEM NO.
P H		DRIVE, TACHOMETER UA2026 (61208)		EA	1				*	*	*	*	*	66	3
X2H		SCREW, CAP, SOCKET HEAD: PLATE MTG, M1731AF (61208)		EA	4									66	4
X2H		PLATE, MOUNTING UA3962 (61208)		EA	1									66	5
P H		SHIM SET: ADJUSTING UA2356AD (61208)		EA	1				*	*	*	*	*	66	6
X2H		SCREW, MACHINE (SPECIAL) UA2029 (61208)		EA	1									66	7
X2H		NUT, LOCK: DRIVE SCREW M2027S (61208)		EA	1									66	8
P H		DRIVE ASSEMBLY: TIGHT ANGLE UA2032 (61208)		EA	1				*	*	*	*	*	66	9
P H	4730-050-4208	FITTING, LUBRICATION: DRIVE 1/16 IN. NPT MS15003-1 (96906)		EA	1				*	*	*	*	*	66	10
X2H		CLUTCH ASSEMBLY, FORWARD UXB4576 (61208) (SAME AS CLUTCH ASSY, P/N UXB4577 (61208), EXCEPT WHERE ANNOTATED)		EA	1									67	
X2H		CLUTCH ASSEMBLY, REVERSE UXB4577 (61208)		EA	1									67	
P H		RING, PISTON M1904BJ (61208)		EA	6				*	*	*	*	*	67	1
P H		RING, RETAINING: BEARING A2903M (61208)		EA	2				*	*	*	*	*	67	2
P H		BEARING, ROLLER UA2055 (61208)		EA	2				*	*	*	*	*	67	3
P H		SPACER, BEARING UA2022 (61208)		EA	2				*	*	*	*	*	67	4
P H		WASHER, THRUST P1193 (61208)		EA	6				*	*	*	*	*	67	5
X2H		GEAR AND BUSHING ASSEMBLY UXB4563 (61208)		EA	2									67	6
X2H		GEAR, LOW UB4554 (61208)		EA	2									67	
P H		BUSHING, GEAR M2073AE (61208)		EA	2				*	*	*	*	*	67	
X2H		RACE, THRUST UA2044 (61208)		EA	6									67	7
X2H		RING, RETAINING: BEARING A2903S (61208)		EA	2									67	8
P H	3110-554-5967	BEARING, BALL, ANNULAR M172 (61208) (USED ONLY WITH CLUTCH ASSY, P/N UXB4577 (61208))		EA	2				*	*	*	*	*	67	9
X2H		RACE, THRUST UA2044 (61208)		EA	4									67	10
P H		WASHER, THRUST P1193 (61208)		EA	8				*	*	*	*	*	67	11
X2H		GEAR AND BUSHING ASSEMBLY UXB4564 (61208)		EA	2									67	12

(1) SMR CODE	(2) FEDERAL STOCK NUMBER	(3) DESCRIPTION REF NUMBER & MFR CODE	USABLE ON CODE	(4) UNIT OF MEAS	(5) QTY INC IN UNIT	(6) 30-DAY DS MAINT ALLOWANCE (a) 1-20	(b) 21-50	(c) 51-100	(7) 30-DAY GS MAINT ALLOWANCE (a) 1-20	(b) 21-50	(c) 51-100	(8) 1-YR ALW PER 100 EQUIP CNTGY	(9) DEPOT MAINT ALW PER 100 EQUIP	(10) ILLUSTRATION (a) FIG. NO.	(b) ITEM NO.
X2H		GEAR, HIGH UB4555 (61208)		EA	2									67	
P H		BUSHING, GEAR M2073AF (61208)		EA	2				*	*	*	*	*	67	
X2H		RING, RETAINING: PLATE A2669BY (61208)		EA	8									67	13
P H		PLATE, CLUTCH UA2454 (61208)		EA	4				*	*	*	*	*	67	14
P H		PLATE, DRIVING A4480B (61208)		EA	24				*	*	*	*	*	67	15
P H		PLATE, DRIVEN A4481A (61208)		EA	20				*	*	*	*	*	67	16
P H		SCREW, CAP, HEXAGON HEAD: PISTON UA2021 (61208)		EA	6				*	*	*	*	*	67	17
P H		NUT, SLOTTED, HEXAGON: PISTON, 3/8-24 THD SIZE M2060E (61208)		EA	24				*	*	*	*	*	67	18
P H		PISTON, CLUTCH UB2455 (61208)		EA	4				*	*	*	*	*	67	19
P H	2010-937-5496	RING, PISTON M1904E (61208)		EA	4				*	*	*	*	*	67	20
P H		RING, TEFLON M2746K (61208)		EA	4				*	*	*	*	*	67	21
P H		SPRING, PISTON RETURN UA1899 (61208)		EA	12				*	*	*	*	*	67	22
X2H		WASHER, SPRING A2888AH (61208)		EA	12									67	23
P H		RETAINER, GEAR 202299 (61208)		EA	6				*	*	*	*	*	67	24
X2H		RING, RETAINING: SPIDER A2669BY (61208)		EA	4									67	25
X2H		SCREW, CAP, HEXAGON HEAD: SPIDER MTG, M2002C (61208)		EA	18									67	26
X2H		SPIDER, CLUTCH UB4559 (61208) (USED ONLY WITH CLUTCH ASSY, P/N UXB4577 (61208))		EA	1									67	27
X2H		SPIDER, CLUTCH UB4558 (61208) (USED ONLY WITH CLUTCH ASSY, P/N UXB4576 (61208))		EA	1									67	27
X2H		SPIDER, CLUTCH UB4560 (61208)		EA	2									67	28
P H		RING, RETAINING: GEAR A2622W (61208)		EA	2				*	*	*	*	*	67	29
X2H		GEAR, REVERSE, INPUT 206309 (61208)		EA	2									67	30
X2H		PLUG, ORIFICE P1187 (61208) (USED ONLY WITH CLUTCH ASSY, P/N UXB4576 (61208))		EA	1									67	31
P H		PLUG, PIPE: SHAFT, 1/8 IN. NPT M2051F (61208)		EA	4				*	*	*	*	*	67	32

	NUMBER	REF NUMBER & MFR CODE	SOURCE ON CODE	UNIT OF MEAS	INC IN UNIT	1-20	21-50	51-100	1-20	21-50	51-100	EQUIP CNTGY	100 EQUIP	FIG. NO.	ITEM NO.
X2H		SHAFT, CLUTCH UB4556 (61208) (USED ONLY WITH CLUTCH ASSY, P/N UXB4576 (61208))		EA	1									67	33
X2H		SHAFT, CLUTCH UB4557 (61208) (USED ONLY WITH CLUTCH ASSY, P/N UXB4577 (61208))		EA	1									67	33
X1		CONVERTER ASSEMBLY 8FLW1307 (61208)		EA	1									68	
P H		SCREW, CAP, SOCKET HEAD: CARRIER GUIDE, 3/8-16 X 1 1/2 IN. LG M1732W (61208)		EA	6				*	*	*	*	*	68	1
P H		NUT, PLAIN, HEXAGON: CARRIER GUIDE, 1/2-20 THD SIZE M2027AB (61208)		EA	6				*	*	*	*	*	68	2
P H		WASHER, SUPPORT 2036768 (61208)		EA	1				*	*	*	*	*	68	3
P H		PLATE, DRIVE UB4438 (61208)		EA	3				*	*	*	*	*	68	4
P H		SHIM, PLATE 203684A (61208)		EA	V				*	*	*	*	*	68	5
X2H		PILOT, FLYWHEEL UB4421 (61208)		EA	1									68	6
P H		PACKING, PREFORMED: PILOT A2916CT (61208)		EA	1				*	*	*	*	*	68	7
P H		SCREW, CAP, HEXAGON HEAD: HOUSING, 5/8-18 X 1 IN. LG M2006D (61208)		EA	1				*	*	*	*	*	68	8
X2H		PLATE, CLAMP B1504AP (61208)		EA	1									68	9
X2H		PIN, ROLL: PLATE M1927AM (61208)		EA	1									68	10
P H		PACKING, PREFORMED: PLATE A2916CV (61208)		EA	1				*	*	*	*	*	68	11
X2H		RING, RETAINING: BEARING M201213A (61208)		EA	1									68	12
P H		SCREW, CAP, HEXAGON HEAD: IMPELLER, 5/16-18 X 0.87 IN. LG M2001H (61208)		EA	24				*	*	*	*	*	68	13
P H		WASHER, FLAT: IMPELLER, 5/16 IN. A2888AW (61208)		EA	24				*	*	*	*	*	68	14
P2H		HOUSING, ROTATING 208882D (61208)		EA	1				*	*	*	*	*	68	15
P H		PLUG, PIPE: HOUSING 1/8 IN. NPT M2051F (61208)		EA	2				*	*	*	*	*	68	16
P H		STUD, PLAIN: HOUSING, 1/2 X 1 3/4 IN. LG A2695AL (61208)		EA	6				*	*	*	*	*	68	17
P H		GASKET, RING M20740 (61208)		EA	1				*	*	*	*	*	68	18
P H		RING, RETAINING M201213L (61208)		EA	1				*	*	*	*	*	68	19
X2H		PLATE, BACKING 206184 (61208)		EA	1									68	20

(1) SMR CODE	(2) FEDERAL STOCK NUMBER	(3) DESCRIPTION REF NUMBER & MFR CODE	USABLE ON CODE	(4) UNIT OF MEAS	(5) QTY INC IN UNIT	(6) 30-DAY OS MAINT ALLOWANCE (a) 1-20	(b) 21-50	(c) 51-100	(7) 30-DAY GS MAINT ALLOWANCE (a) 1-20	(b) 21-50	(c) 51-100	(8) 1-YR ALW PER 100 EQUIP CNTGY	(9) DEPOT MAINT ALW PER 100 EQUIP	(10) ILLUSTRATIO (a) FIG. NO.
P H		CLUTCH ASSEMBLY, PLATE X206194B (61208)		EA	1				*	*	*	*	*	68
X1		RIVET M2015U (61208)		EA	8									68
X1		PLATE 206194B (61208)		EA	1									68
X1		HUB 203887 (61208)		EA	1									68
P H		SCREW, CAP, HEXAGON HEAD; HOUSING, 3/8-16 X 1 1/4 IN. LG M2002AA (61208)		EA	4				*	*	*	*	*	68
P H		WASHER, COPPER: HOUSING, 3/8 IN. M201365 (61208)		EA	4				*	*	*	*	*	68
P H		CARRIER, BEARING 203785A (61208)		EA	1				*	*	*	*	*	68
P H	3110-516-5491	BEARING, BALL, ANNULAR: CARRIER M2294 (61208)		EA	1				*	*	*	*	*	68
P H		PACKING, PREFORMED: CARRIER M201399AN (61208)		EA	1				*	*	*	*	*	68
X2H		CLUTCH ASSEMBLY, PISTON X206192A (61208)		EA	1									68
X1		RIVET M2011X (61208)		EA	6									68
X1		RETAINER 203787A (61208)		EA	1									68
X1		PIN 202233A (61208)		EA	3									68
X1		SPRING, RETURN 206193A (61208)		EA	1									68
P H		PACKING, PREFORMED A2916BD (61208)		EA	1				*	*	*	*	*	68
X1		PISTON 206192A (61208)		EA	1									68
P H	2520-487-2904	RING, OIL SEAL M2059D (61208)		EA	1				*	*	*	*	*	68
P H		RING, PISTON M1904X (61208)		EA	1				*	*	*	*	*	68
P H		WHEEL ASSEMBLY, TURBINE X208884 (61208)		EA	1				*	*	*	*	*	68
X2H		PIN, ROLL M1927T (61208)		EA	4									68
P H		WASHER, THRUST 202451 (61208)		EA	1				*	*	*	*	*	68
X2H		RIVET, TURBINE WHEEL M2016N (61208)		EA	16									68
X2H		WHEEL, TURBINE 208884 (61208)		EA	1									68
X2H		HUB, TURBINE WHEEL 206185 (61208)		EA	1									68
P H		RING, RETAINING A2669CH (61208)		EA	1				*	*	*	*	*	68
X2H		GUIDE, WHEEL 208887 (61208)		EA	1									68

(1) SMR CODE	(2) FEDERAL STOCK NUMBER	(3) DESCRIPTION REF NUMBER & MFR CODE	USABLE ON CODE	(4) UNIT OF MEAS	(5) QTY INC IN UNIT	(6) 30-DAY OS MAINT ALLOWANCE (a) 1-20	(b) 21-50	(c) 51-100	(7) 30-DAY GS MAINT ALLOWANCE (a) 1-20	(b) 21-50	(c) 51-100	(8) 1-YR ALW PER 100 EQUIP CNTGY	(9) DEPOT MAINT ALW PER 100 EQUIP	(10) ILLUSTRATION (a) FIG. NO.	(b) ITEM NO.
P H	6365-350-6643	RING, RETAINING A2669HV (61208)		EA	2				*	*	*	*	*	68	33
P H		RACE, INNER: FREE WHEEL 206187A (61208)		EA	1				*	*	*	*	*	68	34
P H		WASHER, THRUST 203803 (61208)		EA	1				*	*	*	*	*	68	35
X2H		CAGE, FREE WHEEL 206195A (61208)		EA	1									68	36
P H		SPRING, FREE WHEEL 201340DE (61208)		EA	2				*	*	*	*	*	68	37
X2H		PIN, ROLL M1927AT (61208)		EA	4									68	38
P H		ROLLER, FREE WHEEL 202234B (61208)		EA	14				*	*	*	*	*	68	39
X2H		CAM, FREE WHEEL 208894 (61208)		EA	1									68	40
P H		BEARING, NEEDLE: THRUST M2531 (61208)		EA	1				*	*	*	*	*	68	41
P H		SCREW, CAP, HEXAGON HEAD: CLAMP PLATE, 5/16-24 X 3/4 IN. LG M2001K (61208)		EA	8				*	*	*	*	*	68	42
X2H		PLATE, CLAMP 201951 (61208)		EA	2									68	43
X2H		WHEEL, IMPELLER 208886B (61208)		EA	1									68	44
P H		PACKING, PREFORMED: GEAR A2916AV (61208)		EA	1				*	*	*	*	*	68	45
X2H		GEAR, PUMP DRIVE 206409 (61208)		EA	1									68	46
X2H		RING, PISTON M1904U (61208)		EA	1									68	47
P H		BUSHING, BRONZE 201821 (61208)		EA	1				*	*	*	*	*	68	48
X2H		GUIDE, CARRIER UC4372 (61208)		EA	1									68	49
P H	2520-487-3014	RING, PISTON M1904J (61208)		EA	2				*	*	*	*	*	68	50
P. H	5340-248-3159	RING, RETAINING M2293 (61208)		EA	1				*	*	*	*	*	68	51
P2H		SHAFT, OUTPUT UB4382 (61208)		EA	1				*	*	*	*	*	68	53
X2H		SHAFT ASSEMBLY, OUTPUT UXB4473 (61208)		EA	1									69	
P H		CUP, BEARING UA3957 (61208)		EA	1				*	*	*	*	*	69	1
P H		CONE, BEARING 30307AJP (61208)		EA	1				*	*	*	*	*	69	2
P H		RING, SEAL: RUBBER M2074X (61208)		EA	1				*	*	*	*	*	69	3
X2H		GEAR, OUTPUT, LOW UB2008 (61208)		EA	1									69	4
P H		RING, RETAINING A2622W (61208)		EA	3				*	*	*	*	*	69	5
X2H		GEAR, OUTPUT, HIGH UB1561 (61208)		EA	1									69	6

(1) SMR CODE	(2) FEDERAL STOCK NUMBER	(3) DESCRIPTION REF NUMBER & MFR CODE	USABLE ON CODE	(4) UNIT OF MEAS	(5) QTY INC IN UNIT	(6) 30-DAY OS MAINT ALLOWANCE (a) 1-20	(b) 21-50	(c) 51-100	(7) 30-DAY GS MAINT ALLOWANCE (a) 1-20	(b) 21-50	(c) 51-100	(8) 1-YR ALW PER 100 EQUIP CNTGY	(9) DEPOT MAINT ALW PER 100 EQUIP	(10) ILLUSTRATION (a) FIG. NO.	(b) ITEM NO.
X2H		SHAFT, OUTPUT UB3954 (61208)		EA	1									69	7
X20		PLUG, PIPE: OIL DRAIN, 3/4 IN. NPT M2051AH (61208)		EA	1									70	1
P O	4730-246-9218	ELBOW, PIPE: OIL DRAIN, 3/4 IN. NPT WWP521TYPE1 (81349)		EA	2	*	*	*	*	*	*	*	*	70	2
X20		PLUG, ADAPTER: OIL DRAIN UXA4912 (61208)		EA	1									70	3
P O	5330-258-7471	PACKING, PREFORMED: DRAIN PLUG ADAPTER, 1 3/16 IN. ID 1 3/8 IN. OD A29160H (61208)		EA	1	*	*	*	*	*	*	*	*	70	4
P O		DIPSTICK, TRANSMISSION UA5079 (61208)		EA	1	*	*	*	*	*	*	*	*	70	5
X20		SCREW, DIPSTICK: MAIN HOUSING (SPECIAL) UA5078 (61208)		EA	1									70	6
P F		SCREW, DRIVE: INSTRUCTION PLATE M422 (61208)		EA	8	*	*	*	*	*	*	*	*	70	7
X2F		PLATE, INSTRUCTION UA1674 (61208)		EA	1									70	8
P F	5310-044-4153	SCREW, CAP, HEXAGON HEAD: MAIN HOUSING, 1/2-13 X 1 IN. LG		EA	1	*	*	*	*	*	*	*	*	70	9
P F	5310-205-8331	WASHER, FLAT: MAIN HOUSING, 1/2 IN.		EA	1	*	*	*	*	*	*	*	*	70	10
X20		PLUG, OIL LEVEL M2080F (61208)		EA	2									70	11
P O	5330-258-7471	PACKING, PREFORMED: OIL LEVEL PLUG A29160H (61208)		EA	2	*	*	*	*	*	*	*	*	70	12
X2H		SCREW, CAP, HEXAGON HEAD: BEARING RETAINER, 3/8-16 X 3/4 IN. LG M2000E (61208)		EA	2									70	13
P H		WASHER, LOCK: BEARING RETAINER, 3/8 IN. IT M2046S (61208)		EA	2				*	*	*	*	*	70	14
X2H		RETAINER UA2354 (61208)		EA	1									70	15
P H	5305-882-8257	SCREW, CAP, HEXAGON HEAD: BEARING CARRIER, 3/8-16 X 1 1/2 IN. LG		EA	6				*	*	*	*	*	70	16
P H		WASHER, LOCK: BEARING CARRIER, 3/8 IN. IT M2046S (61208)		EA	8				*	*	*	*	*	70	17
X2H		CARRIER, BEARING UC1451 (61208)		EA	1									70	18
X2H		TUBE ASSEMBLY: OIL RETURN P1075 (61208)		EA	1									70	19
P H	5310-985-4188	NUT, PLAIN, HEXAGON: RETURN TUBE 1/2-20 THD SIZE		EA	1				*	*	*	*	*	70	20
X2H		PIN, STRAIGHT, HEADLESS: DOWEL P1104 (61208)		EA	2									70	21
X2H		HOUSING, MAIN U04434 (61208)		EA	1									70	22
P F		NUT, PLAIN, HEXAGON: TRANSMISSION MTG, 1/2-13 THD SIZE 30322 (23382)		EA	12	*	*	*	*	*	*	*	*	70	
P F		WASHER, SPECIAL: TRANSMISSION MTG 199277(23382)		EA	12	*	*	*	*	*	*	*	*	70	

(1)	(2) FEDERAL STOCK NUMBER	(3) DESCRIPTION REF NUMBER & MFR CODE	USABLE ON CODE	(4) UNIT OF MEAS	(5) QTY INC IN UNIT	(6) 30-DAY OS MAINT ALLOWANCE (a) 1-20	(b) 21-50	(c) 51-100	(7) 30-DAY GS MAINT ALLOWANCE (a) 1-20	(b) 21-50	(c) 51-100	(8) 1-YR ALW PER 100 EQUIP CNTGY	(9) DEPOT MAINT ALW PER 100 EQUIP	(10) ILLUSTRATION (a) FIG. NO.	(b) ITEM NO.
		GROUP 15 - ALTERNATOR													
		BELT SET: ALTERNATOR DRIVE 12X40X36DEG (24161) (MATCHED SET OF 2)		EA	1	*	*	*	*	*	*	*	*	71	1
	5310-975-2075	NUT, PLAIN, HEXAGON: ADJUSTING STRAP, 3/8-24 THD SIZE MS35691-21 (96906)		EA	1	*	*	*	*	*	*	*	*	71	2
	5310-959-4675	WASHER, LOCK ADJUSTING STRAP, 3/8 IN. MS35340-46 (96906)		EA	2	*	*	*	*	*	*	*	*	71	3
	5305-269-2803	SCREW, CAP, HEXAGON HEAD: ADJUSTING STRAP, 3/8-24 X 1 IN. LG MS90726-60 (96906)		EA	1	*	*	*	*	*	*	*	*	71	4
	5305-012-0233	SCREW, CAP, HEXAGON HEAD: ADJUSTING STRAP, 3/8-16 X IN. LG 4011 (23382)		EA	1	*	*	*	*	*	*	*	*	71	5
		WASHER, FLAT: ADJUSTING STRAP, 3/8 IN. 4402 (23382)		EA	1	*	*	*	*	*	*	*	*	71	6
		STRAP, ALTERNATOR ADJUSTING 334496 (23382)		EA	1									71	7
	5305-269-3211	SCREW, CAP, HEXAGON HEAD: BRACKET MTG, 3/8-16 X 1 IN. LG		EA	3	*	*	*	*	*	*	*	*	71	8
	5310-018-7123	WASHER, LOCK BRACKET MTG, 3/8 IN. 4313 (23382)		EA	3	*	*	*	*	*	*	*	*	71	9
	5310-012-0370	NUT, PLAIN, HEXAGON: ALTERNATOR MTG, 7/16-20 THD SIZE		EA	2	*	*	*	*	*	*	*	*	71	10
	5310-209-6074	WASHER, LOCK: ALTERNATOR MTG, 7/16 IN.		EA	2	*	*	*	*	*	*	*	*	71	11
	5310-286-8455	WASHER, FLAT: ALTERNATOR MTG, 7/16 IN.		EA	1	*	*	*	*	*	*	*	*	71	12
	5305-709-8539	SCREW, CAP, HEXAGON HEAD: ALTERNATOR MTG, 7/16-20 X 1 3/4 IN. LG		EA	1	*	*	*	*	*	*	*	*	71	13
	5305-710-4194	SCREW, CAP, HEXAGON HEAD: ALTERNATOR MTG, 7/16-20 X 1 1/2 IN. LG		EA	1	*	*	*	*	*	*	*	*	71	14
		BRACKET, ALTERNATOR MTG 5127131 (72582)		EA	1									71	15
	5305-637-1455	SCREW, MACHINE: TERMINAL LUG, NO. 12-28 X 7/16 IN. LG		EA	2	*	*	*	*	*	*	*	*	71	16
	5310-550-3722	WASHER, LOCK: TERMINAL LUG, NO. 12		EA	2	*	*	*	*	*	*	*	*	71	17
		LUG, TERMINAL 10100020 (23382)		EA	1	*	*	*	*	*	*	*	*	71	18
		PULLEY, DRIVE 330643 (23382)		EA	1	*	*	*	*	*	*	*	*	71	19
		KEY, WOODRUFF: DRIVE PULLEY MTG		EA	1	*	*	*	*	*	*	*	*	71	20
		NUT, PLAIN, HEXAGON: RELAY MTG, 5/16-18 THD SIZE 4217 (23382)		EA	2	*	*	*	*	*	*	*	*	71	21
		WASHER, LOCK: RELAY MTG, 5/16 IN. 4318 (23382)		EA	2	*	*	*	*	*	*	*	*	71	22

(1) SMR CODE	(2) FEDERAL STOCK NUMBER	(3) DESCRIPTION REF NUMBER & MFR CODE	USABLE ON CODE	(4) UNIT OF MEAS	(5) QTY INC IN UNIT	(6) 30-DAY DS MAINT ALLOWANCE (a) 1-20	(b) 21-50	(c) 51-100	(7) 30-DAY GS MAINT ALLOWANCE (a) 1-20	(b) 21-50	(c) 51-100	(8) 1-YR ALW PER 100 EQUIP CNTGY	(9) DEPOT MAINT ALW PER 100 EQUIP	(10) ILLUSTRATION (a) FIG. NO.	(b) ITEM NO.
P O		BOLT, MACHINE: RELAY MTG, 5/16-18 X 3 3/4 IN.LG 5856 (23382)		EA	2	*	*	*	*	*	*	*	*	71	23
P O	2920-728-7692	RELAY, ALTERNATOR XR3544A (35510)		EA	1	*	*	*	*	*	*	*	*	71	24
P F R	2920-909-2483	ALTERNATOR ASSEMBLY 10929868 (00000)		EA	1	*	*	*	*	*	*	*	*	71	25
P F	5310-920-0652	NUT, LOCK: PULLEY MTG, 5/8-18 HD SIZE THD 60136 (35510)		EA	1	*	*	*	*	*	*	*	*	71	26
P F	5310-920-0831	WASHER, FLAT: PULLEY MTG 22082 (35510)		EA	1	*	*	*	*	*	*	*	*	71	27
P F	5305-970-4114	SCREW, CAP, SOCKET HEAD: HOUSING MTG, 1/4-20 X 1 1/8 IN. LG 60023 (35510)		EA	6	*	*	*	*	*	*	*	*	72	1
P F		SCREW, CAP, SOCKET HEAD: HOUSING 60087 (35510)		EA	4	*	*	*	*	*	*	*	*	72	2
P F	5310-775-5189	NUT, PLAIN, HEXAGON: REGULATOR MTG 2313 (35510)		EA	1	*	*	*	*	*	*	*	*	72	3
P F	5310-361-9897	WASHER, GUARD: REGULATOR MTG 2385 (35510)		EA	4	*	*	*	*	*	*	*	*	72	4
P F	2920-928-6144	REGULATOR ASSEMBLY, VOLTAGE 60177 (35510)		EA	1	*	*	*	*	*	*	*	*	72	5
P F	2920-788-3618	PACKING, PREFORMED: AND HOUSING 60020 (35510)		EA	1	*	*	*	*	*	*	*	*	72	6
P F	2920-788-3619	BEARING, BALL: ROTOR SHAFT 60008 (35510)		EA	1	*	*	*	*	*	*	*	*	72	7
P F	5330-823-4882	PACKING, PREFORMED: SHAFT SEAL 60199 (35510)		EA	1	*	*	*	*	*	*	*	*	72	8
X1		SPACER 60272 (35510)		EA	1									72	9
P F		PLUG, PIPE: END HOUSING, 1/4-18 THD SIZE 60263 (35510)		EA	1	*	*	*	*	*	*	*	*	72	10
P F		SCREW, MACHINE: COVER MTG 60143 (35510)		EA	2	*	*	*	*	*	*	*	*	72	11
P F	5310-920-0661	WASHER, LOCK: COVER MTG, NO. 6 60142 (35510)		EA	2	*	*	*	*	*	*	*	*	72	12
X1		COVER PLATE 60145 (35510)		EA	1									72	13
P F	2920-788-3620	GASKET, COVER PLATE 60144 (35510)		EA	1	*	*	*	*	*	*	*	*	72	14
X1		SPACER 60225 (35510)		EA	1									72	15
X1		HOUSING 60191 (35510)		EA	1									72	16
P F	5305-084-6192	SCREW, MACHINE: BRUSH HOLDER MTG, NO. 8-32 X 7/16 IN. LG 13622 (35510)		EA	2	*	*	*	*	*	*	*	*	72	17
P F	5310-827-4978	WASHER, GUARD: BRUSH HOLDER MTG 13624 (35510)		EA	2	*	*	*	*	*	*	*	*	72	18

(1) SMR CODE	(2) FEDERAL STOCK NUMBER	(3) DESCRIPTION REF NUMBER & MFR CODE	USABLE ON CODE	(4) UNIT OF MEAS	(5) QTY INC IN UNIT	(6) 30-DAY DS MAINT ALLOWANCE (a) 1-20	(b) 21-50	(c) 51-100	(7) 30-DAY GS MAINT ALLOWANCE (a) 1-20	(b) 21-50	(c) 51-100	(8) 1-YR ALW PER 100 EQUIP CNTGY	(9) DEPOT MAINT ALW PER 100 EQUIP	(10) ILLUSTRATION (a) FIG. NO.	(b) ITEM NO.
F	5310-045-3299	WASHER, LOCK: BRUSH HOLDER MTG 36895 (35510)		EA	2	*	*	*	*	*	*	*	*	72	19
F	5977-997-9766	HOLDER, BRUSH 60174 (35510)		EA	1	*	*	*	*	*	*	*	*	72	20
F	2920-928-6147	BRUSH, CONTACT: ELECTRICAL 74629 (35510)		EA	2	*	*	*	*	*	*	*	*	72	21
F		SCREW, MACHINE: FLAT HEAD FAN MTG, 1/4-20 X 3/4 IN. LG 60253 (35510)		EA	1	*	*	*	*	*	*	*	*	72	22
F		WASHER, FLAT: FAN MTG, 1/4 IN. 60254 (35510)		EA	1	*	*	*	*	*	*	*	*	72	23
F	5330-823-4920	SLEEVE, SEAL: COUPLER 60202 (35510)		EA	1	*	*	*	*	*	*	*	*	72	24
F	2930-928-6148	FAN AND HUB ASSEMBLY 60196 (35510)		EA	1	*	*	*	*	*	*	*	*	72	25
F	2920-069-8996	KEY, MACHINE: FAN MTG 60249 (35510)		EA	1	*	*	*	*	*	*	*	*	72	26
F	5305-728-8318	SCREW, CAP, SOCKET HEAD: END HOUSING 60022 (35510)		EA	6	*	*	*	*	*	*	*	*	72	27
1		HOUSING 60173 (35510)		EA	1									72	28
F	5330-823-4919	SEAL, TEFLON LID 60186 (35510)		EA	3	*	*	*	*	*	*	*	*	72	29
F	5330-823-4881	PACKING, PREFORMED: SHAFT SEAL 60198 (35510)		EA	1	*	*	*	*	*	*	*	*	72	30
F	5330-823-4883	PACKING, PREFORMED: SHAFT SEAL 60255 (35510)		EA	1	*	*	*	*	*	*	*	*	72	31
F	3120-929-8367	BEARING, BALL, ANNULAR: ROTOR SHAFT 60262 (35510)		EA	1	*	*	*	*	*	*	*	*	72	32
F	5330-823-4919	SEAL, TEFLON LID 60186 (35510)		EA	1	*	*	*	*	*	*	*	*	72	33
F	5330-927-0065	SEAL, PLAIN: ROTOR SHAFT 60252 (35510)		EA	1	*	*	*	*	*	*	*	*	72	34
X1		ROTOR ASSEMBLY 60206 (35510)		EA	1									72	35
X1		STATOR ASSEMBLY 60061 (35510)		EA	1									72	36
F	5305-775-5194	SCREW, MACHINE: RECTIFIER MOUNT, NO. 10-32 X 5/8 IN. LG 5288 (35510)		EA	4	*	*	*	*	*	*	*	*	72	37
F		WASHER, INSULATING 55770 (35510)		EA	5	*	*	*	*	*	*	*	*	72	38
F	5310-361-9897	WASHER, GUARD: RECTIFIER MOUNT 2385 (35510)		EA	4	*	*	*	*	*	*	*	*	72	39
F	5310-775-5130	WASHER, LOCK: RECTIFIER MOUNT 2434 (35510)		EA	2	*	*	*	*	*	*	*	*	72	40
F	5305-984-6191	SCREW, MACHINE: INSULATOR SUPPORT 3044 (35510)		EA	2	*	*	*	*	*	*	*	*	72	41
1		INSULATOR 60265 (35510)		EA	1									72	42

(1) SMR CODE	(2) FEDERAL STOCK NUMBER	(3) DESCRIPTION REF NUMBER & MFR CODE	USABLE ON CODE	(4) UNIT OF MEAS	(5) QTY INC IN UNIT	(6) 30-DAY DS MAINT ALLOWANCE (a) 1-20	(b) 21-50	(c) 51-100	(7) 30-DAY GS MAINT ALLOWANCE (a) 1-20	(b) 21-50	(c) 51-100	(8) 1-YR ALW PER 100 EQUIP CNTGY	(9) DEPOT MAINT ALW PER 100 EQUIP	(10) ILLUSTRATION (a) FIG. NO.	(b) ITEM NO
P F		STUD, PLAIN: RECTIFIER MOUNT, NO. 10-32 X 1 1/4 IN. LG 60060 (35510)		EA	1	*	*	*	*	*	*	*	*	72	4
P F	5310-775-5189	NUT, PLAIN, HEXAGON: RECTIFIER MOUNT 2313 (35510)		EA	1	*	*	*	*	*	*	*	*	72	4
P F	5961-788-3650	RECTIFIER, METALLIC 58242 (35510)		EA	3	*	*	*	*	*	*	*	*	72	4
P F	6130-764-5600	RECTIFIER, METALLIC 58243 (35510)		EA	3	*	*	*	*	*	*	*	*	72	4
P F		MOUNT, RECTIFIER 60232 (35510)		EA	1	*	*	*	*	*	*	*	*	72	4
P F		MOUNT, RECTIFIER 60231 (35510)		EA	1	*	*	*	*	*	*	*	*	72	4
P F	2920-065-0047	BUSHING, SLEEVE: RECTIFIER MOUNT 60245 (35510)		EA	3	*	*	*	*	*	*	*	*	72	4
X1		INSULATOR ASSEMBLY 60057 (35510)		EA	2									72	5
P F	5305-984-6189	SCREW, MACHINE: CAPACITOR COVER MTG 75448 (35510)		EA	2	*	*	*	*	*	*	*	*	72	5
P F	5310-045-3299	WASHER, LOCK: CAPACITOR COVER MTG 36895 (35510)		EA	2	*	*	*	*	*	*	*	*	72	5
X1		COVER, CAPACITOR 60184 (35510)		EA	1									72	5
P F		SCREW, MACHINE: CAPACITOR MTG 75446 (35510)		EA	4	*	*	*	*	*	*	*	*	72	5
P F	5310-045-3299	WASHER, LOCK: CAPACITOR MTG, NO. 8 36895 (35510)		EA	10	*	*	*	*	*	*	*	*	72	5
X1		CLAMP 60028 (35510)		EA	1									72	5
P F		SCREW, MACHINE: CAPACITOR MTG, NO. 8-32 X 3/8 IN. LG 75446 (35510)		EA	4	*	*	*	*	*	*	*	*	72	5
P F	5310-045-3299	WASHER, LOCK: CAPACITOR MTG 36895 (35510)		EA	4	*	*	*	*	*	*	*	*	72	5
P F	2920-928-6141	CAPACITOR AND LEAD ASSEMBLY 60238 (35510)		EA	1	*	*	*	*	*	*	*	*	72	5
P F	2920-059-4893	GASKET: CAPACITOR AND LEAD 60217 (35510)		EA	1	*	*	*	*	*	*	*	*	72	6
P F	5305-775-5117	SCREW, MACHINE: SOCKET MTG 1253 (35510)		EA	2	*	*	*	*	*	*	*	*	72	6
X1		CONNECTOR 60050 (35510)		EA	1									72	6
X1		PIN 18859 (35510)		EA	1									72	6
X1		HOUSING ASSEMBLY 60183 (35510)		EA	1									72	6
		GROUP 16 - ENGINE AND COMPONENTS													
P F S		ENGINE, DIESEL 5067-5240FWD144712 (72582)		EA	1	*	*	*	*	*	*	*	*	73	
X20		CLIP, TUBE: FUEL PUMP LINE 3224539 (72582)		EA	2									73	

(1) SMR CODE	(2) FEDERAL STOCK NUMBER	(3) DESCRIPTION REF NUMBER & MFR CODE	USABLE ON CODE	(4) UNIT OF MEAS	(5) QTY INC IN UNIT	(6) 30-DAY DS MAINT ALLOWANCE (a) 1-20	(b) 21-50	(c) 51-100	(7) 30-DAY GS MAINT ALLOWANCE (a) 1-20	(b) 21-50	(c) 51-100	(8) 1-YR ALW PER 100 EQUIP CNTGY	(9) DEPOT MAINT ALW PER 100 EQUIP	(10) ILLUSTRATION (a) FIG. NO.	(b) ITEM NO.
X20		NUT, PLAIN, HEXAGON: TUBE CLAMP MTG, NO. 10-32 THD SIZE 120614 (72582)		EA	3									73	2
P O	5310-045-3296	WASHER, LOCK: TUBE CLAMP MTG, NO. 10 120217 (72582)		EA	3	*	*	*	*	*	*	*	*	73	3
X20		SCREW, MACHINE: TUBE CLAMP MTG, NO. 10-32 X 1/2 IN. LG 132908 (72582)		EA	3									73	4
X20		CLAMP, TUBE: FUEL LINE 5112241 (72582)		EA	6									73	5
P O	5305-577-5462	SCREW, CAP, HEXAGON HEAD: TUBE CLAMP MTG, 3/8-16 X 1 IN. LG 179839 (72582)		EA	1	*	*	*	*	*	*	*	*	73	6
P O	5310-261-7340	WASHER, LOCK: TUBE CLAMP MTG, 3/8 IN. 103321 (72582)		EA	1	*	*	*	*	*	*	*	*	73	7
P O	5310-080-6004	WASHER, FLAT: TUBE CLAMP MTG, 3/8 IN. 103341 (72582)		EA	1	*	*	*	*	*	*	*	*	73	8
X20		CLAMP, LOOP: DRAIN TUBE, 3/8 IN. TUBE 5110070 (72582)		EA	1									73	9
P O		TUBE ASSEMBLY: FUEL DRAIN 5128016 (72582)		EA	1	*	*	*	*	*	*	*	*	73	10
P O	2910-780-5223	ELBOW, RESTRICTED: FUEL DRAIN 5116440 (72582)		EA	1	*	*	*	*	*	*	*	*	73	11
P O	4710-437-7148	TUBE ASSEMBLY: FUEL PUMP TO FILTER 5130860 (72582)		EA	1	*	*	*	*	*	*	*	*	73	12
P O	4730-740-2581	SLEEVE, SAFETY: FUEL TUBE 5179938 (72582)		EA	1	*	*	*	*	*	*	*	*	73	13
P O	4730-740-2582	NUT, TUBE COUPLING 5179937 (72582)		EA	1	*	*	*	*	*	*	*	*	73	14
P O	4730-277-8274	ELBOW, PIPE TO TUBE: FUEL PUMP LINE 137423 (72582)		EA	1	*	*	*	*	*	*	*	*	73	15
P O	4710-437-7149	TUBE, FUEL OUTLET 5129240 (72582)		EA	1	*	*	*	*	*	*	*	*	73	16
P O	4730-740-2581	SLEEVE, SAFETY: FUEL TUBE 5179938 (72582)		EA	2	*	*	*	*	*	*	*	*	73	17
P O	4730-740-2582	NUT, TUBE COUPLING 5179937 (72582)		EA	2	*	*	*	*	*	*	*	*	73	18
P O	4710-437-7150	TUBE, FUEL OUTLET 5129232 (72582)		EA	1	*	*	*	*	*	*	*	*	73	19
P O	4710-437-7151	TUBE, CROSSOVER, FUEL 5129242 (72582)		EA	1	*	*	*	*	*	*	*	*	73	20
P O	4730-740-2581	SLEEVE, SAFETY: FUEL TUBE 5179938 (72582)		EA	4	*	*	*	*	*	*	*	*	73	21
P O	4730-740-2582	NUT, TUBE COUPLING 5179937 (72582)		EA	4	*	*	*	*	*	*	*	*	73	22
P O	4730-740-2580	ADAPTER, STRAIGHT, PIPE TO TUBE: FUEL FILTER LINE 5179936 (72582)		EA	2	*	*	*	*	*	*	*	*	73	23
P O	4730-089-6448	ELBOW, PIPE TO TUBE: FUEL LINE TO CYLINDER HEAD, 45 DEGREE, 3/8 IN SEALASTIC 5125447 (72582)		EA	1	*	*	*	*	*	*	*	*	73	24

(1) SMR CODE	(2) FEDERAL STOCK NUMBER	(3) DESCRIPTION REF NUMBER & MFR CODE	USABLE ON CODE	(4) UNIT OF MEAS	(5) QTY INC IN UNIT	(6) 30-DAY DS MAINT ALLOWANCE (a) 1-20	(b) 21-50	(c) 51-100	(7) 30-DAY GS MAINT ALLOWANCE (a) 1-20	(b) 21-50	(c) 51-100	(8) 1-YR ALW PER 100 EQUIP CNTGY	(9) DEPOT MAINT ALW PER 100 EQUIP	(10) ILLUSTRATIO (a) FIG. NO.
P O	4730-203-9058	ELBOW, PIPE TO TUBE: FUEL LINE TO CYLINDER HEAD 5179969 (72582)		EA	1	*	*	*	*	*	*	*	*	73
P O	4730-203-9058	ELBOW, PIPE TO TUBE: FILTER LINE 5179969 (72582)		EA	2	*	*	*	*	*	*	*	*	73
P O	4730-457-6439	TEE, PIPE TO TUBE: FUEL FILTER LINE 5185519 (72582)		EA	1	*	*	*	*	*	*	*	*	73
P O		NUT, PLAIN, HEXAGON: FUEL STRAINER MTG, 3/8-16 THD SIZE 117062 (72582)		EA	2	*	*	*	*	*	*	*	*	74
P O	5310-261-7340	WASHER, LOCK: FUEL STRAINER MTG, 3/8 IN. 103321 (72582)		EA	2	*	*	*	*	*	*	*	*	74
P O	5305-543-2419	SCREW, CAP, HEXAGON HEAD: FUEL STRAINER MTG, 3/8-16 X 1 1/8 IN.LG 186619 (72582)		EA	2	*	*	*	*	*	*	*	*	74
P O		VALVE, CHECK: FUEL LINE 5135308ND (72582)		EA	1	*	*	*	*	*	*	*	*	74
P O	4730-254-1801	ELBOW, PIPE, STREET: FUEL STRAINER CHECK VALVE, 3/8 IN. NPT		EA	1	*	*	*	*	*	*	*	*	74
X20	4730-929-3463	STRAINER ASSEMBLY: PRIMARY, FUEL 6435875 (72582)		EA	1									74
P O	4730-922-1999	PLUG, COVER 103879 (72582)		EA	2	*	*	*	*	*	*	*	*	74
X20		COVER, STRAINER 6435874 (72582)		EA	1									74
P O	2910-080-7294	SCREW, COVER 6435793 (72582)		EA	1	*	*	*	*	*	*	*	*	74
X1		GASKET: 6435794 (72582)		EA	1									74
P O	2940-745-7730	FILTER, ELEMENT FLUID PRESSURE 5575032 (72582)		EA	1	*	*	*	*	*	*	*	*	74
X1		GASKET 5574161 (72582)		EA	1									74
P O	4820-849-1220	COCK, DRAIN 103647 (72582)		EA	1	*	*	*	*	*	*	*	*	74
X20	4730-922-2424	SHELL ASSEMBLY 5575893 (72582)		EA	1									74
X1		RING, 5574120 (72582)		EA	1									74
X1		SEAT 5574123 (72582)		EA	1									74
X1		SEAL 5574126 (72582)		EA	1									74
X1		WASHER 5574122 (72582)		EA	1									74
X1		SPRING 5574124 (72582)		EA	1									74
P O		SWITCH, FUEL 1507667 (72582)		EA	1	*	*	*	*	*	*	*	*	74
P O	4730-186-3024	BUSHING, PIPE: SWITCH MTG, 1/4 X 1/8 IN. NPT		EA	1	*	*	*	*	*	*	*	*	74

(1) SMR CODE	(2) FEDERAL STOCK NUMBER	(3) DESCRIPTION REF NUMBER & MFR CODE	USABLE ON CODE	(4) UNIT OF MEAS	(5) QTY INC IN UNIT	(6) 30-DAY OS MAINT ALLOWANCE (a) 1-20	(b) 21-50	(c) 51-100	(7) 30-DAY GS MAINT ALLOWANCE (a) 1-20	(b) 21-50	(c) 51-100	(8) 1-YR ALW PER 100 EQUIP CNTGY	(9) DEPOT MAINT ALW PER 100 EQUIP	(10) ILLUSTRATION (a) FIG. NO.	(b) ITEM NO.
P O		ELBOW, PIPE TO HOSE		EA	1	*	*	*	*	*	*	*	*	74	21
P O		TEE, PIPE TO HOSE AND TUBE		EA	1	*	*	*	*	*	*	*	*	74	22
X20	5310-011-7062	NUT, PLAIN, HEXAGON: FUEL FILTER MTG, 3/8-16 THD SIZE 117062 (72582)		EA	2									74	23
P O	5310-261-7340	WASHER, LOCK: FUEL FILTER MTG, 3/8 IN. 103321 (72582)		EA	2	*	*	*	*	*	*	*	*	74	24
P O	5305-068-0511	SCREW, CAP, HEXAGON HEAD: FUEL FILTER MTG, 3/8-16 X 1 1/4 IN. LG MS90728-72 (96906)		EA	2	*	*	*	*	*	*	*	*	74	25
P 2 O	2910-781-1354	FILTER, FUEL: FLUID PRESSURE 5574533 (72582)		EA	1	*	*	*	*	*	*	*	*	74	
X20	2910-932-9634	COVER ASSEMBLY 6436254 (72582)		EA	1									74	26
X1		BOLT 5574118 (72582)		EA	1									74	27
X1		WASHER 1503536 (72582)		EA	1									74	28
P O	4730-187-4207	PLUG, PIPE: HEAD, 1/4 IN. NPT 103878 (72582)		EA	1	*	*	*	*	*	*	*	*	74	29
P O	2910-620-7366	FILTER ELEMENT: FLUID PRESSURE 5574508 (72582)		EA	1	*	*	*	*	*	*	*	*	74	30
X1		GASKET 5574161 (72582)		EA	1									74	31
P O	4820-849-1220	COCK, DRAIN 103647 (72582)		EA	1	*	*	*	*	*	*	*	*	74	32
X20	2910-015-3609	SHELL ASSEMBLY 5575169 (72582)		EA	1									74	33
X1		RING 5574120 (72582)		EA	1									74	34
X1		SEAT 5574123 (72582)		EA	1									74	35
X1		SEAL 5574126 (72582)		EA	1									74	36
X1		WASHER 5574122 (72582)		EA	1									74	37
X1		SPRING 5574124 (72582)		EA	1									74	38
P O	5305-269-3210	SCREW, CAP, HEXAGON HEAD: FILTER BRACKET MTG, 3/8-16 X 1 IN. LG 180121 (72582)		EA	1	*	*	*	*	*	*	*	*	74	39
P O	5310-261-7340	WASHER, LOCK: FILTER BRACKET MTG, 3/8 IN. 103321 (72582)		EA	1	*	*	*	*	*	*	*	*	74	40
X20		BRACKET: FILTER MTG 5129243 (52582)		EA	1									74	41
P O	5330-202-4167	WASHER, NONMETALLIC: BRACKET 5152904 (72582) (ALSO PART OF PARTS KIT, FSN 2815-947-2951)		EA	1	*	*	*	*	*	*	*	*	74	42
P O	6115-055-1584	GASKET: BRACKET TO CYLINDER HEAD 5116242 (72582) (ALSO PART OF PARTS KITS, FSN 2815-947-2951 AND 2815-792-9839)		EA	1	*	*	*	*	*	*	*	*	74	43

(1) SMR CODE	(2) FEDERAL STOCK NUMBER	(3) DESCRIPTION REF NUMBER & MFR CODE	USABLE ON CODE	(4) UNIT OF MEAS	(5) QTY INC IN UNIT	(6) 30-DAY DS MAINT ALLOWANCE (a) 1-20	(b) 21-50	(c) 51-100	(7) 30-DAY GS MAINT ALLOWANCE (a) 1-20	(b) 21-50	(c) 51-100	(8) 1-YR ALW PER 100 EQUIP CNTGY	(9) DEPDT MAINT ALW PER 100 EQUIP	(10) ILLUSTRAT (a) FIG. NO.
X2F	2815-314-3585	SUPPORT AND CAP ASSEMBLY: ENGINE, FRONT 510262 (72582)		EA	1									75
P F	5305-069-5576	SCREW, CAP, HEXAGON HEAD: SUPPORT, 7/16-14 X 2 1/4 IN. LG 179867 (72582)		EA	2	*	*	*	*	*	*	*	*	75
P F	5310-010-3322	WASHER, LOCK: SUPPORT, 7/16 IN. 103322 (72582)		EA	2	*	*	*	*	*	*	*	*	75
P F	5306-685-8361	BOLT, MACHINE: PULLEY MTG, 3/4-16 X 1 3/4 IN. LG 271632 (72582)		EA	1	*	*	*	*	*	*	*	*	75
P F	2815-932-4869	WASHER, FLAT: PULLEY RETAINER, 3/4 IN. 5180291 (72582)		EA	1	*	*	*	*	*	*	*	*	75
X2F		CONE, PULLEY 5119189 (72582)		EA	2									75
X2F		PULLEY, CRANKSHAFT 5170452 (72582)		EA	1									75
P F	2815-599-6624	PACKING, PREFORMED: SUPPORT CUSHION 5166864 (72582)		EA	1	*	*	*	*	*	*	*	*	75
P F	5305-045-1988	SCREW, CAP, HEXAGON HEAD: ENGINE SUPPORT 180147 (72582)		EA	6	*	*	*	*	*	*	*	*	75
P F	5310-010-3322	WASHER, LOCK: ENGINE SUPPORT, 7/16 IN. 103322 (72582)		EA	6	*	*	*	*	*	*	*	*	75
X2F	2815-921-5358	SUPPORT: ENGINE, FRONT 5124762 (72582)		EA	1									75
P O		HOSE ASSEMBLY: ADAPTER TO FILTER 134191 (23382)		EA	2	*	*	*	*	*	*	*	*	76
P O	5310-531-1194	NUT, PLAIN, HEXAGON: OIL FILTER MTG, 3/8-24 THD SIZE		EA	4	*	*	*	*	*	*	*	*	76
P O	5310-261-7340	WASHER, LOCK: OIL FILTER MTG, 3/8 IN. 103321 (72582)		EA	4	*	*	*	*	*	*	*	*	76
P O	5305-269-2805	SCREW, CAP, HEXAGON HEAD: OIL FILTER MTG, 3/8-24 X 1 1/4 IN. LG		EA	4	*	*	*	*	*	*	*	*	76
P O	4730-331-4697	ELBOW, PIPE, TO TUBE: OIL FILTER LINES 8-8CTX (45681)		EA	4	*	*	*	*	*	*	*	*	76
P O		BUSHING, REDUCER 6567 (23382)		EA	4	*	*	*	*	*	*	*	*	76
P20	2940-810-5390	FILTER ASSEMBLY: LUBRICATION OIL 5137659 (72582)		EA	1	*	*	*	*	*	*	*	*	76
P O	4730-202-8251	PLUG, PIPE: FILTER COVER, 1 1/4 IN. NPT		EA	2	*	*	*	*	*	*	*	*	76
P O	2940-555-6348	FILTER ELEMENT, FLUID 5573014 (72582)		EA	1	*	*	*	*	*	*	*	*	76
X1		WASHER 5571024 (72582)		EA	1									76
P O	2815-922-2011	COVER, FILTER 5137651 (72582)		EA	1	*	*	*	*	*	*	*	*	76
P O	5310-012-2366	NUT, PLAIN, HEXAGON: FILTER STUD, 5/8-18 THD SIZE 122366 (72582)		EA	1	*	*	*	*	*	*	*	*	76

(1) SMR CODE	(2) FEDERAL STOCK NUMBER	(3) DESCRIPTION REF NUMBER & MFR CODE	USABLE ON CODE	(4) UNIT OF MEAS	(5) QTY INC IN UNIT	(6) 30-DAY OS MAINT ALLOWANCE (a) 1-20	(b) 21-50	(c) 51-100	(7) 30-DAY GS MAINT ALLOWANCE (a) 1-20	(b) 21-50	(c) 51-100	(8) 1-YR ALW PER 100 EQUIP CNTGY	(9) DEPOT MAINT ALW PER 100 EQUIP	(10) ILLUSTRATION (a) FIG. NO.	(b) ITEM NO.
O	5310-262-4701	WASHER, FLAT: SPRING RETAINER 5154538 (72582)		EA	1	*	*	*	*	*	*	*	*	76	13
O	5330-604-8094	PACKING, PREFORMED: SPRING RETAINER 5187310 (72582)		EA	1	*	*	*	*	*	*	*	*	76	14
O	5330-629-6340	RETAINER, LUBE OIL FILTER 5187309 (72582)		EA	1	*	*	*	*	*	*	*	*	76	15
O	5340-801-8731	SPRING, HELICAL, COMPRESSION 5187308 (72582)		EA	1	*	*	*	*	*	*	*	*	76	16
O	2940-833-0870	GASKET: STUD 6437298 (72582)		EA	1	*	*	*	*	*	*	*	*	76	17
O	5306-870-6222	STUD, OIL FILTER 5120740 (72582)		EA	1	*	*	*	*	*	*	*	*	76	18
1		SHELL 5574008 (72582)		EA	1									76	19
O	5305-725-2317	SCREW, CAP, HEXAGON HEAD: OIL FILTER ADAPTER MTG, 3/8-16 X 1 1/2 IN. LG 186628 (72582)		EA	4	*	*	*	*	*	*	*	*	76	20
O	5310-261-7340	WASHER, LOCK: FILTER ADAPTER MTG, 3/8 IN. 103321 (72582)		EA	4	*	*	*	*	*	*	*	*	76	21
O	5310-080-6004	WASHER, FLAT: FILTER ADAPTER MTG, 3/8 IN. 103341 (72582)		EA	4	*	*	*	*	*	*	*	*	76	22
O	2940-074-1923	GASKET: OIL FILTER ADAPTER 5133263 (72582)		EA	1	*	*	*	*	*	*	*	*	76	23
O		SCREW, TAPPING, THREAD FORMING: SPRING ADAPTER MTG, NO. 12-24 X 3/4 IN. LG 450865 (72582)		EA	1	*	*	*	*	*	*	*	*	76	24
20		RETAINER, SPRING 5134456 (72582)		EA	1									76	25
O		SPRING, HELICAL, COMPRESSION: OIL FILTER ADAPTER 5134477 (72582)		EA	1	*	*	*	*	*	*	*	*	76	26
O		VALVE: OIL FILTER ADAPTER 5133431 (72582)		EA	1	*	*	*	*	*	*	*	*	76	27
O	2815-921-5375	ADAPTER, OIL FILTER 5134304 (72582)		EA	1	*	*	*	*	*	*	*	*	76	28
F	5306-064-5356	BOLT, MACHINE, 12 POINT: STARTER MTG, 5/8-11 X 1 3/4 IN. LG 9418228 (72582)		EA	3	*	*	*	*	*	*	*	*	77	1
F	5310-820-6653	WASHER, LOCK: STARTER MTG, 5/8 IN. 103325 (72582)		EA	3	*	*	*	*	*	*	*	*	77	2
F R	2920-089-2030	MOTOR, STARTING 1113940 (16764)		EA	1	*	*	*	*	*	*	*	*	77	
20	6150-758-0332	LEAD W/TERMINAL 1953236 (16764)		EA	1									77	3
O	5310-834-8732	NUT, PLAIN, HEXAGON: TERMINAL 453287 (16764)		EA	1	*	*	*	*	*	*	*	*	77	4
O	5310-999-2296	WASHER, LOCK: TERMINAL 9421427 (16764)		EA	1	*	*	*	*	*	*	*	*	77	5
O	5306-775-5209	SCREW, ASSEMBLED WASHER: SWITCH MTG 1930611 (16764)		EA	4	*	*	*	*	*	*	*	*	77	6

(1) SMR CODE	(2) FEDERAL STOCK NUMBER	(3) DESCRIPTION REF NUMBER & MFR CODE	USABLE ON CODE	(4) UNIT OF MEAS	(5) QTY INC IN UNIT	(6) 30-DAY OS MAINT ALLOWANCE (a) 1-20	(b) 21-50	(c) 51-100	(7) 30-DAY GS MAINT ALLOWANCE (a) 1-20	(b) 21-50	(c) 51-100	(8) 1-YR ALW PER 100 EQUIP CNTGY	(9) DEPOT MAINT ALW PER 100 EQUIP	(10) ILLUSTRATION (a) FIG. NO.	(b) ITEM NO.
X20	5935-821-2944	CONNECTOR, TERMINAL 1948507 (16764)		EA	1									77	7
P O	2920-807-2408	SWITCH, SOLENOID SP6043 (16764)		EA	1	*	*	*	*	*	*	*	*	77	8
P F		BOLT, MACHINE, SOCKET HEAD: DRIVE HOUSING MTG 1948537 (16764)		EA	1	*	*	*	*	*	*	*	*	77	9
P F	5306-783-5183	BOLT, MACHINE, SOCKET HEAD: DRIVE HOUSING MTG 1948536 (16764)		EA	5	*	*	*	*	*	*	*	*	77	10
X2F	2920-901-7815	HOUSING, DRIVE 1957847 (16764)		EA	1									77	11
P F	3120-828-6852	BUSHING, SLEEVE 1945509 (16764)		EA	1	*	*	*	*	*	*	*	*	77	12
P F	5330-842-1901	GASKET, HOUSING 1948538 (16764)		EA	1	*	*	*	*	*	*	*	*	77	13
P F	5340-957-1826	PLUG, LEVER HOUSING 1945356 (16764)		EA	1	*	*	*	*	*	*	*	*	77	14
P F	5330-914-0703	GASKET: PLUG 1964857 (16764)		EA	1	*	*	*	*	*	*	*	*	77	15
P F	5340-715-1152	RING, RETAINING: PLUNGER 9415235 (16764)		EA	1	*	*	*	*	*	*	*	*	77	16
P F	5340-822-2241	RETAINER, SPRING 1948526 (16764)		EA	1	*	*	*	*	*	*	*	*	77	17
P F	2920-812-0196	SPRING, HELICAL, COMPRESSION: PLUNGER 1948521 (16764)		EA	1	*	*	*	*	*	*	*	*	77	18
P F	5340-822-2236	RETAINER, SPRING 1948520 (16764)		EA	1	*	*	*	*	*	*	*	*	77	19
P F	2920-822-2287	PLUNGER, SOLENOID 1948522 (16764)		EA	1	*	*	*	*	*	*	*	*	77	20
P F	5310-062-2051	WASHER, FLAT: SPRING RETAINER 1948519 (16764)		EA	1	*	*	*	*	*	*	*	*	77	21
P F	2920-839-1864	BOLT, PLUNGER 1949618 (16764)		EA	1	*	*	*	*	*	*	*	*	77	22
P F	5310-965-6000	NUT, PLUNGER 9412305 (16764)		EA	1	*	*	*	*	*	*	*	*	77	23
P F	5340-715-1152	RING, RETAINING 9415235 (16764)		EA	1	*	*	*	*	*	*	*	*	77	24
P F	5330-260-9311	PACKING, PREFORMED: PIN 1914373 (16764)		EA	1	*	*	*	*	*	*	*	*	77	25
P F	5330-997-9020	PACKING, PREFORMED: PIN 1921805 (16764)		EA	1	*	*	*	*	*	*	*	*	77	26
X2F	2920-034-4216	PIN, STRAIGHT, SHOULDERED: LEVER HOUSING 1948529 (16764)		EA	1									77	27
X2F	6110-757-7187	LEVER, SHIFT 1945484 (16764)		EA	1									77	28
P F	2920-690-9139	CLUTCH, DRIVE 1947920 (16764)		EA	1	*	*	*	*	*	*	*	*	77	29
P F	5330-297-7319	WASHER, NONMETALLIC: BRAKE 1911644 (16764)		EA	1	*	*	*	*	*	*	*	*	77	30
P F	5306-550-9129	BOLT, MACHINE, HEXAGON HEAD: LEVER HOUSING MTG 1914869 (16764)		EA	5	*	*	*	*	*	*	*	*	77	31

(1) SMR CODE	(2) FEDERAL STOCK NUMBER	(3) DESCRIPTION REF NUMBER & MFR CODE	USABLE ON CODE	(4) UNIT OF MEAS	(5) QTY INC IN UNIT	(6) 30-DAY OS MAINT ALLOWANCE (a) 1-20	(b) 21-50	(c) 51-100	(7) 30-DAY GS MAINT ALLOWANCE (a) 1-20	(b) 21-50	(c) 51-100	(8) 1-YR ALW PER 100 EQUIP CNTGY	(9) DEPOT MAINT ALW PER 100 EQUIP	(10) ILLUSTRATION (a) FIG. NO.	(b) ITEM NO.
P F	2815-921-5366	WASHER, LOCK: LEVER HOUSING MTG 9421423 (16764)		EA	5	*	*	*	*	*	*	*	*	77	32
X2F	2920-999-2537	HOUSING, LEVER 1951078 (16764)		EA	1									77	33
P F	5330-285-9480	SEAL, PLAIN, ENCASED: LEVER HOUSING 1918047 (16764)		EA	1	*	*	*	*	*	*	*	*	77	34
P F	2990-661-8951	BUSHING, SLEEVE: LEVER HOUSING 1923484 (16964)		EA	1	*	*	*	*	*	*	*	*	77	35
P F	5310-081-2658	WASHER, FLAT: SPACER 1940006 (16764)		EA	1	*	*	*	*	*	*	*	*	77	36
P F	5305-225-6943	SCREW, MACHINE: COVER PLATE 9414397 (16764)		EA	4	*	*	*	*	*	*	*	*	77	37
X2F	2920-034-4220	PLATE, COVER 1948513 (16764)		EA	2									77	38
P F	2920-083-5406	GASKET: COVER PLATE 1948512 (16764)		EA	2	*	*	*	*	*	*	*	*	77	39
P F	5306-550-9129	BOLT, MACHINE, HEXAGON HEAD: COMMUTATOR END FRAME MTG 1914869 (16764)		EA	4	*	*	*	*	*	*	*	*	77	40
P F	2815-921-5366	WASHER, LOCK: COMMUTATOR END FRAME MTG 9421423 (16764)		EA	4	*	*	*	*	*	*	*	*	77	41
P F	5310-178-9612	WASHER, THRUST: COMMUTATOR END 1914842 (16764)		EA	1	*	*	*	*	*	*	*	*	77	42
P F	2920-015-3058	ARMATURE, STARTER 1945500 (16764)		EA	1	*	*	*	*	*	*	*	*	77	43
P F	5310-834-8732	NUT, PLAIN, HEXAGON: TERMINAL 453287 (16764)		EA	1	*	*	*	*	*	*	*	*	77	44
P F	5310-167-0839	WASHER, FLAT: TERMINAL 1914647 (16764)		EA	1	*	*	*	*	*	*	*	*	77	45
P F	5330-752-7673	WASHER, NONMETALLIC: 1938446 (16764)		EA	2	*	*	*	*	*	*	*	*	77	46
P F	5305-428-6527	SCREW, MACHINE: POLE SHOE 1913960 (16764)		EA	8	*	*	*	*	*	*	*	*	77	47
P F	2920-999-2526	SHOE, POLE 934478 (16764)		EA	4	*	*	*	*	*	*	*	*	77	48
X2F	5970-657-8133	BUSHING, INSULATING 1937116 (16764)		EA	1									77	49
P F	2920-888-8613	COIL, SET: FIELD 1945496 (16764)		EA	1	*	*	*	*	*	*	*	*	77	50
X1		STUD 1945499 (16764)		EA	1									77	51
X2F	5970-669-9431	INSULATOR: FIELD COIL 1913534 (16764)		EA	2									77	52
X2F	5970-082-8300	INSULATOR: FIELD COIL 1955988 (16764)		EA	1									77	53
P F	5305-999-2284	SCREW, MACHINE: BRUSH LEAD MTG 9419725 (16764)		EA	8	*	*	*	*	*	*	*	*	78	1
P F	5977-754-8153	BRUSH, CONTACT: ELECTRICAL 1946407 (16764)		EA	8	*	*	*	*	*	*	*	*	78	2

(1) SMR CODE	(2) FEDERAL STOCK NUMBER	(3) DESCRIPTION REF NUMBER & MFR CODE	USABLE ON CODE	(4) UNIT OF MEAS	(5) QTY INC IN UNIT	(6) 30-DAY OS MAINT ALLOWANCE (a) 1-20	(b) 21-50	(c) 51-100	(7) 30-DAY GS MAINT ALLOWANCE (a) 1-20	(b) 21-50	(c) 51-100	(8) 1-YR ALW PER 100 EQUIP CNTGY	(9) DEPOT MAINT ALW PER 100 EQUIP	(10) ILLUSTRATION (a) FIG. NO.	(b) ITEM NO.
P F	5310-768-0318	NUT, PLAIN, HEXAGON: TERMINAL STUD 453285 (16764)		EA	1	*	*	*	*	*	*	*	*	78	3
P F	5310-550-1680	WASHER, LOCK: TERMINAL STUD 1914648 (16764)		EA	2	*	*	*	*	*	*	*	*	78	4
P F	5310-834-8732	NUT, PLAIN, HEXAGON: TERMINAL STUD 453287 (16764)		EA	1	*	*	*	*	*	*	*	*	78	5
P F	5310-167-0839	WASHER, FLAT: TERMINAL STUD 1914647 (16764)		EA	1	*	*	*	*	*	*	*	*	78	6
X2F	5970-734-8919	INSULATOR, STUD 1918687 (16764)		EA	1									78	7
P F	5970-734-8918	BUSHING, SLEEVE: TERMINAL STUD 1918690 (16764)		EA	1	*	*	*	*	*	*	*	*	78	8
P F	5305-984-6193	SCREW, MACHINE: BRUSH PLATE MTG 9417096 (16764)		EA	3	*	*	*	*	*	*	*	*	78	9
P F	5310-809-3365	WASHER, LOCK: BRUSH PLATE MTG 1914107 (16764)		EA	3	*	*	*	*	*	*	*	*	78	10
P F	5310-685-1653	WASHER, FLAT: BRUSH PLATE MTG 1913086 (16764)		EA	3	*	*	*	*	*	*	*	*	78	11
P F	5330-292-2188	WASHER, NONMETALLIC 1861791 (16764)		EA	2	*	*	*	*	*	*	*	*	78	12
X2F	5977-786-9564	PLATE ASSEMBLY: BRUSH 1948515 (16764)		EA	1									78	13
X2F	2920-034-7342	FRAME, COMMUTATOR END 1948518 (16764)		EA	1									78	14
X1		PLUG 103893 (16764)		EA	1									78	15
P F	3120-350-4492	BUSHING, SLEEVE 38273 (16764)		EA	1	*	*	*	*	*	*	*	*	78	16
P O		BELT SET, V: FAN AND COMPRESSOR DRIVE 1-2X36DEGX6112 (24161)		EA	1	*	*	*	*	*	*	*	*	79	1
P O		NUT, PLAIN, HEXAGON: FAN TO HUB EXTENSION, 5/16-24 THD SIZE 4202 (23382)		EA	6	*	*	*	*	*	*	*	*	79	2
P O		WASHER, LOCK: FAN TO HUB EXTENSION, 5/16 IN. 4318 (23382)		EA	6	*	*	*	*	*	*	*	*	79	3
P O		BOLT, MACHINE FAN TO HUB EXTENSION, 5/16-24 X 1 1/4 IN. LG 5847 (23382)		EA	6	*	*	*	*	*	*	*	*	79	4
P O	2930-477-3436	FAN, ENGINE COOLING 5173871 (72582)		EA	1	*	*	*	*	*	*	*	*	79	5
P O	5306-226-4826	BOLT, MACHINE: HUB EXTENSION MTG, 5/16-18 X 7/8 IN. LG 186625 (72582)		EA	6	*	*	*	*	*	*	*	*	79	6
P O	5310-407-9566	WASHER, LOCK: HUB EXTENSION MTG, 5/16 IN. MS35338-45 (96906)		EA	6	*	*	*	*	*	*	*	*	79	7
X20		HUB EXTENSION: FAN 331916 (23382)		EA	1									79	8

(1) SMR CODE	(2) FEDERAL STOCK NUMBER	(3) DESCRIPTION REF NUMBER & MFR CODE / USABLE ON CODE	(4) UNIT OF MEAS	(5) QTY INC IN UNIT	(6) 30-DAY DS MAINT ALLOWANCE (a) 1-20	(b) 21-50	(c) 51-100	(7) 30-DAY GS MAINT ALLOWANCE (a) 1-20	(b) 21-50	(c) 51-100	(8) 1-YR ALW PER 100 EQUIP CNTGY	(9) DEPOT MAINT ALW PER 100 EQUIP	(10) ILLUSTRATION (a) FIG. NO.	(b) ITEM NO.
P O	5306-900-8825	BOLT, ADJUSTING: FAN BELT, 5/16-18 X 5 IN. LG 5108434 (72582)	EA	1	*	*	*	*	*	*	*	*	79	9
P O		SCREW, CAP, HEXAGON HEAD: PULLEY AND HUB ASSEMBLY MTG, 7/16-14 X 1 3/8 IN. LG 427564 (72582)	EA	4	*	*	*	*	*	*	*	*	79	10
P O	5310-010-3322	WASHER, LOCK: PULLEY AND HUB ASSEMBLY MTG, 7/16 IN. 103322 (72582)	EA	4	*	*	*	*	*	*	*	*	79	11
P O		WASHER, FLAT: PULLEY AND HUB ASSEMBLY MTG, 15/32 IN. 5108436 (72582)	EA	4	*	*	*	*	*	*	*	*	79	12
P O	2930-490-5478	PULLEY AND HUB ASSEMBLY 5131207 (72582)	EA	1	*	*	*	*	*	*	*	*	79	13
X1		CAP AND SPACER 5108868 (72582)	EA	1									79	14
X2F		SCREW, CAP, HEXAGON HEAD: PULLEY MTG, 1/2-20 X 1 1/2 IN. LG 9409060 (72582)	EA	1									79	15
X2F		WASHER, FLAT: PULLEY MTG, SPECIAL 5131123 (72582)	EA	1									79	16
P F		BEARING, FRONT 7451080 (72582)	EA	1	*	*	*	*	*	*	*	*	79	17
P F	2930-735-3067	SHIM, BEARING: 0.015 IN. THK 5131124 (72582)	EA	V	*	*	*	*	*	*	*	*	79	18
P F	2930-735-3411	SHIM, BEARING: 0.020 IN. THK 5131205 (72582)	EA	V	*	*	*	*	*	*	*	*	79	18
P F	5365-410-4918	SHIM, BEARING: 0.025 IN. THK 5131206 (72582)	EA	V	*	*	*	*	*	*	*	*	79	18
P F	5340-731-9464	RETAINER, GREASE 5131095 (72582)	EA	1	*	*	*	*	*	*	*	*	79	19
P F	3120-236-3573	SPACER, SLEEVE 5131122 (72582)	EA	1	*	*	*	*	*	*	*	*	79	20
P F	5330-998-3263	SEAL, PLAIN, ENCASED 5108219 (72582)	EA	1	*	*	*	*	*	*	*	*	79	21
P F	3110-293-8579	BEARING, REAR 7450630 (72582)	EA	1	*	*	*	*	*	*	*	*	79	22
P F	3020-477-3329	PULLEY 5130029 (72582)	EA	1	*	*	*	*	*	*	*	*	79	23
P F	2930-735-3467	SHAFT, FLANGE 5100201 (72582)	EA	1	*	*	*	*	*	*	*	*	79	24
X20	5305-045-1988	SCREW, CAP, HEXAGON HEAD: SUPPORT MTG, 7/16-14 X 1 1/4 IN. LG PC9-3361 (23382)	EA	4									79	25
X20	5310-209-6074	WASHER, LOCK: SUPPORT MTG, 7/16 IN.	EA	4									79	26
X20		SUPPORT, FAN BRACKET 331984 (23382)	EA	1									79	27
P O	5305-042-9478	SCREW, CAP, HEXAGON HEAD: SUPPORT MTG, 3/8-16 X 4 3/4 IN. LG 450517 (72582)	EA	2	*	*	*	*	*	*	*	*	79	28
P O	5310-261-7340	WASHER, LOCK: SUPPORT MTG, 3/8 IN. 103321 (72582)	EA	2	*	*	*	*	*	*	*	*	79	29
X20	5305-017-9864	SCREW, CAP, HEXAGON HEAD: SUPPORT MTG, 7/16-14 X 1 3/4 IN. LG 17[illegible]4 ([illegible]2)	EA	2									79	30

(1) SMR CODE	(2) FEDERAL STOCK NUMBER	(3) DESCRIPTION REF NUMBER & MFR CODE	USABLE ON CODE	(4) UNIT OF MEAS	(5) QTY INC IN UNIT	(6) 30-DAY DS MAINT ALLOWANCE (a) 1-20	(b) 21-50	(c) 51-100	(7) 30-DAY GS MAINT ALLOWANCE (a) 1-20	(b) 21-50	(c) 51-100	(8) 1-YR ALW PER 100 EQUIP CNTGY	(9) DEPOT MAINT ALW PER 100 EQUIP	(10) ILLUSTRATION (a) FIG. NO.	(b) ITEM NO
P 0	5310-010-3322	WASHER, LOCK: SUPPORT MTG, 7/16 IN. 103322 (72582)		EA	2	*	*	*	*	*	*	*	*	79	3
X20		SUPPORT, FAN 5109640 (72582)		EA	1									79	3
P 0	3030-088-4643	V-BELT SET: COOLING FAN 5133177 (72582)		EA	1	*	*	*	*	*	*	*	*	79	3
P 0	5305-269-3219	SCREW, CAP, HEXAGON HEAD: IDLER MTG, 3/8-16 X 2 3/4 IN. LG 179850 (72582)		EA	2	*	*	*	*	*	*	*	*	79	3
P 0	5310-261-7340	WASHER, LOCK: IDLER MTG, 3/8 IN. 103321 (72582)		EA	2	*	*	*	*	*	*	*	*	79	3
P 0	5310-080-6004	WASHER, FLAT: IDLER MTG, 3/8 IN. 103341 (72582)		EA	2	*	*	*	*	*	*	*	*	79	3
P 0	2920-034-1874	PULLEY ASSEMBLY, IDLER: WATER PUMP BELT 5122992 (72582)		EA	1	*	*	*	*	*	*	*	*	79	3
X20	5305-068-0511	SCREW, CAP, HEXAGON HEAD: WATER OUTLET ELBOW MTG, 3/8-16 X 1 1/4 IN. LG 186622 (72582)		EA	4									80	
P 0	5310-261-7340	WASHER, LOCK: WATER OUTLET ELBOW MTG, 3/8 IN. 103321 (72582)		EA	4	*	*	*	*	*	*	*	*	80	
X20		ELBOW, OUTLET: L H 5128492-3 (72582)		EA	1									80	
X20		ELBOW, OUTLET: R H 5128493-5 (72582)		EA	1									80	
P 0	5330-905-2008	GASKET: OUTLET 5122437 (72582)		EA	2	*	*	*	*	*	*	*	*	80	
P 0	4730-202-8970	CLAMP, HOSE: BY-PASS LINE 5186840 (72582)		EA	2	*	*	*	*	*	*	*	*	80	
P 0	2930-780-5229	HOSE, WATER PUMP: BY-PASS 5124877 (72582)		EA	1	*	*	*	*	*	*	*	*	80	
P 0	5306-226-4826	BOLT MACHINE: TUBE FLANGE MTG, 5/16-18 X 7/8 IN. LG 186625 (72582)		EA	6	*	*	*	*	*	*	*	*	80	
P 0	5310-407-9566	WASHER, LOCK: TUBE FLANGE MTG, 5/16 IN. MS35338-45 (96906)		EA	6	*	*	*	*	*	*	*	*	80	
P 0	5305-042-9478	SCREW, CAP, HEXAGON HEAD: L H HOUSING MTG, 3/8-16 X 4 3/4 IN. LG 450517 (72582)		EA	2	*	*	*	*	*	*	*	*	80	1
P 0	5305-206-6786	SCREW, CAP, HEXAGON HEAD: H HOUSING MTG, 3/8-16 X 3 3/4 IN. LG 191249 (72582)		EA	2	*	*	*	*	*	*	*	*	80	1
P 0	5310-261-7340	WASHER, LOCK: HOUSING MTG, 3/8 IN. 103321 (72582)		EA	4	*	*	*	*	*	*	*	*	80	1
P 0	5330-983-9733	PACKING, PREFORMED 5125150 (72582) (ALSO PART OF PARTS KITS, FSN 2815-947-2951 AND 2815-792-9839)		EA	3	*	*	*	*	*	*	*	*	80	
P 0	4730-457-6434	FLANGE, COMPRESSION WATER TUBE 5125867 (72582)		EA	3	*	*	*	*	*	*	*	*	80	

(1) SMR CODE	(2) FEDERAL STOCK NUMBER	(3) DESCRIPTION REF NUMBER & MFR CODE	USABLE ON CODE	(4) UNIT OF MEAS	(5) QTY INC IN UNIT	(6) 30-DAY DS MAINT ALLOWANCE (a) 1-20	(b) 21-50	(c) 51-100	(7) 30-DAY GS MAINT ALLOWANCE (a) 1-20	(b) 21-50	(c) 51-100	(8) 1-YR ALW PER 100 EQUIP CNTGY	(9) DEPOT MAINT ALW PER 100 EQUIP	(10) ILLUSTRATION (a) FIG. NO.	(b) ITEM NO.
X20		TUBE, BY-PASS: WATER 5145230 (72582)		EA	1									80	15
X20		TUBE, CROSSOVER: WATER 5125023 (72582)		EA	1									80	16
P O	4730-044-4867	PLUG, PIPE: HOUSING, L H, 3/8 IN. NPT 444867 (72582)		EA	2	*	*	*	*	*	*	*	*	80	17
X20		HOUSING, THERMOSTAT: L H 5135638 (72582)		EA	1									80	18
P O	4730-044-4867	PLUG, PIPE: HOUSING, R H 444867 (72582)		EA	1	*	*	*	*	*	*	*	*	80	19
P O	4730-709-2786	PLUG, PIPE: HOUSING, R H, 1/2 IN. NPT 5115214 (72582)		EA	1	*	*	*	*	*	*	*	*	80	20
P O	5306-226-4824	BOLT, MACHINE: THERMOSTAT HOUSING COVER MTG, 5/16-18 X 5/8 IN. LG 186618 (72582)		EA	2	*	*	*	*	*	*	*	*	80	21
P O	5310-407-9566	WASHER, LOCK: THERMOSTAT HOUSING COVER MTG, 5/16 IN. MS35338-45 (96906)		EA	2	*	*	*	*	*	*	*	*	80	22
P O	2930-457-1792	COVER, THERMOSTAT HOUSING 5125868 (72582)		EA	1	*	*	*	*	*	*	*	*	80	23
P O	2930-925-8076	GASKET: COVER 5125024 (72582) (ALSO PART OF PARTS KIT, FSN 2815-947-2951)		EA	1	*	*	*	*	*	*	*	*	80	24
X20		HOUSING, THERMOSTAT: R H 5128340 (72582)		EA	1									80	25
P O		GASKET: HOUSING TO BASE 5124997 (72582) (ALSO PART OF PARTS KIT, FSN 2815-947-2951)		EA	2	*	*	*	*	*	*	*	*	80	26
P O	2930-925-7847	SEAL, PLAIN: THERMOSTAT 5134269 (72582)		EA	2	*	*	*	*	*	*	*	*	80	27
P O	6620-970-3667	THERMOSTAT, FLOW CONTROL 5124872 (72582)		EA	2	*	*	*	*	*	*	*	*	80	28
P O	5305-543-2419	SCREW, CAP, HEXAGON HEAD: HOUSING BASE MTG, 3/8-16 X 1 1/8 IN. LG 186619 (72582)		EA	2	*	*	*	*	*	*	*	*	80	29
P O	5305-068-0511	SCREW, CAP, HEXAGON HEAD: R H HOUSING BASE MTG, 3/8-16 X 1 1/4 IN. LG MS90728-72 (96906)		EA	2	*	*	*	*	*	*	*	*	80	30
P O	5310-261-7340	WASHER, LOCK: HOUSING BASE MTG, 3/8 IN. 103321 (72582)		EA	4	*	*	*	*	*	*	*	*	80	31
P O	4370-709-2786	PLUG, PIPE: BASE, 1/2 IN. NPT 5115214 (72582)		EA	1	*	*	*	*	*	*	*	*	80	32
X20		BASE, HOUSING 5124775 (72582)		EA	2									80	33
P O	6115-055-1584	GASKET: BASE MTG 5116242 (72582) (ALSO PART OF PARTS KITS, FSN 2815-947-2951 AND 2815-792-9839)		EA	2	*	*	*	*	*	*	*	*	80	34
P O	5306-226-4826	BOLT, MACHINE: WATER PUMP MTG, 5/16-18 X 7/8 186625 (72582)		EA	4	*	*	*	*	*	*	*	*	81	1

(1) SMR CODE	(2) FEDERAL STOCK NUMBER	(3) DESCRIPTION REF NUMBER & MFR CODE	USABLE ON CODE	(4) UNIT OF MEAS	(5) QTY INC IN UNIT	(6) 30-DAY DS MAINT ALLOWANCE (a) 1-20	(b) 21-50	(c) 51-100	(7) 30-DAY GS MAINT ALLOWANCE (a) 1-20	(b) 21-50	(c) 51-100	(8) 1-YR ALW PER 100 EQUIP CNTGY	(9) DEPOT MAINT ALW PER 100 EQUIP	(10) ILLUSTRATION (a) FIG. NO.	(b) ITEM NO.
P O	5310-407-9566	WASHER, LOCK: WATER PUMP MTG, 5/16 IN. MS35338-45 (96906)		EA	4	*	*	*	*	*	*	*	*	81	2
P O	2815-972-5336	GASKET: WATER PUMP 5133107 (72582) (ALSO PART OF PARTS KIT, FSN 2815-947-2951)		EA	1	*	*	*	*	*	*	*	*	81	3
P O	4730-922-1966	NIPPLE, PIPE: BY-PASS HOSE 5121479 (72582)		EA	1	*	*	*	*	*	*	*	*	81	4
P O		PUMP ASSEMBLY, WATER 5144685 (72582)		EA	1	*	*	*	*	*	*	*	*	81	5
P F		PULLEY, GROOVED: WATER PUMP DRIVE 5144503 (72582)		EA	1	*	*	*	*	*	*	*	*	81	6
P F		PLUG, PIPE: BODY 1/8 IN. NPT 5145009 (72582)		EA	1	*	*	*	*	*	*	*	*	81	7
P F	5306-018-9691	BOLT, ASSEMBLED WASHER: COVER MTG, 5/16-18 X 3/4 IN. LG 189691 (72582)		EA	7	*	*	*	*	*	*	*	*	81	8
X1		COVER 5119283 (72582)		EA	1									81	9
X1		GASKET 5119282 (72582) (PART OF PARTS KIT, FSN 2815-947-2951)		EA	1									81	10
X1		IMPELLER 5113800 (72582)		EA	1									81	11
X1		SEAL 5130959 (72582)		EA	1									81	12
X1		BEARING AND SHAFT 904827 (72582)		EA	1									81	13
X1		BODY 5144685 (72582)		EA	1									81	14
X2F		PULLEY, DRIVE		EA	1									82	1
X2F		CLAMP A6-1-2 (70403)		EA	2	*	*	*	*	*	*	*	*	82	2
X2F		ELBOW, AIR STRAINER ADAPTER 332424 (23382)		EA	1									82	3
M F		HOSE, RUBBER: ELBOW MTG MANUFACTURE FROM:		EA	1									82	4
P F		HOSE RUBBER 2 1/4 IN. REQUIRED		FT	V	*	*	*	*	*	*	*	*	82	
P F	5306-225-8504	BOLT, MACHINE: STRAINER MTG, 5/16-18 X 2 IN. LG		EA	2	*	*	*	*	*	*	*	*	82	5
P F	5310-959-4679	WASHER, LOCK: STRAINER MTG, 5/16 IN.		EA	1	*	*	*	*	*	*	*	*	82	6
X2F		STRAINER, AIR		EA	1									82	7
P F	5306-225-8508	BOLT, MACHINE: GOVERNOR MTG, 5/16-18 X 3 IN. LG		EA	2	*	*	*	*	*	*	*	*	82	8
P F	5310-959-4679	WASHER, LOCK: GOVERNOR MTG, 5/16 IN.		EA	2	*	*	*	*	*	*	*	*	82	9
P F		GOVERNOR, AIR 277192 (06853)		EA	1	*	*	*	*	*	*	*	*	82	10
P F		COVER, RUBBER 240347 (06853)		EA	1	*	*	*	*	*	*	*	*	82	11
P F		PLUG, PIPE: GOVERNOR, 1/8 IN. NPT 233410 (06853)		EA	4	*	*	*	*	*	*	*	*	82	12

(1) SMR CODE	(2) FEDERAL STOCK NUMBER	(3) DESCRIPTION REF NUMBER & MFR CODE	USABLE ON CODE	(4) UNIT OF MEAS	(5) QTY INC IN UNIT	(6) 30-DAY DS MAINT ALLOWANCE (a) 1-20	(b) 21-50	(c) 51-100	(7) 30-DAY GS MAINT ALLOWANCE (a) 1-20	(b) 21-50	(c) 51-100	(8) 1-YR ALW PER 100 EQUIP CNTGY	(9) DEPOT MAINT ALW PER 100 EQUIP	(10) ILLUSTRATION (a) FIG. NO.	(b) ITEM NO.
X1		GOVERNOR 276060 (06853)		EA	1									82	13
P O		HOSE ASSEMBLY, RUBBER: BLOCK TO COMPRESSOR 5109116 (72582)		EA	1	*	*	*	*	*	*	*	*	82	14
P O		HOSE ASSEMBLY: COMPRESSOR TO RADIATOR		EA	1	*	*	*	*	*	*	*	*	82	15
P O		HOSE ASSEMBLY, RUBBER: COMPRESSOR TO THERMOSTAT HOUSING 5133775 (72582)		EA	1	*	*	*	*	*	*	*	*	82	16
P O		HOSE ASSEMBLY: DRAIN		EA	1	*	*	*	*	*	*	*	*	82	17
P F	5306-225-9081	BOLT, MACHINE: COMPRESSOR BRACKET TO ENGINE BLOCK, 5/16-18 X 1 1/4 IN. LG		EA	1	*	*	*	*	*	*	*	*	82	18
P F	5310-959-4679	WASHER, LOCK: COMPRESSOR BRACKET TO ENGINE BLOCK, 5/16 IN.		EA	1	*	*	*	*	*	*	*	*	82	19
P F	5305-269-3213	SCREW, CAP, HEXAGON HEAD: COMPRESSOR BRACKET TO ENGINE BLOCK, 3/8-16 X 1 1/4 IN. LG		EA	3	*	*	*	*	*	*	*	*	82	20
P F	5310-680-7297	WASHER, LOCK: COMPRESSOR BRACKET TO ENGINE BLOCK, 3/8 IN.		EA	3	*	*	*	*	*	*	*	*	82	21
P F	5310-833-3340	WASHER, FLAT: COMPRESSOR BRACKET TO ENGINE, 3/8 IN.		EA	5	*	*	*	*	*	*	*	*	82	22
X2F		BRACKET, UPPER: COMPRESSOR MTG		EA	1									82	23
P O	4820-276-9041	COCK, DRAIN MS35782-6 (96906)		EA	1	*	*	*	*	*	*	*	*	82	24
X20		TUBE ASSEMBLY: DRAIN		EA	1									82	25
P O		CONNECTOR, PIPE TO TUBE		EA	1	*	*	*	*	*	*	*	*	82	26
X2F		CONNECTOR, PIPE: DRAIN LINE		EA	1									82	27
P O	4730-221-6215	ELBOW, PIPE TO TUBE: 137425 (72582)		EA	2	*	*	*	*	*	*	*	*	82	28
P O		TEE, STREET 144136 (72582)		EA	1	*	*	*	*	*	*	*	*	82	29
P O	4730-221-3905	ELBOW, STREET 118757 (72582)		EA	1	*	*	*	*	*	*	*	*	82	30
P O		ELBOW, STREET 144056 (72582)		EA	1	*	*	*	*	*	*	*	*	82	31
P O		ELBOW PIPE TO TUBE: DRAIN LINE		EA	1	*	*	*	*	*	*	*	*	82	32
P O	4730-014-2269	BUSHING, PIPE 142269 (72582)		EA	2	*	*	*	*	*	*	*	*	82	33
P O		CONNECTOR, PIPE TO HOSE: DRAIN LINE		EA	1	*	*	*	*	*	*	*	*	82	34
P F	5310-012-0370	NUT, PLAIN, HEXAGON: COMPRESSOR MTG, 7/16-20 THD SIZE		EA	4	*	*	*	*	*	*	*	*	82	35
P F	5310-209-6074	WASHER, LOCK: COMPRESSOR MTG, 7/16 IN.		EA	4	*	*	*	*	*	*	*	*	82	36
P F	5305-710-4194	SCREW, CAP, HEXAGON HEAD: COMPRESSOR MTG, 7/16-20 X 1 1/2 IN. LG		EA	4	*	*	*	*	*	*	*	*	82	37
X2F		BRACKET, MOUNTING: COMPRESSOR		EA	1									82	38

(1) SMR CODE	(2) FEDERAL STOCK NUMBER	(3) DESCRIPTION REF NUMBER & MFR CODE	USABLE ON CODE	(4) UNIT OF MEAS	(5) QTY INC IN UNIT	(6) 30-DAY DS MAINT ALLOWANCE (a) 1-20	(b) 21-50	(c) 51-100	(7) 30-DAY GS MAINT ALLOWANCE (a) 1-20	(b) 21-50	(c) 51-100	(8) 1-YR ALW PER 100 EQUIP CNTGY	(9) DEPOT MAINT ALW PER 100 EQUIP	(10) ILLUSTRATION (a) FIG. NO.	(b) ITEM NO.
P F R	4310-494-9335	COMPRLSSOR ASSEMBLY, AIR 282076 (06853)		EA	1	*	*	*	*	*	*	*	*	82	39
P F	4730-554-7540	PLUG, PIPE: BODY 1/4 IN. NPT 230576 (06853)		EA	1	*	*	*	*	*	*	*	*	83	1
P F	4730-014-7863	PLUG, PIPE: HEAD AND BODY, 3/8 IN. NPT 233057 (06853)		EA	6	*	*	*	*	*	*	*	*	83	2
P F	2530-531-5941	GASKET, STRAINER 236170 (06853)		EA	1	*	*	*	*	*	*	*	*	83	3
P F	4310-531-3197	GASKET, GOVERNOR 236577 (06853)		EA	1	*	*	*	*	*	*	*	*	83	4
P F	5306-680-7610	BOLT, MACHINE, HEXAGON HEAD: CYLINDER HEAD MTG, 5/16-18 X 2 3/4 IN. LG 237696 (06853)		EA	8	*	*	*	*	*	*	*	*	83	5
P F		SCREW, CAP, HEXAGON HEAD: CYLINDER HEAD MTG, 5/16-18 X 2 3/4 IN. LG 237936 (06853)		EA	2	*	*	*	*	*	*	*	*	83	6
P F	5310-269-5895	WASHER, FLAT: CYLINDER HEAD MTG, 5/16 IN. 232850 (06853)		EA	2	*	*	*	*	*	*	*	*	83	7
P F	5340-200-4885	SPRING, INLET VALVE 236126 (06853)		EA	2	*	*	*	*	*	*	*	*	83	8
P F	2530-627-6576	GASKET, CYLINDER HEAD 238634 (06853)		EA	1	*	*	*	*	*	*	*	*	83	9
P F		CYLINDER HEAD ASSEMBLY 227453 (06853)		EA	1	*	*	*	*	*	*	*	*	83	10
X1		NUT 236215 (06853)		EA	2									83	11
P F	2530-246-7012	SPRING, DISCHARGE VALVE 210468 (06853)		EA	2	*	*	*	*	*	*	*	*	83	12
P F	2530-426-8386	VALVE, DISCHARGE 230935 (06853)		EA	2	*	*	*	*	*	*	*	*	83	13
P F	2815-893-3216	SEAT, DISCHARGE VALVE 237291 (06853)		EA	2	*	*	*	*	*	*	*	*	83	1
P F	2990-740-7605	INSERT, SPRING 240143 (06853)		EA	2	*	*	*	*	*	*	*	*	83	
P F	5330-842-8212	SEAT, SPRING: INLET VALVE 240142 (06853)		EA	2	*	*	*	*	*	*	*	*	83	16
X1		BODY 237695 (06853)		EA	1									83	17
P F	2530-869-7355	GUIDE, INLET VALVE 239395 (06853)		EA	2	*	*	*	*	*	*	*	*	83	18
P F	2530-515-1236	VALVE, INLET 236125 (06853)		EA	2	*	*	*	*	*	*	*	*	83	19
P F	5305-269-3211	SCREW, CAP, HEXAGON HEAD: BLOCK MTG, 3/8-16 X 1 IN. LG 210897 (06853)		EA	6	*	*	*	*	*	*	*	*	83	20
P F	5310-085-3896	BLOCK MTG, 3/8 IN. 237686 (06853)		EA	6	*	*	*	*	*	*	*	*	83	21
P F		GASKET: CYLINDER BLOCK 235416 (06853)		EA	1	*	*	*	*	*	*	*	*	83	22
P2F	2530-653-8988	CYLINDER BLOCK, COMPRESSOR 228238 (06853)		EA	1	*	*	*	*	*	*	*	*	83	23

(1) SMR CODE	(2) FEDERAL STOCK NUMBER	(3) DESCRIPTION REF NUMBER & MFR CODE	USABLE ON CODE	(4) UNIT OF MEAS	(5) QTY INC IN UNIT	(6) 30-DAY DS MAINT ALLOWANCE (a) 1-20	(b) 21-50	(c) 51-100	(7) 30-DAY GS MAINT ALLOWANCE (a) 1-20	(b) 21-50	(c) 51-100	(8) 1-YR ALW PER 100 EQUIP CNTGY	(9) DEPOT MAINT ALW PER 100 EQUIP	(10) ILLUSTRATION (a) FIG. NO.	(b) ITEM NO.
X1		SADDLE 240024 (06853)		EA	1									83	24
P F	4310-530-7356	SPRING 239972 (06853)		EA	1	*	*	*	*	*	*	*	*	83	25
P F		GUIDE, PLUNGER 240022 (06853)		EA	2	*	*	*	*	*	*	*	*	83	26
P F	4310-081-9200	PLUNGER 240023 (06853)		EA	2	*	*	*	*	*	*	*	*	83	27
P F	2530-620-6880	PISTON ASSEMBLY, UNLOADER 229875 (06853)		EA	2	*	*	*	*	*	*	*	*	83	28
P F	2530-601-2854	SEAT, SPRING 238491 (06853)		EA	1	*	*	*	*	*	*	*	*	83	29
X1		BODY ASSEMBLY 228233 (06853)		EA	1									83	30
P F	5330-641-6449	GASKET, FLANGE 211376 (06853)		EA	1	*	*	*	*	*	*	*	*	84	1
P F	5310-208-3508	NUT, CASTELLATED: HEXAGON PULLEY MTG, 202926 (06853)		EA	1	*	*	*	*	*	*	*	*	84	2
P F	5315-059-2285	KEY, WOODRUFF: PULLEY 211347 (06853)		EA	1	*	*	*	*	*	*	*	*	84	3
P F	2530-318-1162	RING, PISTON 234811 (06853)		EA	6	*	*	*	*	*	*	*	*	84	4
P F	2530-318-1164	RING, PISTON 234810 (06853)		EA	4	*	*	*	*	*	*	*	*	84	5
P F	2530-604-9891	LOCKWIRE, PISTON PIN 236169 (06853)		EA	2	*	*	*	*	*	*	*	*	84	6
P F		PISTON AND PIN ASSEMBLY 226103 (06853)		EA	2	*	*	*	*	*	*	*	*	84	7
X1		PIN 236168 (06853)		EA	2									84	8
X1		PISTON 236167 (06853)		EA	2									84	9
P F	3805-797-4617	ROD, CONNECTING 229084 (06853)		EA	2	*	*	*	*	*	*	*	*	84	10
P F	5306-834-8450	BOLT, MACHINE: ROD CAP 238598 (06853)		EA	4	*	*	*	*	*	*	*	*	84	11
P F	2530-842-8213	INSERT, BEARING 238596 (13841)		EA	4	*	*	*	*	*	*	*	*	84	12
X1		CAP 238595 (06853)		EA	2	*	*	*	*	*	*	*	*	84	13
X1		ROD 238594 (06853)		EA	2									84	14
P F	5310-792-9785	WASHER, LOCK, TAB: CONNECTING, ROD BOLT 238597 (06853)		EA	4	*	*	*	*	*	*	*	*	84	15
P F	5305-082-5161	SCREW, CAP, HEXAGON HEAD: REAR COVER MTG, 5/16-18 X 7/8 IN. LG 237687 (06853)		EA	4	*	*	*	*	*	*	*	*	84	16
P F	5310-085-3891	WASHER, LOCK: REAR COVER MTG, 5/16 IN. 237648 (06853)		EA	5	*	*	*	*	*	*	*	*	84	17
P F	5310-981-8530	WASHER, THRUST: BEARING 240576 (06853)		EA	1	*	*	*	*	*	*	*	*	84	18

(1) SMR CODE	(2) FEDERAL STOCK NUMBER	(3) DESCRIPTION REF NUMBER & MFR CODE	USABLE ON CODE	(4) UNIT OF MEAS	(5) QTY INC IN UNIT	(6) 30-DAY OS MAINT ALLOWANCE (a) 1-20	(b) 21-50	(c) 51-100	(7) 30-DAY GS MAINT ALLOWANCE (a) 1-20	(b) 21-50	(c) 51-100	(8) 1-YR ALW PER 100 EQUIP CNTGY	(9) DEPOT MAINT ALW PER 100 EQUIP	(10) ILLUSTRATION (a) FIG. NO.	(b) ITEM NO
P F	5330-580-5342	PACKING, PREFORMED: REAR COVER 239189 (06853)		EA	1	*	*	*	*	*	*	*	*	84	1
X2F		COVER ASSEMBLY: REAR END 275969 (06853)		EA	1									84	2
P F	2530-990-2255	BEARING, CRANKSHAFT 240745 (06853)		EA	1	*	*	*	*	*	*	*	*	84	2
X1		BODY 241054 (06853)		EA	1									84	2
P F	5306-632-1662	BOLT, MACHINE, HEXAGON HEAD: REAR COVER MTG, 5/16-18 X 3/4 IN. LG 237315 (06853)		EA	4	*	*	*	*	*	*	*	*	84	2
P F	5310-085-3891	WASHER, LOCK: REAR COVER MTG, 5/16 IN. 237648 (06853)		EA	4	*	*	*	*	*	*	*	*	84	2
P F	5330-080-0309	SEAL, PLAIN, ENCASED 243053 (06853)		EA	1	*	*	*	*	*	*	*	*	84	2
X2F	2530-353-0461	COVER, FRONT END 230920 (06853)		EA	1									84	2
P F	2530-426-8383	GASKET: COVER 235425 (06853)		EA	1	*	*	*	*	*	*	*	*	84	2
P F	3110-554-3272	BEARING, MAIN 3L11M46 (29337)		EA	1	*	*	*	*	*	*	*	*	84	2
P F	2530-437-0476	CRANKSHAFT, COMPRESSOR 244461 (06853)		EA	1	*	*	*	*	*	*	*	*	84	2
X1		CRANKCASE 237395 (06853)		EA	1									84	3
P O		FITTING, LUBRICATION: TACHOMETER DRIVE MS15003-3 (96906)		EA	1	*	*	*	*	*	*	*	*	85	
P O	2520-695-7827	ADAPTER ASSEMBLY: TACHOMETER DRIVE 1565192 (72582)		EA	1	*	*	*	*	*	*	*	*	85	
P O	5315-597-5387	KEY: ADAPTER 1561509 (72582)		EA	1	*	*	*	*	*	*	*	*	85	
P O	5310-012-1917	NUT, PLAIN, HEXAGON: ADAPTER MTG, 5/16-24 THD SIZE 121917 (72582)		EA	2	*	*	*	*	*	*	*	*	85	
P O	5310-407-9566	WASHER, LOCK: ADAPTER MTG, 5/16 IN. MS35338-45 (96906)		EA	2	*	*	*	*	*	*	*	*	85	
P O		ADAPTER, TACHOMETER 5135945 (72582)		EA	1	*	*	*	*	*	*	*	*	85	
P O		SEAL, ADAPTER 5135820 (72582)		EA	1	*	*	*	*	*	*	*	*	85	
P O	5305-017-9882	SCREW, CAP, HEXAGON HEAD: COVER MTG, 1/2-13 X 1 1/8 IN. 179882 (72582)		EA	4	*	*	*	*	*	*	*	*	85	
P O	5310-584-5272	WASHER, LOCK: COVER MTG, 1/2 IN. 103323 (72582)		EA	4	*	*	*	*	*	*	*	*	85	
P O	5305-069-5572	SCREW, CAP, HEXAGON HEAD: COVER MTG, 7/16-14 X 7/8 IN. LG 179857 (72582)		EA	1	*	*	*	*	*	*	*	*	85	

(1) SMR CODE	(2) FEDERAL STOCK NUMBER	(3) DESCRIPTION REF NUMBER & MFR CODE	USABLE ON CODE	(4) UNIT OF MEAS	(5) QTY INC IN UNIT	(6) 30-DAY OS MAINT ALLOWANCE (a) 1-20	(b) 21-50	(c) 51-100	(7) 30-DAY GS MAINT ALLOWANCE (a) 1-20	(b) 21-50	(c) 51-100	(8) 1-YR ALW PER 100 EQUIP CNTGY	(9) DEPOT MAINT ALW PER 100 EQUIP	(10) ILLUSTRATION (a) FIG. NO.	(b) ITEM NO.
P O	5310-595-6852	WASHER, FLAT: COVER MTG, 5150568 (72582) (ALSO PART OF PARTS KIT, FSN 2815-947-2951)		EA	1	*	*	*	*	*	*	*	*	85	11
X20	2815-922-2000	COVER ASSEMBLY 5123118 (72582)		EA	1									85	12
X1		STUD 5155854 (72582)		EA	2									85	13
P O		GASKET: COVER 5135935 (72582)		EA	1	*	*	*	*	*	*	*	*	85	14
P O		SHAFT, DRIVE 5135936 (72582)		EA	1	*	*	*	*	*	*	*	*	85	15
P F	5306-613-9396	BOLT, ASSEMBLED WASHER: FUEL PUMP MTG, 5/16-18 X 7/8 IN. LG 5118219 (72582)		EA	3	*	*	*	*	*	*	*	*	86	1
P F	2910-465-1336	PUMP KIT: FUEL TRANSFER 5197769 (72582)		EA	1	*	*	*	*	*	*	*	*	86	2
X1		GASKET: FUEL PUMP 5150193 (72582) (PART OF PARTS KIT, FSN 2815-947-2951)		EA	1									86	3
X1		PUMP, FUEL 5134716 (72582)		EA	1									86	4
P F	2910-524-7862	FORK, COUPLING: FUEL PUMP DRIVE 5150199 (72582)		EA	1	*	*	*	*	*	*	*	*	86	5
P F	5306-822-3685	BOLT, MACHINE, HEXAGON HEAD: FUEL PUMP DRIVE ADAPTER, 1/4-20 X 5/8 IN. LG 9409073 (72582)		EA	2	*	*	*	*	*	*	*	*	87	1
P F	2910-999-2351	ADAPTER: FUEL PUMP DRIVE 5125775 (72582)		EA	1	*	*	*	*	*	*	*	*	87	2
P F	5306-846-3246	BOLT, MACHINE, HEXAGON HEAD: HUB MTG, 1/2-13 X 2 3/4 IN. LG 9409203 (72582)		EA	1	*	*	*	*	*	*	*	*	87	3
P F	2910-999-2396	WASHER, RETAINING: HUB 5126672 (72582)		EA	1	*	*	*	*	*	*	*	*	87	4
P F	2910-999-2397	WASHER, THRUST: HUB 5125771 (72582)		EA	2	*	*	*	*	*	*	*	*	87	5
X2F	2910-999-2352	HUB, DRIVE GEAR 5125774 (72582)		EA	1									87	6
X2F	2910-999-2353	GEAR ASSEMBLY 5125768 (72582)		EA	1									87	7
X1		BUSHING 5196842 (72582)		EA	1									87	8
P O	2805-980-1543	SPRING, HELECAL, EXTENSION: THROTTLE BOOSTER 5125716 (72582)		EA	1	*	*	*	*	*	*	*	*	88	1
P O	5310-012-3221	NUT, PLAIN, HEXAGON: THROTTLE BOOSTER ADJUSTING BOLT, 3/8-16 THD SIZE 123221 (72582)		EA	2	*	*	*	*	*	*	*	*	88	2
P O	5306-021-2548	EYE-BOLT: THROTTLE BOOSTER ADJUSTING 5134051 (72582)		EA	1	*	*	*	*	*	*	*	*	88	3
P O	5310-531-1194	NUT, PLAIN, HEXAGON: THROTTLE BOOSTER BRACKET MTG, 3/8-24 THD SIZE		EA	2	*	*	*	*	*	*	*	*	88	4

(1) SMR CODE	(2) FEDERAL STOCK NUMBER	(3) DESCRIPTION REF NUMBER & MFR CODE	USABLE ON CODE	(4) UNIT OF MEAS	(5) QTY INC IN UNIT	(6) 30-DAY OS MAINT ALLOWANCE (a) 1-20	(b) 21-50	(c) 51-100	(7) 30-DAY GS MAINT ALLOWANCE (a) 1-20	(b) 21-50	(c) 51-100	(8) 1-YR ALW PER 100 EQUIP CNTGY	(9) DEPOT MAINT ALW PER 100 EQUIP	(10) ILLUSTRATION (a) FIG. NO.	(b) ITEM NO.
P 0	5310-261-7340	WASHER, LOCK: THROTTLE BOOSTER BRACKET MTG, 3/8 IN. 103321 (72582)		EA	2	*	*	*	*	*	*	*	*	88	5
P 0	5306-604-8012	BOLT, MACHINE, HEXAGON HEAD: THROTTLE BOOSTER BRACKET MTG, 3/8-24 X 3 3/4 IN. LG 186311 (72582)		EA	2	*	*	*	*	*	*	*	*	88	6
X20	2815-810-3824	BRACKET, SPRING: THROTTLE BOOSTER 5134476 (72582)		EA	1									88	7
P 0	5305-225-3840	SCREW, CAP, HEXAGON HEAD: REMOTE CONTROL LEVER, 1/4-20 X 7/8 IN. LG 454813 (72582)		EA	1	*	*	*	*	*	*	*	*	88	8
P 0	5310-582-5965	WASHER, LOCK: REMOTE CONTROL LEVER, 1/4 IN. MS35338-44 (96906)		EA	1	*	*	*	*	*	*	*	*	88	9
X20	2815-922-2013	LEVER, REMOTE CONTROL 5179112 (72582)		EA	1									88	10
P 0	5305-225-3840	BOLT, MACHINE: BOOSTER SPRING HANGER, 1/4-20 X 7/8 IN. LG 454813 (72582)		EA	1	*	*	*	*	*	*	*	*	88	11
P 0	5310-582-5965	WASHER, LOCK: BOOSTER SPRING HANGER, 1/4 IN. MS35338-44 (96906)		EA	1	*	*	*	*	*	*	*	*	88	12
X20		HANGER, THROTTLE BOOSTER SPRING 5133026 (72582)		EA	1									88	13
P 0		NUT, SPECIAL: SPRING HANGER, 5/16-24 THD SIZE 5132934 (72582)		EA	1	*	*	*	*	*	*	*	*	88	14
X20		BOLT, SPECIAL: SPRING HANGER, 5/16-24 X 5/8 IN. LG 5171045 (72582)		EA	1									88	
P 0	5310-012-2198	NUT, PLAIN, HEXAGON: SOLENOID EYE TO LEVER, 5/16-24 THD SIZE 122198 (72582)		EA	1	*	*	*	*	*	*	*	*	89	
P 0	5306-225-9088	BOLT, MACHINE: SOLENOID EYE TO LEVER, 5/16-24 X 7/8 IN. LG MS90726 (96906)		EA	1	*	*	*	*	*	*	*	*	89	2
P 0	5305-855-0984	SCREW, MACHINE: SOLENOID BRACKET MTG, 1/4-20 X 7/8 IN. LG MS35265-82 (96906)		EA	4	*	*	*	*	*	*	*	*	89	3
P 0	5310-582-5965	WASHER, LOCK: SOLENOID BRACKET MTG, 1/4 IN. MS35338-44 (96906)		EA	4	*	*	*	*	*	*	*	*	89	4
P 0	5310-639-1055	NUT, PLAIN, HEXAGON: SOLENOID MTG, 1/4-28 THD SIZE		EA	4	*	*	*	*	*	*	*	*	89	5
P 0	5310-582-5965	WASHER, LOCK: SOLENOID MTG, 1/4 IN. MS35338-44 (96906)		EA	4	*	*	*	*	*	*	*	*	89	6
P 0	5305-068-0506	SCREW, CAP, HEXAGON HEAD: SOLENOID MTG, 1/4-28 X 3/4 IN. LG MS90726-6 (96906)		EA	4	*	*	*	*	*	*	*	*	89	7
X20		BRACKET, SOLENOID 5138707 (72582)		EA	1									89	8

(1) MR DE	(2) FEDERAL STOCK NUMBER	(3) DESCRIPTION REF NUMBER & MFR CODE	USABLE ON CODE	(4) UNIT OF MEAS	(5) QTY INC IN UNIT	(6) 30-DAY DS MAINT ALLOWANCE (a) 1-20	(b) 21-50	(c) 51-100	(7) 30-DAY GS MAINT ALLOWANCE (a) 1-20	(b) 21-50	(c) 51-100	(8) 1-YR ALW PER 100 EQUIP CNTGY	(9) DEPOT MAINT ALW PER 100 EQUIP	(10) ILLUSTRATION (a) FIG. NO.	(b) ITEM NO.
		EYE, SOLENOID 5100004 (72582)		EA	1	*	*	*	*	*	*	*	*	89	9
	5310-297-8836	NUT, JAM: SOLENOID EYE, 1/4-28 THD SIZE 120613 (24617)		EA	1	*	*	*	*	*	*	*	*	89	10
	2920-264-4173	SOLENOID, THROTTLE CONTROL 1118191 (16764)		EA	1	*	*	*	*	*	*	*	*	89	11
	5305-225-3843	SCREW, CAP, HEXAGON HEAD: LEVER, 1/4-20 X 1 IN. LG 186647 (72582)		EA	1	*	*	*	*	*	*	*	*	89	12
	5310-582-5965	WASHER, LOCK: LEVER, 1/4 IN. MS35338-44 (96906)		EA	1	*	*	*	*	*	*	*	*	89	13
	2990-363-8093	LEVER, REMOTE CONTROL 5158432 (72582)		EA	1									89	14
F	5305-018-6289	SCREW, CAP, HEXAGON HEAD: COVER MTG, 3/8-16 X 5 IN. LG 186289 (72582)		EA	4	*	*	*	*	*	*	*	*	90	1
F	5306-180-2689	BOLT, MACHINE: COVER AND THROTTLE SUPPORT MTG, 3/8-16 X 5 1/2 IN. LG		EA	2	*	*	*	*	*	*	*	*	90	2
F	5310-167-0721	WASHER, LOCK: BLOWER DRIVE COVER, 3/8 IN.		EA	4	*	*	*	*	*	*	*	*	90	3
F	2920-416-4070	WASHER, SPACER: BLOWER DRIVE COVER SCREW, 3/8 ID X 1/8 IN. THK 5164294 (72582)		EA	4	*	*	*	*	*	*	*	*	90	4
		WASHER, FLAT 5152148 (72582) (PART OF BLOWER KIT, P/N 5197730 (72582))		EA	2									90	5
2F	2815-922-2018	COVER, SUPPORT: BLOWER DRIVE 5121343 (72582)		EA	1									90	6
F	2990-074-1925	GASKET: COVER, BLOWER DRIVE 5121344 (72582) (ALSO PART OF PARTS KIT, FSN 2815-947-2951)		EA	1	*	*	*	*	*	*	*	*	90	7
F	2990-780-5234	GASKET: SUPPORT 5121359 (72582) (ALSO PART OF PARTS KIT, FSN 2815-947-2951)		EA	1	*	*	*	*	*	*	*	*	90	8
F	5340-740-1424	RING, RETAINING: BLOWER DRIVE SHAFT 9414044 (72582)		EA	1	*	*	*	*	*	*	*	*	90	9
F	2990-789-1005	SHAFT, BLOWER DRIVE 5109771 (72582)		EA	1	*	*	*	*	*	*	*	*	90	10
F	5340-780-8112	RING, RETAINING: GEAR HUB 9411765 (72582)		EA	1	*	*	*	*	*	*	*	*	90	11
F	6115-055-0829	WASHER, THRUST: GEAR HUB 5119285 (72582)		EA	1	*	*	*	*	*	*	*	*	90	12
2F		GEAR, HELICAL: BLOWER DRIVE 5116378 (72582)		EA	1									90	13
F	5315-616-5525	KEY, WOODRUFF: DRIVE GEAR 124546 (72582)		EA	1	*	*	*	*	*	*	*	*	90	14
2F	2815-921-5345	HUB, BLOWER 5116418 (72582)		EA	1									90	15
F	5340-237-8327	PLUG, EXPANSION 5152462 (72582)		EA	1	*	*	*	*	*	*	*	*	90	16
F	2990-930-3110	BEARING, CARRIER SHAFT 907674 (72582)		EA	1	*	*	*	*	*	*	*	*	90	17

(1) SMR CODE	(2) FEDERAL STOCK NUMBER	(3) DESCRIPTION REF NUMBER & MFR CODE	USABLE ON CODE	(4) UNIT OF MEAS	(5) QTY INC IN UNIT	(6) 30-DAY OS MAINT ALLOWANCE (a) 1-20	(b) 21-50	(c) 51-100	(7) 30-DAY GS MAINT ALLOWANCE (a) 1-20	(b) 21-50	(c) 51-100	(8) 1-YR ALW PER 100 EQUIP CNTGY	(9) DEPOT MAINT ALW PER 100 EQUIP	(10) ILLUSTRATION (a) FIG. NO.	(b) ITEM NO.
X2F	2930-866-9382	SUPPORT, BLOWER 5129168 (72582)		EA	1									90	18
P F	2815-792-8252	BOLT, LOCK: FLYWHEEL MTG, 1/2-20 X 1 11/16 IN. LG 9412018 (72582)		EA	6	*	*	*	*	*	*	*	*	91	1
P F	2815-074-1932	PLATE, SCUFF, FLY WHEEL 5126671 (72582)		EA	1	*	*	*	*	*	*	*	*	91	2
P2F	2815-490-5439	FLYWHEEL ASSEMBLY 5133503 (72582)		EA	1	*	*	*	*	*	*	*	*	91	3
P F	5306-899-2139	BOLT, MACHINE: HOUSING MTG, 5/16-18 X 2 1/2 IN. LG 9409126 (72582)		EA	2	*	*	*	*	*	*	*	*	91	4
P F	5306-053-8378	BOLT, MACHINE: HOUSING MTG, 3/8-16 X 2 1/2 IN. LG 9414215 (72582)		EA	4	*	*	*	*	*	*	*	*	91	5
P F	5305-269-3218	SCREW, CAP, HEXAGON HEAD: HOUSING MTG, 3/8-16 X 2 1/2 IN. LG 179849 (72582)		EA	8	*	*	*	*	*	*	*	*	91	6
P F	5305-269-3219	SCREW, CAP, HEXAGON HEAD: HOUSING MTG, 3/8-16 X 2 3/4 IN. LG 179850 (72582)		EA	2	*	*	*	*	*	*	*	*	91	7
P F	5305-206-6786	SCREW, CAP, HEXAGON HEAD: HOUSING MTG, 3/8-16 X 3 3/4 IN. LG 191249 (72582)		EA	6	*	*	*	*	*	*	*	*	91	8
P F	5305-269-2815	SCREW, CAP, HEXAGON HEAD: HOUSING MTG, 3/8-24 X 3 1/4 IN. LG 186309 (72582)		EA	2	*	*	*	*	*	*	*	*	91	9
P F	5310-261-7340	WASHER, LOCK: FLYWHEEL HOUSING MTG, 3/8 IN. 103321 (72582)		EA	18	*	*	*	*	*	*	*	*	91	10
P F		GASKET: FLYWHEEL HOUSING 5137470 (72582) (ALSO PART OF PARTS KIT, FSN 2815-947-2951)		EA	1	*	*	*	*	*	*	*	*	91	11
P F	5330-202-4167	WASHER, NONMETALLIC: 5152904 (72582) (ALSO PART OF PARTS KIT, FSN 2815-947-2951)		EA	1	*	*	*	*	*	*	*	*	91	12
P O	4730-289-5176	PLUG, PIPE: FLYWHEEL HOUSING, 1/2 IN. NPT 103880 (72582)		EA	1	*	*	*	*	*	*	*	*	91	13
X2F		PLUG, EXPANSION 1 3/4 IN.		EA	1									91	14
P F	5330-477-4761	SEAL, PLAIN, ENCASED 5116229-8 (72582)		EA	1	*	*	*	*	*	*	*	*	91	15
X2F		HOUSING, FLYWHEEL 5132282 (72582)		EA	1									91	16
P F	2990-780-5233	GASKET: GOVERNOR HOUSING TO FLYWHEEL HOUSING 5121345 (72582) (ALSO PART OF PARTS KIT, FSN 2815-947-2951 AND REPAIR KIT FSN 5197730)		EA	1	*	*	*	*	*	*	*	*	92	1
P F	5305-269-3219	SCREW, CAP, HEXAGON HEAD: GOVERNOR HOUSING TO BLOWER, 3/8-16 X 2 3/4 IN. LG 179850 (72582)		EA	6	*	*	*	*	*	*	*	*	92	2

(1) SMR CODE	(2) FEDERAL STOCK NUMBER	(3) DESCRIPTION REF NUMBER & MFR CODE	USABLE ON CODE	(4) UNIT OF MEAS	(5) QTY INC IN UNIT	(6) 30-DAY DS MAINT ALLOWANCE (a) 1-20	(b) 21-50	(c) 51-100	(7) 30-DAY GS MAINT ALLOWANCE (a) 1-20	(b) 21-50	(c) 51-100	(8) 1-YR ALW PER 100 EQUIP CNTGY	(9) DEPOT MAINT ALW PER 100 EQUIP	(10) ILLUSTRATION (a) FIG. NO.	(b) ITEM NO.
P F	5310-261-7340	WASHER, LOCK: GOVERNOR HOUSING TO BLOWER 3/8 IN. 103321 (72582)		EA	6	*	*	*	*	*	*	*	*	92	3
P F	4730-356-4702	CLAMP, HOSE 111610 (72582) (ALSO PART OF REPAIR KIT FSN 5197730)		EA	4	*	*	*	*	*	*	*	*	92	4
P F	2990-789-4863	HOSE, GOVERNOR CONTROL: LEFT BANK 5129705 (72582) (ALSO PART OF REPAIR KIT, FSN 5197730)		EA	1	*	*	*	*	*	*	*	*	92	5
P F	2990-789-4862	HOSE, GOVERNOR CONTROL: RIGHT BANK 5129706 (72582) (ALSO PART OF REPAIR KIT, FSN 5197730)		EA	1	*	*	*	*	*	*	*	*	92	5
X2F	2990-999-2528	HOUSING, LINK 5126072 (72582)		EA	1									92	6
P F R	2990-457-6657	GOVERNOR ASSEMBLY: ENGINE SPEED 5116009 (72582)		EA	1	*	*	*	*	*	*	*	*	92	
P H	2990-457-6658	SHAFT AND CARRIER ASSEMBLY 5122883 (72582)		EA	1				*	*	*	*	*	92	7
X1		SHAFT, STRAIGHT 5121337 (72582)		EA	1									92	8
X1		RISER 5125367 (72582)		EA	1									92	9
X1		RING 9411504 (72582)		EA	2									92	10
X1		PIN 5122786 (72582)		EA	2									92	11
X1		WEIGHT 5122775 (72582)		EA	2									92	12
X1		CARRIER 5133707 (72582)		EA	1									92	13
P H	5305-780-8105	SCREW, MACHINE: COVER MTG, 1/4-20 X 5/8 IN. LG 5183701 (72582)		EA	1				*	*	*	*	*	92	14
P H		SCREW, MACHINE: COVER MTG, 1/4-20 X 3/4 IN. LG 5126792 (72582)		EA	1				*	*	*	*	*	92	14
P H	5310-582-5965	WASHER, LOCK: COVER MTG, 1/4 IN. MS35338-44 (96906)		EA	2				*	*	*	*	*	92	15
P H	2910-922-2428	COVER ASSEMBLY, TOP 5126641 (72582)		EA	1				*	*	*	*	*	92	16
X1		RING 5174429 (72582)		EA	1									92	17
X1		WASHER 5153060 (72582)		EA	2									92	18
X1		RING 5197151 (72582)		EA	1									92	19
X1		PACKING 5176557 (72582)		EA	1									92	20
X1		SHAFT ASSEMBLY 5117933 (72582)		EA	1									92	21
X1		BUSHING 5127591 (72582)		EA	1									92	22

(1) SMR CODE	(2) FEDERAL STOCK NUMBER	(3) DESCRIPTION REF NUMBER & MFR CODE	USABLE ON CODE	(4) UNIT OF MEAS	(5) QTY INC IN UNIT	(6) 30-DAY OS MAINT ALLOWANCE (a) 1-20	(b) 21-50	(c) 51-100	(7) 30-DAY GS MAINT ALLOWANCE (a) 1-20	(b) 21-50	(c) 51-100	(8) 1-YR ALW PER 100 EQUIP CNTGY	(9) DEPOT MAINT ALW PER 100 EQUIP	(10) ILLUSTRATION (a) FIG. NO.	(b) ITEM NO.
X1		COVER ASSEMBLY: 5126645 (72582)		EA	1									92	23
P H	2990-780-5232	GASKET, COVER 5121342 (72582) (ALSO PART OF PARTS KITS, FSN 2815-947-2951 AND 2815-792-9839)		EA	1				*	*	*	*	*	92	24
P H	2815-921-5365	NUT, SELF-LOCKING, HEXAGON: BUFFET SCREW 9414568 (72582)		EA	1				*	*	*	*	*	92	25
P H	5305-021-2563	SCREW ASSEMBLY, BUFFER 5126073 (72582)		EA	1				*	*	*	*	*	92	26
P H	2815-921-5346	PIN,STRAIGHT: INJECTOR CONTROL LINK CONNECTING 5117693 (72582)		EA	2				*	*	*	*	*	92	27
P H	5340-366-0618	CLIP, RETAINING LEVER 148148 (72582)		EA	1				*	*	*	*	*	92	28
P H	5340-014-2583	CLIP, RETAINING: LEVER 142583 (72582)		EA	1				*	*	*	*	*	92	29
P H	5310-262-5429	WASHER, FLAT: LEVER 5150941 (72582)		EA	1				*	*	*	*	*	92	30
P H	5310-262-2914	WASHER, FLAT: LEVER 5151487 (72582)		EA	2				*	*	*	*	*	92	31
P H	2815-921-5354	LEVER ASSEMBLY, CONTROL 5121490 (72582)		EA	1				*	*	*	*	*	92	32
P H	3110-277-0337	ROLLER, NEEDLE MS17131-9 (72582)		EA	2				*	*	*	*	*	92	33
X2H	2815-921-5356	LEVER ASSEMBLY 5124209 (72582)		EA	1									92	34
X2H	5315-363-8100	PIN, SHOULDER, HEADLESS 5150943 (72582)		EA	1									92	35
X2H	2910-097-7753	HOUSING ASSEMBLY 6121001 (72582)		EA	1									92	36
X1		SCREW, ASSEMBLED WASHER, NO. 10-24 X 7/16 IN. LG 9421917 (72582)		EA	1									92	37
X1		SHAFT ASSEMBLY 5121458 (72582)		EA	1									92	[illegible]
X1		SETSCREW 5150898 (72582)		EA	1									92	[illegible]
X1		NUT 122161 (72582)		EA	1									92	40
X2H		PIN, SHOULDER, HEADLESS 5150943 (72582)		EA	1									92	41
X1		LEVER ASSEMBLY 5116011 (72582)		EA	1									92	42
X1		BEARING 457193 (72582)		EA	1									92	43
X1		SHAFT 5121339 (72582)		EA	1									92	44
X1		FORK 5185605 (72582)		EA	1									92	45
X1		PLUG 116337 (72582)		EA	1									92	46
X1		BEARING 954987 (72582)		EA	1									92	47

(1) SMR CODE	(2) FEDERAL STOCK NUMBER	(3) DESCRIPTION REF NUMBER & MFR CODE	USABLE ON CODE	(4) UNIT OF MEAS	(5) QTY INC IN UNIT	(6) 30-DAY OS MAINT ALLOWANCE (a) 1-20	(b) 21-50	(c) 51-100	(7) 30-DAY GS MAINT ALLOWANCE (a) 1-20	(b) 21-50	(c) 51-100	(8) 1-YR ALW PER 100 EQUIP CNTGY	(9) DEPOT MAINT ALW PER 100 EQUIP	(10) ILLUSTRATION (a) FIG. NO.	(b) ITEM NO.
X1		PLUG 9417025 (72582)		EA	1									92	48
X1		ADAPTER 5126069 (72582)		EA	2									92	49
X1		PIN 5150942 (72582)		EA	2									92	50
X1		PIN 5119314 (72582)		EA	1									92	51
X1		PIN 5116071 (72582)		EA	1									92	52
X1		PIN 141242 (72582)		EA	2									92	53
P H	5305-416-3967	SCREW, CAP, HEXAGON HEAD: VARIABLE SPEED HOUSING MTG, 5/16-18 X 3 1/2 IN LG 445520 (72582)		EA	2				*	*	*	*	*	93	1
P H	5310-407-9566	WASHER, LOCK: VARIABLE SPEED HOUSNG MTG, 5/16 IN. MS35338-45 (96906)		EA	2				*	*	*	*	*	93	2
P H	2920-250-5817	GASKET, HOUSING: VARIABLE SPEED 5152944 (72582) (ALSO PART OF REPAIR KIT, FSN 5197730)		EA	1				*	*	*	*	*	93	3
P D	2990-424-4024	PLUNGER, GOVERNOR SPRING 5152938 (72582)		EA	1							*	*	93	4
P D	5360-477-4769	SPRING, HELICAL, COMPRESSION: VARIABLE SPEED 5127397 (72582)		EA	1							*	*	93	5
P D	2910-050-9798	SHIM, ADJUSTING .01014 5136590 (72582)		EA	V							*	*	93	6
P D	2910-050-9836	SHIM, ADJUSTING .078 5136591 (72582)		EA	V							*	*	93	7
P D	2910-944-4043	RETAINER, SPRING 5137276 (72582)		EA	1							*	*	93	8
P H	2910-922-2427	HOUSING ASSEMBLY: VARIABLE SPEED SPRING 5126121 (72582)		EA	1				*	*	*	*	*	93	9
P H	5315-616-5515	KEY, WOODRUFF: CONTROL LEVERS 103904 (72582)		EA	2				*	*	*	*	*	93	10
P H	2815-797-4802	SCREW, CAP, SOCKET HEAD: IDLE ADJUSTING, 1/4-20 X 1 1/2 IN. LG 5143564 (72582)		EA	1				*	*	*	*	*	93	11
P H	5310-364-3149	NUT, PLAIN, HEXAGON: IDLE SCREW, 1/4-20 THD SIZE 274856 (72582)		EA	1				*	*	*	*	*	93	12
P H	4730-954-1281	PLUG, PIPE: SLOTTED HEAD, HOUSING, 1/4 IN. NPT 143992 (72582)		EA	1				*	*	*	*	*	93	13
P H	5305-619-5753	SETSCREW, LEVER: 5/16-24 X 1/4 IN. LG 223065 (72582)		EA	1				*	*	*	*	*	93	14
P H	5310-167-0839	WASHER, FLAT: SHAFT 5152932 (72582)		EA	2				*	*	*	*	*	93	15
X1		PACKING, PREFORMED 5176557 (72582)		EA	2									93	16
P H	3110-156-7721	BEARING, ROLLER: SHAFT MS17131-13 (96906)		EA	2				*	*	*	*	*	93	17

(1) SMR CODE	(2) FEDERAL STOCK NUMBER	(3) DESCRIPTION REF NUMBER & MFR CODE	USABLE ON CODE	(4) UNIT OF MEAS	(5) QTY INC IN UNIT	(6) 30-DAY DS MAINT ALLOWANCE (a) 1-20	(b) 21-50	(c) 51-100	(7) 30-DAY GS MAINT ALLOWANCE (a) 1-20	(b) 21-50	(c) 51-100	(8) 1-YR ALW PER 100 EQUIP CNTGY	(9) DEPOT MAINT ALW PER 100 EQUIP	(10) ILLUSTRATION (a) FIG. NO.	(b) ITE NO
X1		SHAFT 5126120 (72582)		EA	1									93	18
P H	5315-616-5515	KEY, WOODRUFF 103904 (72582)		EA	1				*	*	*	*	*	93	19
X1		LEVER 5179102 (72582)		EA	1									93	20
X1		HOUSING 5126060 (72582)		EA	1									93	21
P O	5340-491-1673	CLAMP ASSEMBLY, EXHAUST 5137620 (72582)		EA	2	*	*	*	*	*	*	*	*	94	1
P O	5310-011-4544	NUT, PLAIN, HEXAGON: MANIFOLD MTG, 7/16-20 THD SIZE 114544 (72582)		EA	8	*	*	*	*	*	*	*	*	94	2
P O	5310-595-8121	WASHER, DISHED: MANIFOLD MTG 5188273 (72582)		EA	8	*	*	*	*	*	*	*	*	94	3
P2O	2815-477-3330	MANIFOLD, EXHAUST 5128014 (72582)		EA	2	*	*	*	*	*	*	*	*	94	4
P O	2815-780-5221	GASKET: EXHAUST MANIFOLD 5116205 (72582) (ALSO PART OF PARTS KITS, FSN 2815-947-2951 AND 2815-792-9839)		EA	2	*	*	*	*	*	*	*	*	94	5
P O	2815-042-6545	CAP, OIL FILLER 5108474 (72582)		EA	1	*	*	*	*	*	*	*	*	95	1
P F	2815-074-1929	SCREW ASSEMBLY: ROCKET COVER 5100104 (72582)		EA	8	*	*	*	*	*	*	*	*	95	2
X2F	2815-089-6428	COVER, ROCKER: L H 5125355 (72582)		EA	1									95	3
P2F		COVER, ROCKER, PLAIN: R H 5170503 (72582)		EA	1	*	*	*	*	*	*	*	*	95	4
P F	2815-792-9026	GASKET: ROCKET COVER 5119457 (72582) (ALSO COMPONENT OF PARTS KITS, FSN 2815-947-2951 AND 2815-792-9839)		EA	2	*	*	*	*	*	*	*	*	95	5
P F	5305-577-5462	SCREW, CAP, HEXAGON HEAD: LIFTER BRACKET, 3/8-16 X 1 IN. LG 179839 (72582)		EA	4	*	*	*	*	*	*	*	*	95	6
P F	5310-261-7340	WASHER, LOCK: LIFTER BRACKET, 3/8 IN. 103321 (72582)		EA	4	*	*	*	*	*	*	*	*	95	7
X2F		BRACKET: FRONT LIFTER, R H 5127949 (72582)		EA	1									95	8
X2F		BRACKET: FRONT LIFTER, L H 5125488 (72582)		EA	1									95	9
P F	2910-792-8984	TUBE ASSEMBLY: INJECTOR 5116204 (72582)		EA	12	*	*	*	*	*	*	*	*	95	10
P F	4730-142-1278	ADAPTER, STRAIGHT, TUBE: INJECTOR TUBE 5152138 (72582)		EA	12	*	*	*	*	*	*	*	*	95	11
X2F	5310-193-9753	WASHER, FLAT: INJECTOR TUBE ADAPTER 5152148 (72582)		EA	12									95	12
P F	5315-839-2325	PIN, COTTER: CONTROL LINK PIN, 1/16 X 1/2 IN. LG MS24665-132 (96906)		EA	2	*	*	*	*	*	*	*	*	96	
X2F	5315-845-4232	PIN, STRAIGHT, HEADLESS: LINK TO CONTROL 114783 (72582)		EA	2									96	

(1) SMR CODE	(2) FEDERAL STOCK NUMBER	(3) DESCRIPTION REF NUMBER & MFR CODE	USABLE ON CODE	(4) UNIT OF MEAS	(5) QTY INC IN UNIT	(6) 30-DAY DS MAINT ALLOWANCE (a) 1-20	(b) 21-50	(c) 51-100	(7) 30-DAY GS MAINT ALLOWANCE (a) 1-20	(b) 21-50	(c) 51-100	(8) 1-YR ALW PER 100 EQUIP CNTGY	(9) DEPOT MAINT ALW PER 100 EQUIP	(10) ILLUSTRATION (a) FIG. NO.	(b) ITEM NO.
P F	5305-068-7837	SCREW, CAP, HEXAGON HEAD: INJECTOR TUBE BRACKET MTG, 1/4-20 X 5/8 IN. LG 186630 (72582)		EA	8	*	*	*	*	*	*	*	*	96	3
P F	5310-582-5965	WASHER, LOCK: INJECTOR TUBE, BRACKET MTG, 1/4 IN. MS35338-44 (96906)		EA	8	*	*	*	*	*	*	*	*	96	4
X2F	2815-921-5343	BRACKET: CONTROL MTG, 5116264 (72582)		EA	2									96	5
P F	6115-055-2657	SPRING, HELICAL: CONTROL, TORSION 5116265 (72582)		EA	2	*	*	*	*	*	*	*	*	96	6
P F	5305-272-2080	SCREW, MACHINE: LEVER ASSEMBLY 5176228 (72582)		EA	12	*	*	*	*	*	*	*	*	96	7
X2F	2910-775-1380	LEVER ASSEMBLY 5115322 (72582)		EA	6									96	8
P F	5305-639-8828	SCREW, CAP, HEXAGON HEAD: ROCKER ARM, 1/4-20 X 1 IN. LG 513546 (72582)		EA	4	*	*	*	*	*	*	*	*	96	9
P F	5310-582-5965	WASHER, LOCK: ROCKER ARM, 1/4 IN. MS35338-44 (96906)		EA	4	*	*	*	*	*	*	*	*	96	10
X2F	2815-301-7708	ARM, ROCKER, SHAFT 2090519 (72582)		EA	2									96	11
P F	2910-789-4875	TUBE, INJECTOR CONTROL: RIGHT BANK 5196784 (72582) (COMPONENTS SAME AS TUBE, FSN 2910-789-4876)		EA	1	*	*	*	*	*	*	*	*	96	12
P F	2910-789-4876	TUBE INJECTOR CONTROL: LEFT BANK 5196786 (72582)		EA	1	*	*	*	*	*	*	*	*	96	13
X1		PIN 142486 (72582)		EA	2									96	14
X1		ARM 5150263 (72582)		EA	2									96	15
X1		SPACER 5113359 (72582)		EA	2									96	16
X1		BRACKET 5116264 (72582)		EA	2									96	17
X1		PIN 5150259 (72582)		EA	2									96	18
X2F		SCREW, ADJUSTING: ROCKER ARM 5129913 (72582)		EA	2									96	19
P F		NUT, PLAIN, HEXAGON: ADJUSTING SCREW, 5/16-24 THD SIZE 121917 (72582)		EA	2	*	*	*	*	*	*	*	*	96	20
X2F		PLATE, ADJUSTING 5129912 (72582)		EA	2									96	21
P F	5310-050-3377	NUT, SELF-LOCKING, HEXAGON: LINK CONNECTING, 1/4-28 THD SIZE 190204 (72582)		EA	2	*	*	*	*	*	*	*	*	96	22
X2F	2990-780-5251	LINK, LOWER: GOVERNOR CONTROL 5121472 (72582)		EA	2									96	23
X2F	2990-780-5237	LINK, UPPER: GOVERNOR CONTROL, L H 5121453 (72582)		EA	1									96	24
X2F	2990-780-5252	LINK, UPPER: GOVERNOR CONTROL, R H 5121452 (72582)		EA	1									96	25

(1) SMR CODE	(2) FEDERAL STOCK NUMBER	(3) DESCRIPTION REF NUMBER & MFR CODE	USABLE ON CODE	(4) UNIT OF MEAS	(5) QTY INC IN UNIT	(6) 30-DAY DS MAINT ALLOWANCE (a) 1-20	(b) 21-50	(c) 51-100	(7) 30-DAY GS MAINT ALLOWANCE (a) 1-20	(b) 21-50	(c) 51-100	(8) 1-YR ALW PER 100 EQUIP CNTGY	(9) DEPOT MAINT ALW PER 100 EQUIP	(10) ILLUSTRATI (a) FIG. NO.
X2F	5305-269-3216	SCREW, CAP, HEXAGON HEAD: INJECTOR CLAMP, 3/8-16 X 2 IN. LG 180130 (72582)		EA	6									97
X2F	5310-276-3015	WASHER, CONVEX: INJECTOR CLAMP 5150250 (72582)		EA	6									97
X2F	2910-735-6187	CLAMP, FUEL INJECTOR 5121259 (72582)		EA	6									97
P F R	2910-966-9143	INJECTOR ASSEMBLY, FUEL 5228550 (72582)		EA	6	*	*	*	*	*	*	*	*	97
X1		CAP 5226413 (72582)		EA	12									97
X1		SPACER 5226186 (72582) (PART OF PARTS KIT, FSN 2910-588-0204)		EA	12									97
X1		SPRING 5226415 (72582)		EA	12									97
X1		ELEMENT 5228013 (72582) (PART OF PARTS KIT, FSN 2910-588-0204)		EA	12									97
X1		NUT 5228102 (72582)		EA	6									97
X1		PACKING 5226564 (72582) (PART OF PARTS KIT, FSN 2910-588-0204)		EA	6									97
X1		DEFLECTOR 5228109 (72582)		EA	6									97
X1		TIP 5228473 (72582) (PART OF PARTS KIT, FSN 2910-967-6026)		EA	6									97
X1		VALVE 5226411 (72582) PART OF PARTS KIT, FSN 2910-967-6026)		EA	6									97
X1		VALVE ASSEMBLY 5228316 (72582) (PART OF PARTS KIT, FSN 2910-967-6026)		EA	6									97
X1		SEAT 5228106 (72582)		EA	6									97
X1		VALVE 5228308 (72582)		EA	6									97
X1		VALVE KIT 5228313 (72582) (PART OF PARTS KIT, FSN 2910-967-6026)		EA	6									97
X1		SPRING 5227210 (72582)		EA	6									97
X1		STOP 5227318 (72582) (PART OF PARTS KIT, FSN 2910-967-6026)		EA	6									97
X1		CAGE 5228294 (72582) (PART OF PARTS KIT, FSN 2910-967-6026)		EA	6									97
P H	2910-014-8344	PIN, STOP: FUEL INJECTOR 5228608 (72582)		EA	6									97

(1) SMR CODE	(2) FEDERAL STOCK NUMBER	(3) DESCRIPTION REF NUMBER & MFR CODE	USABLE ON CODE	(4) UNIT OF MEAS	(5) QTY INC IN UNIT	(6) 30-DAY DS MAINT ALLOWANCE (a) 1-20	(b) 21-50	(c) 51-100	(7) 30-DAY GS MAINT ALLOWANCE (a) 1-20	(b) 21-50	(c) 51-100	(8) 1-YR ALW PER 100 EQUIP CNTGY	(9) DEPOT MAINT ALW PER 100 EQUIP	(10) ILLUSTRATION (a) FIG. NO.	(b) ITEM NO.
P H	2910-126-9713	GUIDE, FOLLOWER 5228104 (72582)		EA	6				*	*	*	*	*	97	21
P H	2910-792-9771	SPRING, HELICAL: COMPRESSION 5228739 (72582)		EA	6				*	*	*	*	*	97	22
P H	2910-354-1593	PLUNGER ASSEMBLY: FUEL INJECTOR 5228126 (72582)		EA	6				*	*	*	*	*	97	23
X1		PIN 226393 (72582)		EA	6									97	24
P H	5340-294-0600	SPACER, SLEEVE 5226567 (72582)		EA	6				*	*	*	*	*	97	25
P H	2910-272-6038	GEAR, SPUR 5226400 (72582)		EA	6				*	*	*	*	*	97	26
P H	2910-126-9712	RACK, INJECTOR 5226719 (72582)		EA	6				*	*	*	*	*	97	27
X1		BODY ASSEMBLY 5228509 (72582)		EA	6									97	28
X1		PIN 5226416 (72582)		EA	6									97	29
X1		TAG 5228559 (72582)		EA	6									97	30
P O	4730-187-4210	PLUG, PIPE: OIL DRAIN, 3/4 IN. NPT WWP471 (81348)		EA	1	*	*	*	*	*	*	*	*	98	1
P O	4730-249-3900	ELBOW, PIPE: OIL PAN DRAIN WWD521 (81348)		EA	1	*	*	*	*	*	*	*	*	98	2
P O	4730-196-1554	PIPE, STEEL: OIL PAN DRAIN, 3/4 IN. NPT, 6 IN. LG		FT	1	*	*	*	*	*	*	*	*	98	3
P O	4730-246-9218	ELBOW, PIPE: OIL PAN DRAIN, 3/4 IN. NPT WWP521TYPE1 (81348)		EA	1	*	*	*	*	*	*	*	*	98	4
P H	5306-021-2553	BOLT, ASSEMBLED WASHER: OIL PAN MTG, 5/16-18 X 1 3/8 IN. LG 9418923 (72582)		EA	22				*	*	*	*	*	98	5
P O	4730-289-5176	PLUG, PIPE: OIL PAN, 1/2 IN. NPT 103880 (72582)		EA	1	*	*	*	*	*	*	*	*	98	6
P O	4730-288-7829	PLUG, PIPE: OIL PAN, 3/4 IN. NPT 103869 (72582)		EA	2	*	*	*	*	*	*	*	*	98	7
X2H		PAN, OIL 5129677 (72582)		EA	1									98	8
P H	2815-682-7188	GASKET SET: OIL PAN 5196061 (72582)		EA	1			*	*	*	*	*	*	98	9
X1		GASKET 5121443 (72582) (PART OF PARTS KIT, FSN 2815-947-2951)		EA	2									98	
X1		GASKET 5126896 (72582) (PART OF PARTS KIT, FSN 2815-947-2951)		EA	2									98	
P H	5306-021-2516	BOLT, MACHINE: OIL PUMP STRAINER MTG, 5/16-18 X 5/8 IN. LG 9409010 (72582)		EA	2			*	*	*	*	*	*	99	1
P H	5310-209-2090	WASHER, FLAT: OIL PUMP STRAINER MTG, 5/16 IN. 103340 (72582)		EA	2			*	*	*	*	*	*	99	2

(1) SMR CODE	(2) FEDERAL STOCK NUMBER	(3) DESCRIPTION REF NUMBER & MFR CODE	USABLE ON CODE	(4) UNIT OF MEAS	(5) QTY INC IN UNIT	(6) 30-DAY DS MAINT ALLOWANCE (a) 1-20	(b) 21-50	(c) 51-100	(7) 30-DAY GS MAINT ALLOWANCE (a) 1-20	(b) 21-50	(c) 51-100	(8) 1-YR ALW PER 100 EQUIP CNTGY	(9) DEPOT MAINT ALW PER 100 EQUIP	(10) ILLUSTRATION (a) FIG. NO.	(b) ITEM NO.
P H	2940-745-7741	STRAINER ELEMENT: OIL PUMP INLET 5126143 (72582)		EA	1				*	*	*	*	*	99	3
P H	5305-269-3209	SCREW, CAP, HEXAGON HEAD: OIL PIPE SUPPORT MTG, 3/8-16 X 3/4 IN. LG 179837 (72582)		EA	2				*	*	*	*	*	99	4
P H	5310-261-7340	WASHER, LOCK: OIL PIPE SUPPORT MTG, 3/8 IN. 103321 (72582)		EA	2				*	*	*	*	*	99	5
P H	5310-080-6004	WASHER, FLAT: OIL PIPE SUPPORT MTG, 3/8 IN. 103341 (72582)		EA	2				*	*	*	*	*	99	6
P H		SCREW, CAP, HEXAGON HEAD: INLET TUBE MTG, 5/16-18 X 2 1/4 IN. LG 179827 (72582)		EA	2				*	*	*	*	*	99	7
P H	5310-407-9566	WASHER, LOCK: INLET TUBE MTG, 5/16 IN. MS35338-45 (96906)		EA	2				*	*	*	*	*	99	8
X1		GASKET 5126473 (72582) (PART OF PARTS KIT, FSN 2815-947-2951)		EA	1									99	9
P H	5305-269-3209	SCREW, CAP, HEXAGON HEAD: SUPPORT TO TUBE, 3/8-16 X 3/4 IN. LG 179837 (72582)		EA	2				*	*	*	*	*	99	10
P H	5310-261-7340	WASHER, LOCK: SUPPORT TO TUBE, 3/8 IN. 103321 (72582)		EA	2				*	*	*	*	*	99	11
P H	5310-080-6004	WASHER, FLAT: SUPPORT TO TUBE, 3/8 IN. 103341 (72582)		EA	2				*	*	*	*	*	99	12
X1		TUBE ASSEMBLY 5138244 (72582)		EA	1									99	13
P H	5310-013-7718	NUT, SELF-LOCKING HEXAGON: SUPPORT, 3/8-24 THD SIZE		EA	2				*	*	*	*	*	99	14
P H	5310-023-4457	WASHER, FLAT: SUPPORT, 25/64 IN. ID 5138619 (72582)		EA	8				*	*	*	*	*	99	15
P H	5305-206-6776	SCREW, CAP, HEXAGON HEAD: SUPPORT, 3/8-24 X 1 IN. LG 186627 (72582)		EA	2				*	*	*	*	*	99	16
X2H		SUPPORT, OIL PIPE 5138259 (72582)		EA	2									99	17
P O	2815-921-5387	CLAMP HOSE: COOLER OUTLET 5186841 (72582)		EA	2	*	*	*	*	*	*	*	*	100	1
P O	2930-363-7318	HOSE, WATER: OIL COOLER OUTLET ELBOW 5163824 (72582)		EA	1	*	*	*	*	*	*	*	*	100	2
P F	5306-226-4844	BOLT, MACHINE: OIL COOLER HOUSING MTG, 5/16-18 X 4 3/4 IN. LG MS90728-51 (96906)		EA	8	*	*	*	*	*	*	*	*	100	3
P F	5310-407-9566	WASHER, LOCK: OIL COOLER HOUSING MTG, 5/16 IN. MS35338-45 (96906)		EA	8	*	*	*	*	*	*	*	*	100	4
P O	4820-849-1220	PLUG, PIPE: OIL COOLER DRAIN, 1/4 IN. NPT 1036Y7 (72582)		EA	2	*	*	*	*	*	*	*	*	100	5

(1) SMR CODE	(2) FEDERAL STOCK NUMBER	(3) DESCRIPTION REF NUMBER & MFR CODE	USABLE ON CODE	(4) UNIT OF MEAS	(5) QTY INC IN UNIT	(6) 30-DAY DS MAINT ALLOWANCE (a) 1-20	(b) 21-50	(c) 51-100	(7) 30-DAY GS MAINT ALLOWANCE (a) 1-20	(b) 21-50	(c) 51-100	(8) 1-YR ALW PER 100 EQUIP CNTGY	(9) DEPOT MAINT ALW PER 100 EQUIP	(10) ILLUSTRATION (a) FIG. NO.	(b) ITEM NO.
P O	4730-187-4210	PLUG, PIPE: OIL COOLER HOUSING, 3/4 IN. NPT WWP471 (81348)		EA	1	*	*	*	*	*	*	*	*	100	6
X2F		HOUSING, OIL COOLER 5135518 (72582)		EA	1									100	7
P F	2520-733-0733	GASKET: OIL COOLER CORE, OUTER 5154215 (72582) (PART OF PARTS KIT, FSN 2815-947-2951)		EA	1	*	*	*	*	*	*	*	*	100	8
P F	2930-354-1601	CORE ASSEMBLY, OIL COOLER 8514600 (72582)		EA	1	*	*	*	*	*	*	*	*	100	9
P F	5330-624-6296	GASKET: OIL COOLER CORE, INNER 5150155 (72582) (PART OF PARTS KIT, FSN 2815-947-2951)		EA	1	*	*	*	*	*	*	*	*	100	10
P O	5306-225-8500	BOLT, MACHINE: OIL COOLER OUTLET ELBOW MTG, 5/16-18 X 1 1/8 IN. LG 179819 (72582)		EA	2	*	*	*	*	*	*	*	*	100	11
P O	5310-407-9566	WASHER, LOCK: OIL COOLER OUTLET ELBOW, 5/16 IN. MS35338-45 (96906)		EA	2	*	*	*	*	*	*	*	*	100	12
X20	2815-922-2025	ELBOW, OUTLET: OIL COOLER 5135565 (72582)		EA	1									100	13
P O	2930-613-9397	GASKET: OIL COOLER OUTLET ELBOW 5116357 (72582) (PART OF PARTS KIT, FSN 2815-947-2951)		EA	1	*	*	*	*	*	*	*	*	100	14
P F	5305-018-6283	SCREW, CAP, HEXAGON HEAD: AIR INLET HOUSING MTG, 3/8-16 X 3 1/2 IN. LG 186283 (72582)		EA	2	*	*	*	*	*	*	*	*	101	1
P F	5305-688-2111	SCREW, CAP, HEXAGON HEAD: AIR INLET HOUSING MTG, 3/8-16 X 1 3/8 IN. LG 186612 (72582)		EA	1	*	*	*	*	*	*	*	*	101	2
P F	5305-018-0129	SCREW, CAP, HEXAGON HEAD: AIR INLET HOUSING MTG, 3/8-16 X 1 7/8 IN. LG 179846 (72582)		EA	3	*	*	*	*	*	*	*	*	101	3
P F	5310-261-7340	WASHER, LOCK: AIR INLET HOUSING MTG, 3/8 IN. 103321 (72582)		EA	6	*	*	*	*	*	*	*	*	101	4
P F	5310-080-6004	WASHER, FLAT: AIR INLET HOUSING MTG, 3/8 IN. 103341 (72582)		EA	6	*	*	*	*	*	*	*	*	101	5
P F	2990-682-7197	GASKET: AIR INLET HOUSING 5127247 (72582) (PART OF PARTS KIT, FSN 2815-947-2951)		EA	1	*	*	*	*	*	*	*	*	101	6
X1		SCREEN 5122610 (72582) (PART OF BLOWER KIT, P/N 5197730 (72582) AND FSN 2815-947-2951)		EA	1									101	7
P O	5315-839-2325	PIN, COTTER: SOLENOID LINK PIN, 1/16 IN. DIA, 1/2 IN. LG MS24665-132 (96906)		EA	1	*	*	*	*	*	*	*	*	101	8
P O		PIN, CLEVIS: SOLENOID LINK 5176810 (72582)		EA	1	*	*	*	*	*	*	*	*	101	9

(1) SMR CODE	(2) FEDERAL STOCK NUMBER	(3) DESCRIPTION REF NUMBER & MFR CODE	USABLE ON CODE	(4) UNIT OF MEAS	(5) QTY INC IN UNIT	(6) 30-DAY DS MAINT ALLOWANCE (a) 1-20	(b) 21-50	(c) 51-100	(7) 30-DAY GS MAINT ALLOWANCE (a) 1-20	(b) 21-50	(c) 51-100	(8) 1-YR ALW PER 100 EQUIP CNTGY	(9) DEPOT MAINT ALW PER 100 EQUIP	(10) ILLUSTRATION (a) FIG. NO.	(b) ITEM NO.
P O	5310-012-3179	NUT, PLAIN, HEXAGON: SOLENOID MTG, 1/4-20 THD SIZE 123179 (72582)		EA	4	*	*	*	*	*	*	*	*	101	10
P O	5310-582-5965	WASHER, LOCK: SOLENOID MTG, 1/4 IN. MS35338-44 (96906)		EA	4	*	*	*	*	*	*	*	*	101	11
P O	5305-068-0508	SCREW, CAP, HEXAGON HEAD: SOLENOID MTG, 1/4-20 X 3/4 IN. LG MS90728-6 (96906)		EA	4	*	*	*	*	*	*	*	*	101	12
P O	5310-297-8836	NUT, PLAIN, HEXAGON: SOLENOID SHAFT, 1/4-28 THD SIZE 12613 (24617)		EA	2	*	*	*	*	*	*	*	*	101	13
X20		LINK, SOLENOID 5178860 (72582)		EA	1									101	14
P O		SOLENOID, AIR SHUT-OFF 1118091 (72582)		EA	1	*	*	*	*	*	*	*	*	101	15
P O	5306-550-1201	BOLT, MACHINE: SOLENOID BRACKET MTG, 5/16-18 X 3/4 IN. LG 186648 (72582)		EA	3	*	*	*	*	*	*	*	*	101	16
P O	5310-407-9566	WASHER, LOCK: SOLENOID BRACKET MTG, 5/16 IN. MS35338-45 (96906)		EA	3	*	*	*	*	*	*	*	*	101	17
X2Q		BRACKET: AIR SHUT-OFF SOLENOID 5130142 (72582)		EA	1									101	18
X2F		HOUSING ASSEMBLY: AIR INLET 5143439 (72582)		EA	1									101	19
P F	5305-071-2239	SCREW, CAP, HEXAGON HEAD: LATCH, 1/4-20 X 1 1/2 IN. LG 121926 (72582)		EA	1	*	*	*	*	*	*	*	*	101	20
P F	5310-637-9541	WASHER, LOCK: LATCH, 1/4 IN. 120380 (72582)		EA	1	*	*	*	*	*	*	*	*	101	21
P F	5310-809-4058	WASHER, FLAT: LATCH, 1/4 IN. 120392 (72582)		EA	1	*	*	*	*	*	*	*	*	101	22
X1		SPACER, SLEEVE: LATCH 5113633 (72582)		EA	1									101	23
X1		LATCH, VALVE 5114727 (72582)		EA	1									101	24
X1		HANDLE ASSEMBLY: AIR CONTROL 5114974 (72582)		EA	1									101	25
P F	5310-080-6004	WASHER, FLAT: SHAFT, 3/8 IN. 103341 (72582)		EA	1	*	*	*	*	*	*	*	*	101	26
X1		PIN 273436 (72582)		EA	1									101	27
X1		CAM 5122623 (72582)		EA	1									101	28
P F	5330-580-1726	PACKING, PREFORMED: SHAFT 5182977 (72582)		EA	2	*	*	*	*	*	*	*	*	101	29
X1		PIN 273436 (72582)		EA	4									101	30
X1		SPRING 5111904 (72582)		EA	1									101	31
X1		VALVE 5121353 (72582)		EA	2									101	32
X1		SHAFT 5112971 (72582)		EA	1									101	33

(1) SMR CODE	(2) FEDERAL STOCK NUMBER	(3) DESCRIPTION REF NUMBER & MFR CODE	USABLE ON CODE	(4) UNIT OF MEAS	(5) QTY INC IN UNIT	(6) 30-DAY OS MAINT ALLOWANCE (a) 1-20	(b) 21-50	(c) 51-100	(7) 30-DAY GS MAINT ALLOWANCE (a) 1-20	(b) 21-50	(c) 51-100	(8) 1-YR ALW PER 100 EQUIP CNTGY	(9) DEPOT MAINT ALW PER 100 EQUIP	(10) ILLUSTRATION (a) FIG. NO.	(b) ITEM NO.
P O		PLUG, PIPE: HOUSING, 3/4 IN. NPT 444636 (72582)		EA	1	*	*	*	*	*	*	*	*	101	34
X1		HOUSING, OFFSET 5127214 (72582)		EA	1									101	35
P F	5306-947-7990	BOLT, MACHINE, HEXAGON HEAD: BLOWER MTG 5132923 (72582)		EA	4	*	*	*	*	*	*	*	*	102	1
P F	5310-780-8116	WASHER, FLAT: BLOWER MTG, 7/16 IN. 5131913 (72582)		EA	4	*	*	*	*	*	*	*	*	102	2
P F	2990-780-5231	GASKET: GOVERNOR HOUSING TO BLOWER 5119438 (72582) (ALSO PART OF REPAIR KIT, P/N 5197730 (72582), AND FSN 2815-947-2951)		EA	1	*	*	*	*	*	*	*	*	102	3
P F	2990-780-5231	GASKET, MOUNTING 5121329 (72582) (ALSO PART OF REPAIR KIT, P/N 5197730 (72582), AND FSN 2815-947-2951)		EA	2	*	*	*	*	*	*	*	*	102	4
P F	2990-780-5236	SEAL, BLOWER 5127963 (72582) (ALSO PART OF REPAIR KIT, P/N 7197730 (72582), AND FSN 2815-947-2951)		EA	1	*	*	*	*	*	*	*	*	102	5
P F R	2815-922-8351	BLOWER ASSEMBLY 5134916 (72582)		EA	1	*	*	*	*	*	*	*	*	102	6
P H	5305-269-3218	SCREW, CAP, HEXAGON HEAD: COVER MTG FRONT, 3/8-16 X 2 1/2 IN. LG 179849 (72582)		EA	6				*	*	*	*	*	102	7
X1		PLATE 5119395 (72582)		EA	2									102	8
X1		PLATE 5119394 (72582)		EA	1									102	9
X1		COVER 5119429 (72582)		EA	1									102	10
X1		GASKET 5119433 (72582) (PART OF REPAIR KIT, P/N 5197730 (72582), AND FSN 2815-947-2951)		EA	1									102	11
P H	5306-940-9062	BOLT, MACHINE, HEXAGON HEAD: THRUST PLATE MTG, 1/4-20 X 1 IN. LG 940962 (72582)		EA	3				*	*	*	*	*	102	12
X1		PLATE 5134179 (72582)		EA	1									102	13
P H	5306-022-1950	BOLT, MACHINE, SELF-LOCKING: SHAFT THRUST WASHER, 3/8-24 X 7/8 IN. LG		EA	2				*	*	*	*	*	102	14
P H	2990-966-9141	WASHER, THRUST: ROTOR SHAFT 5127077 (72582)		EA	2				*	*	*	*	*	102	15
X1		SPACER 5116170 (72582)		EA	3									102	16
2H	2990-079-8611	PLATE ASSEMBLY, FRONT 5139114 (72582)		EA	1									102	17
H	2815-079-8421	SEAL, PLAIN, ENCASED: PLATE 5134924 (72582)		EA	2				*	*	*	*	*	102	18
H	4730-044-4687	PLUG, PIPE: PLATE, 1/8 IN NPT 444687 (72582)		EA	1				*	*	*	*	*	102	19

(1) SMR CODE	(2) FEDERAL STOCK NUMBER	(3) DESCRIPTION REF NUMBER & MFR CODE	USABLE ON CODE	(4) UNIT OF MEAS	(5) QTY INC IN UNIT	(6) 30-DAY DS MAINT ALLOWANCE (a) 1-20	(b) 21-50	(c) 51-100	(7) 30-DAY GS MAINT ALLOWANCE (a) 1-20	(b) 21-50	(c) 51-100	(8) 1-YR ALW PER 100 EQUIP CNTGY	(9) DEPOT MAINT ALW PER 100 EQUIP	(10) ILLUSTRATION (a) FIG. NO.	(b) ITEM NO.
X2H	2815-089-6439	HOUSING ASSEMBLY, ROTOR 5119393 (72582)		EA	1									102	20
X1		PIN 141242 (72582)		EA	4									102	21
P H	5306-780-8109	BOLT, MACHINE, HEXAGON HEAD: COUPLING, 1/4-28 X 1 5/8 IN. LG 9409221 (72582)		EA	4				*	*	*	*	*	102	22
X2H	2990-918-4206	RETAINER, BLOWER DRIVE 5119466 (72582)		EA	1									102	23
P H	6115-055-0830	COUPLING ASSEMBLY: BLOWER DRIVE 5119411 (72582)		EA	1				*	*	*	*	*	102	24
X1		SUPPORT 5119412 (72582)		EA	1									102	25
X1		SPRING SET 5196614 (72582)		EA	1									102	26
X1		CAM 5180323 (72582)		EA	1									102	27
X1		SPACER 5126237 (72582)		EA	1									102	28
P H	5306-781-7777	BOLT, MACHINE, HEXAGON HEAD: GOVERNOR DRIVE PLATE, 1/4-28 X 3/4 IN. LG 9409219 (72582)		EA	4				*	*	*	*	*	102	29
X2H	2815-921-5352	PLATE, BLOWER: GOVERNOR DRIVE 5121336 (72582)		EA	1									102	30
P H	5306-059-3529	BOLT, MACHINE, HEXAGON HEAD: RIGHT GEAR PILOT, 5/16-24 X 1 3/4 IN. LG 9420604 (72582)		EA	1				*	*	*	*	*	102	31
P H	5306-781-7776	BOLT, MACHINE, HEXAGON HEAD: LEFT GEAR PILOT, 5/16-24 X 1 3/4 IN. LG 9409023 (72582)		EA	1				*	*	*	*	*	102	32
X1		BUSHING 5126236 (72582) (PART OF BLOWER KIT, P/N 5197730 (72582)		EA	2									102	33
P H	2990-966-9142	GEAR, ROTOR: RH 5128599 (72582)		EA	1				*	*	*	*	*	102	34
P H	2990-967-3307	GEAR, ROTOR: LH 5128600 (72582)		EA	1				*	*	*	*	*	102	35
X1		SHIM, .002 IN. 5116164 (72582) (PART OF BLOWER KIT, P/N 5197730 (72582))		EA	V									102	36
X1		SHIM, .003 IN. 5116165 (72582) (PART OF BLOWER KIT, P/N 5197730 (72582))		EA	V									102	36
X1		SHIM, .004 IN. 5116166 (72582) (PART OF BLOWER KIT, P/N 5197730 (72582))		EA	V									102	36
X1		SHIM, .005 IN. 5116167 (72582) (PART OF BLOWER KIT, P/N 5197730 (72582))		EA	V									102	36

(1) SMR CODE	(2) FEDERAL STOCK NUMBER	(3) DESCRIPTION REF NUMBER & MFR CODE	USABLE ON CODE	(4) UNIT OF MEAS	(5) QTY INC IN UNIT	(6) 30-DAY OS MAINT ALLOWANCE (a) 1-20	(b) 21-50	(c) 51-100	(7) 30-DAY GS MAINT ALLOWANCE (a) 1-20	(b) 21-50	(c) 51-100	(8) 1-YR ALW PER 100 EQUIP CNTGY	(9) DEPOT MAINT ALW PER 100 EQUIP	(10) ILLUSTRATION (a) FIG. NO.	(b) ITEM NO.
X1		SPACER 5116168 (72582) (PART OF BLOWER KIT, P/N 5197730 (72582))		EA	2									102	37
X2H	2815-081-9329	PLATE ASSEMBLY, REAR 5134915 (72582)		EA	1									102	38
P H	2815-079-8421	SEAL, PLAIN, ENCASED: PLATE 5134924 (72582)		EA	2									102	39
P H	4730-044-4687	PLUG, PIPE: 1/8 IN. NPT 444687 (72582)		EA	1				*	*	*	*	*	102	40
X2H	2815-081-9329	ROTOR ASSEMBLY, BLOWER 5134913 (72582)		EA	2									102	41
P F	2815-780-5241	BOLT, ROCKER SHAFT 5119198 (72582)		EA	12	*	*	*	*	*	*	*	*	103	1
X2F	2815-921-5339	BRACKET, ROCKER SHAFT 5116128 (72582)		EA	12									103	2
P F	2815-055-1583	SHAFT ASSEMBLY 5116072 (72582)		EA	6	*	*	*	*	*	*	*	*	103	3
X1		PIN 5151272 (72582)		EA	6									103	4
P H	5340-282-5031	RING, RETAINING 5150303 (72582)		EA	18				*	*	*	*	*	103	5
P H	5310-270-7111	NUT, PLAIN, HEXAGON: PUSH ROD LOCK 5151601 (72582)		EA	18				*	*	*	*	*	103	6
P H	2815-053-8992	RETAINER, SPRING: UPPER 5108919 (72582)		EA	18				*	*	*	*	*	103	7
P H	2815-689-8264	SPRING, HELICAL, COMPRESSION: PUSH ROD 5108918 (72582)		EA	18				*	*	*	*	*	103	8
P H	2815-885-5731	SEAT, HELICAL: SPRING, LOWER 5123250 (72582)		EA	18				*	*	*	*	*	103	9
P H	2815-345-6073	ROD, PUSH 5128640 (72582)		EA	18				*	*	*	*	*	103	10
P F	2815-966-9104	ARM ASSEMBLY, ROCKER: LH 5135267 (72582)		EA	6	*	*	*	*	*	*	*	*	103	11
P F	2815-849-2601	ARM ASSEMBLY, ROCKER: RH 5135268 (72582)		EA	6	*	*	*	*	*	*	*	*	103	12
P F	2815-600-5567	ARM ASSEMBLY: INJECTOR 5179954 (72582)		EA	6	*	*	*	*	*	*	*	*	103	13
P H	5305-068-0508	SCREW, CAP, HEXAGON HEAD: CAM FOLLOWER GUIDE, 1/4-20 X 3/4 IN. LG MS90728-6 (96906)		EA	12				*	*	*	*	*	103	14
P H	5310-582-5965	WASHER, LOCK: CAM FOLLOWER GUIDE, 1/4 IN. MS35338-44 (96906)		EA	12				*	*	*	*	*	103	15
P H	6115-055-1564	GUIDE, CAM FOLLOWER 5116125 (72582)		EA	6				*	*	*	*	*	103	16
P H	2815-567-4398	FOLLOWER ASSEMBLY, CAM 5115087 (72582)		EA	18				*	*	*	*	*	103	17
P H	2815-886-8207	VALVE, POPPET, ENGINE: EXHAUST 5199323 (72582)		EA	24				*	*	*	*	*	103	18
X1		LOCK, VALVE SPRING 5116341 (72582)		EA	48									103	19
P H	6115-055-0831	CAP, VALVE SPRING 5123330 (72582)		EA	24				*	*	*	*	*	103	20

(1) SMR CODE	(2) FEDERAL STOCK NUMBER	(3) DESCRIPTION REF NUMBER & MFR CODE	USABLE ON CODE	(4) UNIT OF MEAS	(5) QTY INC IN UNIT	(6) 30-DAY DS MAINT ALLOWANCE (a) 1-20	(b) 21-50	(c) 51-100	(7) 30-DAY GS MAINT ALLOWANCE (a) 1-20	(b) 21-50	(c) 51-100	(8) 1-YR ALW PER 100 EQUIP CNTGY	(9) DEPOT MAINT ALW PER 100 EQUIP	(10) ILLUSTRATION (a) FIG. NO.	(b) ITEM NO.
P H	2815-087-1814	SPRING, HELICAL, COMPRESSION 5123329 (72582)		EA	24				*	*	*	*	*	103	21
P H	5310-053-8377	WASHER, FLAT 5111467 (72582)		EA	24				*	*	*	*	*	103	22
P H	5305-725-2317	SCREW, CAP, HEXAGON HEAD: FRONT COVER MTG, 3/8-16 X 1 1/2 IN. LG 186628 (72582)		EA	5				*	*	*	*	*	104	1
P H	5305-688-2111	SCREW, CAP, HEXAGON HEAD: FRONT COVER MTG, 3/8-16 X 1 3/8 IN. LG 186612 (72582)		EA	6				*	*	*	*	*	104	2
P H	5305-017-9848	SCREW, CAP, HEXAGON HEAD: FRONT COVER MTG, 3/8-16 X 2 1/4 IN. LG 179848 (72582)		EA	10				*	*	*	*	*	104	3
P H	5310-261-7340	WASHER, LOCK: FRONT COVER MTG, 3/8 IN. 103321 (72582)		EA	21				*	*	*	*	*	104	4
P H	2815-792-9849	SEAL, PLAIN, ENCASED: CAM AND BALANCER, OIL 5116476 (72582) (ALSO PART OF PARTS KIT, FSN 2815-947-2951)		EA	2				*	*	*	*	*	104	5
P2H		COVER ASSEMBLY, UPPER 5128026 (72582)		EA	1				*	*	*	*	*	104	6
P H	2815-921-5379	PLUG, CUP, 7/8 IN. 5150829 (72582)		EA	2				*	*	*	*	*	104	7
P H	5315-238-0838	PIN, STRAIGHT, HEADLESS: COVER DOWEL, 5/16 IN. DIA, 7/8 IN. LG 5157933 (72582)		EA	2				*	*	*	*	*	104	8
P H	2815-074-1931	GASKET: ENGINE FRONT COVER, UPPER 5124055 (72582) (ALSO PART OF PARTS KIT, FSN 2815-947-2951)		EA	1				*	*	*	*	*	104	9
P H	5305-269-3218	SCREW, CAP, HEXAGON HEAD: FRONT LOWER COVER MTG, 3/8-16 X 2 1/2 IN. LG 179849 (72582)		EA	4				*	*	*	*	*	105	1
P H	5305-018-6283	SCREW, CAP, HEXAGON HEAD: FRONT LOWER COVER MTG, 3/8-16 X 3 1/2 IN. LG 186283 (72582)		EA	4				*	*	*	*	*	105	2
P H	5306-637-9623	BOLT, MACHINE: FRONT COVER MTG, 3/8-16 X 4 IN. LG 186285 (72582)		EA	4				*	*	*	*	*	105	3
P H	5310-261-7340	WASHER, LOCK: LOWER FRONT COVER MTG, 3/8 IN. 103321 (72582)		EA	12				*	*	*	*	*	105	4
X1		GASKET 5119368 (72582) (PART OF PARTS KIT, FSN 2815-947-2951)		EA	1									105	5
P H	4730-044-4867	PLUG, PIPE: FRONT LOWER COVER, 3/8 IN. NPT 444867 (72582)		EA	3				*	*	*	*	*	105	6
P H	2815-792-9841	SEAL, PLAIN, ENCASED 5116224 (72582) (PART OF PARTS KIT, FSN 2815-947-2951)		EA	1				*	*	*	*	*	105	7

(1) SMR CODE	(2) FEDERAL STOCK NUMBER	(3) DESCRIPTION REF NUMBER & MFR CODE	USABLE ON CODE	(4) UNIT OF MEAS	(5) QTY INC IN UNIT	(6) 30-DAY OS MAINT ALLOWANCE (a) 1-20	(b) 21-50	(c) 51-100	(7) 30-DAY GS MAINT ALLOWANCE (a) 1-20	(b) 21-50	(c) 51-100	(8) 1-YR ALW PER 100 EQUIP CNTGY	(9) DEPOT MAINT ALW PER 100 EQUIP	(10) ILLUSTRATION (a) FIG. NO.	(b) ITEM NO.
P H	5306-021-2517	BOLT, MACHINE: OIL PUMP MTG, 5/16-18 THD SIZE, 2 IN. LG 179826 (72582)		EA	6			*	*	*	*	*	*	105	8
P H	5310-407-9566	WASHER, LOCK: OIL PUMP MTG, 5/16 IN. MS35338-45 (96906)		EA	6			*	*	*	*	*	*	105	9
P H	2815-780-5218	PUMP ASSEMBLY, ENGINE OIL 5116070 (72582)		EA	1				*	*	*	*	*	105	10
P H	5305-253-5620	SCREW, DRIVE: COVER, NO. 6 X 3/8 IN. LG 145067 (72582)		EA	2				*	*	*	*	*	105	11
X1		COVER ASSEMBLY 5195685 (72582)		EA	1									105	12
P H	2815-789-4848	ROTOR, ENGINE OIL PUMP 5195687 (72582)		EA	1				*	*	*	*	*	105	13
X2H	2815-922-2006	COVER ASSEMBLY, LOWER 5136274 (72582)		EA	1									105	14
P H	2815-903-0909	PLUG, MACHINE THREAD: OIL PRESSURE REGULATOR 5136227 (72582)		EA	2				*	*	*	*	*	105	15
X1		WASHER 5177773 (72582) (PART OF PARTS KIT, FSN 2815-947-2951)		EA	2									105	16
P H	2815-682-7190	SPRING, HELICAL, COMPRESSION 5126436 (72582)		EA	2				*	*	*	*	*	105	17
P H	2815-903-0907	VALVE, OIL PRESSURE 5143021 (72582)		EA	2				*	*	*	*	*	105	18
P H	5305-354-1227	SCREW, CAP, HEXAGON HEAD: IDLER GEAR, 3/8-16 X 1 3/4 IN. LG 5157244 (72582)		EA	1				*	*	*	*	*	106	1
P H	2815-074-1911	WASHER, THRUST, IDLER 5132504 (72582)		EA	2				*	*	*	*	*	106	2
X2H	2815-921-5357	HUB, IDLER GEAR 5124458 (72582)		EA	1									106	3
X2H	2815-891-7699	GEAR ASSEMBLY: IDLER 5135227 (72582)		EA	1									106	4
P H	2815-830-0246	BEARING, SLEEVE: GEAR 5196793 (72582)		EA	1				*	*	*	*	*	106	5
P H	2815-792-8248	BOLT, SPECIAL: HEAD MTG, 5/8-11 X 6 1/4 IN. LG 5121263 (72582)		EA	16				*	*	*	*	*	107	1
P O	5306-940-9079	BOLT, SELF-LOCKING: COVER MTG 9409079 (72582)		EA	4	*	*	*	*	*	*	*	*	107	2
P O		PLUG, PIPE: WATER HOLE COVER, 1/4 IN. NPT 444692 (72582)		EA	1	*	*	*	*	*	*	*	*	107	3
X20	2815-921-5378	COVER: WATER HOLE, LH 5136610 (72582)		EA	1									107	4
X20		COVER: WATER HOLE, RH 5129019 (72582)		EA	1									107	5
P O	6115-055-1584	GASKET: COVER 5116242 (72582) (ALSO COMPONENT OF PARTS KIT, FSN 2815-947-2951 AND FSN 2815-792-9839)		EA	2	*	*	*	*	*	*	*	*	107	6

(1) SMR CODE	(2) FEDERAL STOCK NUMBER	(3) DESCRIPTION REF NUMBER & MFR CODE	USABLE ON CODE	(4) UNIT OF MEAS	(5) QTY INC IN UNIT	(6) 30-DAY DS MAINT ALLOWANCE (a) 1-20	(b) 21-50	(c) 51-100	(7) 30-DAY GS MAINT ALLOWANCE (a) 1-20	(b) 21-50	(c) 51-100	(8) 1-YR ALW PER 100 EQUIP CNTGY	(9) DEPOT MAINT ALW PER 100 EQUIP	(10) ILLUSTRATION (a) FIG. NO.	(b) ITEM NO.
P O	5307-550-1879	STUD, PLAIN: MANIFOLD MTG 5112899 (72582)		EA	8	*	*	*	*	*	*	*	*	107	7
P2H	2815-789-1006	CYLINDER HEAD ASSEMBLY: DIESEL ENGINE 5198203 (72582)		EA	2				*	*	*	*	*	107	8
P H	4730-142-1775	PLUG, MACHINE THREAD: CYLINDER HEAD, 3/8-16 THD SIZE 5154453 (72582)		EA	8				*	*	*	*	*	107	9
P H	4730-044-4687	PLUG, PIPE: CYLINDER HEAD 1/8 IN. NPT 444687 (72582)		EA	8				*	*	*	*	*	107	10
P H	4730-886-5975	PLUG, PIPE: CYLINDER HEAD, 1/4 IN. NPT 5125237 (72582)		EA	6				*	*	*	*	*	107	11
P H	4730-965-1257	PLUG, PIPE: CYLINDER HEAD 5121182 (72582)		EA	4				*	*	*	*	*	107	12
P H	2815-921-5380	PLUG, CUP: CYLINDER HEAD, 13/16 IN. DIA 5151449 (72582)		EA	12				*	*	*	*	*	107	13
X1		ADAPTER 5116262 (72588)		EA	2									107	14
P H	2930-074-1922	NOZZLE, WATER: CYLINDER HEAD 5119293 (72582)		EA	8				*	*	*	*	*	107	15
X1		TUBE 5150041 (72582)		EA	6									107	16
P H	5330-599-0505	PACKING, PREFORMED: INJECTOR TUBE 5160037 (72582)		EA	6				*	*	*	*	*	107	17
P H	2815-970-3665	GUIDE, ENGINE POPPET 5116120 (72582)		EA	24				*	*	*	*	*	107	18
X1		SEAL ASSEMBLY 5131973 (72582) (COMPONENT OF GUIDE KIT, P/N 5198529 (72582))		EA	24									107	19
X1		GUIDE 5131961 (72582) (COMPONENT OF GUIDE KIT, P/N 5198529 (72582))		EA	24									107	20
P H	2815-966-9106	SEAT, VALVE 5116361 (72582)		EA	24				*	*	*	*	*	107	21
P H	2815-792-9021	RING SET, PISTON 5198822 (72582) (ALSO PART OF CYLINDER KIT, FSN 2815-792-8249)		EA	6				*	*	*	*	*	108	1
P H	2815-820-7455	PIN, PISTON 5116189 (72582) (ALSO PART OF CYLINDER KIT, FSN 2815-792-8249)		EA	6				*	*	*	*	*	108	2
X1		PISTON 5195931 (72582) (PART OF CYLINDER KIT, FSN 2815-792-8249)		EA	6									108	3
X1		PISTON AND BUSHING 5116201 (72582) (PART OF CYLINDER KIT, FSN 2815-792-889)		EA	6									108	4
P H	2815-792-8253	BEARING, SLEEVE 5116181 (72582) (ALSO PART OF CYLINDER KIT, FSN 2815-792-8249)		EA	12				*	*	*	*	*	108	5

(1) MR DE	(2) FEDERAL STOCK NUMBER	(3) DESCRIPTION REF NUMBER & MFR CODE	USABLE ON CODE	(4) UNIT OF MEAS	(5) QTY INC IN UNIT	(6) 30-DAY DS MAINT ALLOWANCE (a) 1-20	(b) 21-50	(c) 51-100	(7) 30-DAY GS MAINT ALLOWANCE (a) 1-20	(b) 21-50	(c) 51-100	(8) 1-YR ALW PER 100 EQUIP CNTGY	(9) DEPOT MAINT ALW PER 100 EQUIP	(10) ILLUSTRATION (a) FIG. NO.	(b) ITEM NO.
H	2815-792-9020	RETAINER, PISTON PIN 5180250 (72582) (ALSO PART OF CYLINDER KIT, FSN 2815-792-8249)		EA	12				*	*	*	*	*	108	6
H	2815-074-1937	CONNECTING ROD, PISTON 5133109 (72582)		EA	6				*	*	*	*	*	108	7
H	5310-087-3130	NUT, PLAIN, HEXAGON: ROD BOLT 839103 (72582)		EA	12									108	8
H	2815-789-4849	BOLT, CONNECTING ROD 5197852 (72582)		EA	12									108	9
H	2815-792-8253	BEARING, SLEEVE 5116181 (72582)		EA	12				*	*	*	*	*	108	10
D	2815-363-7300	NOZZLE, OIL CONNECTION 5150140 (72582)		EA	6				*	*	*	*	*	108	11
H	2815-789-4851	BEARING, SLEEVE SET 5197975 (72582)		EA	6				*	*	*	*	*	108	12
		LOWER BEARING 51330988 (72582)		EA	6									108	13
		UPPER BEARING 5133101 (72582)		EA	6									108	14
H	2815-866-9402	CYLINDER SLEEVE 5132803 (72582) (ALSO PART OF CYLINDER KIT, FSN 2815-792-8249)		EA	6				*	*	*	*	*	108	15
H	5330-179-6227	PACKING, PREFORMED: SLEEVE 5121256 (72582) (ALSO PART OF CYLINDER KIT, FSN 2815-792-8249, AND PARTS KIT, FSN 2815-947-2951)		EA	6				*	*	*	*	*	108	16
H	2815-922-6487	BEARING SHELL SET 5198410 (72582)		EA	4				*	*	*	*	*	109	1
		SHELL, LOWER 5116401 (72582)		EA	4									109	2
		SHELL, UPPER 5137595 (72582)		EA	4									109	3
H	2815-511-2336	WASHER HALF, THRUST 5159353 (72582)		EA	4				*	*	*	*	*	109	4
H	2815-820-7843	GEAR, HELICAL: CRANKSHAFT, TIMING 5116195 (72582)		EA	1									109	5
H	5315-082-3969	KEY, WOODRUFF: CRANKSHAFT TIMING GEAR, 1/4 X 3/4 IN. 127559 (72582)		EA	1				*	*	*	*	*	109	6
H	2815-903-0903	GEAR, OIL PUMP DRIVE 5135079 (72582)		EA	1				*	*	*	*	*	109	7
H R	2815-944-7064	CRANKSHAFT ASSEMBLY 5198562 (72582)		EA	1				*	*	*	*	*	109	8
F	5310-274-4658	NUT, PLAIN, HEXAGON: CAMSHAFT PULLEY MTG 5150087 (72582)		EA	2	*	*	*	*	*	*	*	*	110	1
F	2815-921-6994	PULLEY, GROOVE: CAMSHAFT 5121109 (72582)		EA	2									110	2
F	5315-043-1787	KEY, WOODRUFF: CAMSHAFT PULLEY 218217 (72582)		EA	2	*	*	*	*	*	*	*	*	110	3
	2815-088-9876	SPACER, SLEEVE: CAMSHAFT PULLEY 5121071 (72582)		EA	2				*	*	*	*	*	110	4

(1) SMR CODE	(2) FEDERAL STOCK NUMBER	(3) DESCRIPTION REF NUMBER & MFR CODE	USABLE ON CODE	(4) UNIT OF MEAS	(5) DTY INC IN UNIT	(6) 30-DAY DS MAINT ALLOWANCE (a) 1-20	(b) 21-50	(c) 51-100	(7) 30-DAY GS MAINT ALLOWANCE (a) 1-20	(b) 21-50	(c) 51-100	(8) 1-YR ALW PER 100 EQUIP CNTGY	(9) DEPOT MAINT ALW PER 100 EQUIP	(10) ILLUSTRATION (a) FIG. NO.	(b) ITEM NO.
P H	5305-269-2801	SCREW, CAP, HEXAGON HEAD: LH GEAR NUT RETAINER MTG, 3/8-24 X 7/16 IN. LG 181360 (72582)		EA	2				*	*	*	*	*	110	5
X2H	2815-692-4152	PLATE: SHAFT GEAR NUT RETAINER 5172734 (72582)		EA	2									110	6
P H	5310-274-4658	NUT, PLAIN, HEXAGON: CAMSHAFT GEAR MTG 5150087 (72582)		EA	2				*	*	*	*	*	110	7
X2H	2815-933-5249	GEAR, CAMSHAFT: LEFT BANK 5133388 (72582)		EA	1									110	8
X2H	2815-903-0905	GEAR, CAMSHAFT: RIGHT BANK 5133387 (72582)		EA	1									110	8
P H	5315-043-1787	KEY, WOODRUFF: CAMSHAFT TIMING GEAR 218217 (72582)		EA	2				*	*	*	*	*	110	9
P H	3930-057-8492	SCREW, CAP, HEXAGON HEAD: BEARING UNIT MTG, 3/8-16 X 1 IN. LG 9409028 (72582)		EA	4				*	*	*	*	*	110	10
P H	2815-792-9028	BEARING UNIT: CAMSHAFT 5116198 (72582)		EA	2				*	*	*	*	*	110	11
P H	5310-761-1985	WASHER, FLAT: GEAR SPACER 5121077 (72582)		EA	2				*	*	*	*	*	110	12
P H	2815-051-4514	SLINGER, OIL 5134388 (72582)		EA	2				*	*	*	*	*	110	13
P2H	2815-074-1933	CAMSHAFT, ENGINE: LEFT BANK 5126933 (72582)		EA	1				*	*	*	*	*	110	14
P2H	2815-074-1934	CAMSHAFT, ENGINE: RIGHT BANK 5126934 (72582)		EA	1				*	*	*	*	*	110	14
X1		RING 5116292 (72582) (PART OF PARTS KIT, FSN 2815-947-2951 AND 2815-792-9839)		EA	2									111	1
X1		GASKET 5121254 (72582) (PART OF PARTS KIT, FSN 2815-947-2951 AND 2815-792-9839)		EA	6									111	2
X1		WASHER 5116290 (72582) (PART OF PARTS KIT, FSN 2815-947-2951 AND 2815-792-9839)		EA	8									111	3
X1		WASHER 5121207 (72582) (PART OF PARTS KIT, FSN 2815-947-2951 AND 2815-792-9839)		EA	8									111	4
X1		WASHER 5116122 (72582) (PART OF PARTS KIT, FSN 2815-947-2951 AND 2815-792-9839)		EA	4									111	5
P F	2815-901-1032	SHIM: BACKING PLATE 5123802 (72582)		EA	1	*	*	*	*	*	*	*	*	111	6
P H	5305-577-5462	SCREW, CAP, HEXAGON HEAD: BLOCK PLATE MTG, 3/8-16 X 1 IN. LG 179839 (72582)		EA	12				*	*	*	*	*	111	7
P H	5310-261-7340	WASHER, LOCK: BLOCK PLATE MTG, 3/8 IN. 103321 (72582)		EA	12				*	*	*	*	*	111	8
P H	5305-071-2069	SCREW, CAP, HEXAGON HEAD: BLOCK PLATE MTG, 1/2-13 X 1 1/2 IN. LG 186725 (72582)		EA	2				*	*	*	*	*	111	

(1) SMR CODE	(2) FEDERAL STOCK NUMBER	(3) DESCRIPTION REF NUMBER & MFR CODE	USABLE ON CODE	(4) UNIT OF MEAS	(5) QTY INC IN UNIT	(6) 30-DAY OS MAINT ALLOWANCE (a) 1-20	(b) 21-50	(c) 51-100	(7) 30-DAY GS MAINT ALLOWANCE (a) 1-20	(b) 21-50	(c) 51-100	(8) 1-YR ALW PER 100 EQUIP CNTGY	(9) DEPOT MAINT ALW PER 100 EQUIP	(10) ILLUS-TRATION (a) FIG. NO.	(b) ITEM NO.
P H	2815-807-1367	WASHER, SPECIAL: BLOCK PLATE MTG 5188274 (72582)		EA	2				*	*	*	*	*	111	10
X2H	2815-999-2348	PLATE ASSEMBLY, BLOCK END 5126194 (72582)		EA	1									111	11
P H	4730-921-6413	NUT, PLUG: PLATE 5121459 (72582)		EA	2				*	*	*	*	*	111	12
X1		GASKET 5133397 (72582) (PART OF PARTS KIT, FSN 2815-947-2951)		EA	1									111	13
P O	4710-437-7147	TUBE ASSEMBLY: AIR DRAIN 5134753 (72582)		EA	2	*	*	*	*	*	*	*	*	111	14
P O	5306-226-4824	BOLT, MACHINE: WATER HOLE COVER MTG, 5/16-18 X 5/8 IN. LG 186618 (72582)		EA	2	*	*	*	*	*	*	*	*	111	15
P O	5310-407-9566	WASHER, LOCK: WATER HOLE COVER MTG, 5/16 IN. MS35338-45 (96906)		EA	2	*	*	*	*	*	*	*	*	111	16
X20	2815-921-5355	COVER, WATER HOLE: CYLINDER BLOCK 5123918 (72582)		EA	1									111	17
P O	2930-613-9397	GASKET 5116357 (72582) (PART OF PARTS KIT, FSN 2815-947-2951)		EA	1	*	*	*	*	*	*	*	*	111	18
P F	5305-206-6776	SCREW, CAP, HEXAGON HEAD: CYLINDER BLOCK HAND HOLE COVER, 3/8-24 X 1 IN. LG 186627 (72582)		EA	4	*	*	*	*	*	*	*	*	111	19
P F	5310-080-6004	WASHER, FLAT: CYLINDER BLOCK HAND HOLE COVER, 3/8 IN. 103341 (72582)		EA	4	*	*	*	*	*	*	*	*	111	20
P F	5330-197-8116	GASKET: CYLINDER HAND HOLE COVER SCREW 105451 (72582) (PART OF PARTS KIT, FSN 2815-947-2951)		EA	4	*	*	*	*	*	*	*	*	111	21
X2F	2815-074-1935	CLAMP, ENGINE BLOCK: HAND HOLE COVER 5130590 (72582)		EA	4									111	22
X2F	2815-921-5386	COVER, HAND HOLE 5183184 (72582)		EA	4									111	23
P F	2815-691-9694	GASKET: CYLINDER BLOCK HAND HOLE COVER 5185416 (72582) (PART OF PARTS KIT, FSN 2815-947-2951)		EA	4	*	*	*	*	*	*	*	*	111	24
P O	6680-403-5967	DIPSTICK, OIL 5179121 (72582)		EA	1	*	*	*	*	*	*	*	*	111	25
P O		NUT, PLAIN, HEXAGON: DIPSTICK TUBE CLAMP, 3/8-16 THD SIZE 117062 (72582)		EA	1	*	*	*	*	*	*	*	*	111	26
P O	5310-261-7340	WASHER, LOCK: DIPSTICK TUBE CLAMP, 3/8 IN. 103321 (72582)		EA	1	*	*	*	*	*	*	*	*	111	27
P O	5310-080-6004	WASHER, FLAT: DIPSTICK TUBE CLAMP, 3/8 IN. 103341 (72582)		EA	1	*	*	*	*	*	*	*	*	111	28
P O	5305-269-3210	SCREW, CAP, HEXAGON HEAD: DIPSTICK TUBE CLAMP, 3/8-16 X 1 IN. LG 180121 (72582)		EA	1	*	*	*	*	*	*	*	*	111	29

(1) SMR CODE	(2) FEDERAL STOCK NUMBER	(3) DESCRIPTION REF NUMBER & MFR CODE	USABLE ON CODE	(4) UNIT OF MEAS	(5) QTY INC IN UNIT	(6) 30-DAY DS MAINT ALLOWANCE (a) 1-20	(b) 21-50	(c) 51-100	(7) 30-DAY GS MAINT ALLOWANCE (a) 1-20	(b) 21-50	(c) 51-100	(8) 1-YR ALW PER 100 EQUIP CNTGY	(9) DEPOT MAINT ALW PER 100 EQUIP	(10) ILLUSTRATION (a) FIG. NO.	(b) ITEM NO.
X20		CLAMP, TUBE: DIPSTICK 5168001 (72582)		EA	1									111	3
X20		BRACKET, CLAMP: DIPSTICK 5173189 (72582)		EA	1									111	3
X20		ADAPTER, DIPSTICK: UPPER 5140689 (72582)		EA	1									111	3
X20		ADAPTER, DIPSTICK: LOWER 5121062 (72582)		EA	1									111	3
P H	2815-921-5364	BOLT, MACHINE: STABILIZER MTG, 7/16-14 X 1 IN. LG 9414523 (72582)		EA	8				*	*	*	*	*	111	3
P H	5310-912-5631	WASHER, FLAT: STABILIZER MTG, 7/16 IN. 5125608 (72582)		EA	8				*	*	*	*	*	111	3
P2H	2815-010-0297	STABILIZER, MAIN BEARING 5132695 (72582)		EA	4				*	*	*	*	*	111	3
P2H R	2815-089-6404	BLOCK ASSEMBLY, ENGINE 5196821 (72582)		EA	1				*	*	*	*	*	111	3
P H	2815-933-0994	BOLT, BEARING CAP 5141701 (72582)		EA	8				*	*	*	*	*	111	3
P H	2815-933-0993	WASHER, BEARING CAP 5133981 (72582)		EA	8				*	*	*	*	*	111	3
X1		PIN 5141263 (72582)		EA	2									111	4
X2H	2815-089-3536	CAP, BEARING, MAIN 5198147 (72582)		EA	4									111	4
P H	2815-089-3536	BEARING,SET, SLEEVE: CAMSHAFT 5197944 (72582)		EA	1				*	*	*	*	*	111	4
P O	4730-277-8273	ELBOW, PIPE TO TUBE: AIR BOX DRAIN 137421 (72582)		EA	2	*	*	*	*	*	*	*	*	111	4
P H	4730-044-4687	PLUG, PIPE: CYLINDER BLOCK, 1/8 IN. NPT 444687 (72582)		EA	4				*	*	*	*	*	111	4
P H	4730-187-4207	PLUG, PIPE: CYLINDER BLOCK, 1/4 IN. NPT 103878 (72582)		EA	1				*	*	*	*	*	111	4
P H	4730-709-2786	PLUG, PIPE: CYLINDER BLOCK, 1/2 IN. NPT 5115214 (72582)		EA	4				*	*	*	*	*	111	4
P H	5340-237-8324	PLUG, EXPANSION: CYLINDER BLOCK, 5/16 IN. 5150130 (72582)		EA	1				*	*	*	*	*	111	4
P H	2815-921-5348	PLUG, EXPANSION: CYLINDER BLOCK, 7/8 IN. 5119218 (72582)		EA	1				*	*	*	*	*	111	4
X1		PIN 141245 (72582)		EA	4									111	4
X20	5305-225-3843	BOLT, MACHINE, 1/4-20 X 1 IN. LG MS90728-8 (96906)		EA	1									111	
X20		BRACKET 5108381 (72582)		EA	1									111	
X20		LEVER, GOVERNOR CONTROL 5151519 (72582)		EA	1									111	
P O	2990-089-7780	SPRING, TORSION 5129711 (72582)		EA	1	*	*	*	*	*	*	*	*	111	

(2) FEDERAL STOCK NUMBER	(3) DESCRIPTION REF NUMBER & MFR CODE	USABLE ON CODE	(4) UNIT OF MEAS	(5) QTY INC IN UNIT	(6) 30-DAY DS MAINT ALLOWANCE (a) 1-20	(b) 21-50	(c) 51-100	(7) 30-DAY GS MAINT ALLOWANCE (a) 1-20	(b) 21-50	(c) 51-100	(8) 1-YR ALW PER 100 EQUIP CNTGY	(9) DEPOT MAINT ALW PER 100 EQUIP	(10) ILLUSTRATION (a) FIG. NO.	(b) ITEM NO.
5310-582-5965	WASHER, LOCK MS25338-44 (96906)		EA	1									111	
	GROUP 17 - AIR SYSTEM													
	HOSE ASSEMBLY: AIR CHAMBER TO SOLENOID VALVE 134125 (23382)		EA	1	*	*	*	*	*	*	*	*	112	1
4730-289-0155	ELBOW, PIPE TO TUBE: AIR LINE. 3/8 IN. TUBE X 3/8 NPT MS[illegible] (06906)		EA	3	*	*	*	*	*	*	*	*	112	2
	NIPPLE, PIPE, CLOSE: AIR LINES, 1/4 IN. NPT 3957 (23382)		EA	5	*	*	*	*	*	*	*	*	112	3
4730-526-0304	CONNECTOR, PIPE: AIR LINES, 1/4 IN. TUBE X 1/4 IN. NPT 205183 (06853)		EA	5	*	*	*	*	*	*	*	*	112	4
	HOSE ASSEMBLY: GOVERNOR AND COMPRESSOR TO ALCOHOL EVAPORATOR 134189 (23382)		EA	2	*	*	*	*	*	*	*	*	112	5
	HOSE ASSEMBLY: COMPRESSOR TO AIR TANK 134190 (23382)		EA	1	*	*	*	*	*	*	*	*	112	6
3810-744-1313	HOSE ASSEMBLY: GOVERNOR TO AIR SUPPLY VALVE 134142 (23382)		EA	1	*	*	*	*	*	*	*	*	112	7
	HOSE ASSEMBLY: BRAKE CHAMBER 138090 (23382)		EA	10	*	*	*	*	*	*	*	*	112	8
	ELBOW, PIPE TO TUBE: ALCOHOL EVAPORATOR LINE, 1/4 TUBE X 1/8 NPT 10000487 (23382)		EA	2	*	*	*	*	*	*	*	*	112	9
	CONNECTOR, STRAIGHT, PIPE TO TUBE: ALCOHOL EVAPORATOR AND COMPRESSOR GOVERNOR LINE, 1/4 TUBE X 1/8 NPT 10000472 (23382)		EA	3	*	*	*	*	*	*	*	*	112	10
4820-886-8796	VALVE, CHECK 275756 (06853)		EA	1	*	*	*	*	*	*	*	*	112	11
4730-701-1964	ELBOW, INLET: COMPRESSOR 236676 (06853)		EA	1	*	*	*	*	*	*	*	*	112	12
4730-289-5196	CONNECTOR, PIPE TO TUBE: AIR TANK AND COMPRESSOR LINE, 5/8 TUBE X 1/2 NPT 10FTX (45681)		EA	2	*	*	*	*	*	*	*	*	112	13
4730-730-7030	FLANGE, PIPE 213042 (06853)		EA	1	*	*	*	*	*	*	*	*	112	14
	ELBOW, PIPE TO TUBE: AIR VALVE AND SERVICE TEE, 1/4 TUBE X 1/4 NPT 10000488 (23382)		EA	3	*	*	*	*	*	*	*	*	112	15
	UNION, PIPE: BRAKE CHAMBERS 2038-4-8 (01276)		EA	10	*	*	*	*	*	*	*	*	112	16
4730-618-7627	ELBOW, PIPE: BRAKE CHAMBERS, 1/4 IN. NPT 4509 (23382)		EA	4	*	*	*	*	*	*	*	*	112	17
	ELBOW, PIPE: QUICK RELEASE VALVE, 3/8 IN. NPT 6515 (23382)		EA	4	*	*	*	*	*	*	*	*	112	18
2530-730-7036	VALVE, CHECK: AIR TANK N13526H (40342)		EA	3	*	*	*	*	*	*	*	*	112	19

(1) SMR CODE	(2) FEDERAL STOCK NUMBER	(3) DESCRIPTION REF NUMBER & MFR CODE	USABLE ON CODE	(4) UNIT OF MEAS	(5) QTY INC IN UNIT	(6) 30-DAY DS MAINT ALLOWANCE (a) 1-20	(b) 21-50	(c) 51-100	(7) 30-DAY GS MAINT ALLOWANCE (a) 1-20	(b) 21-50	(c) 51-100	(8) 1-YR ALW PER 100 EQUIP CNTGY	(9) DEPOT MAINT ALW PER 100 EQUIP	(10) ILLUSTRATION (a) FIG. NO.	(b) ITEM NO.
P O		ELBOW, PIPE: AIR TANK, 1/2 IN. NPT 4538 (23382)		EA	3	*	*	*	*	*	*	*	*	112	20
P O		TUBE, COPPER: AIR VALVE TO COUPING, 5/16 IN. OD, 8 FT REQUIRED 197693 (23382)		FT	V	*	*	*	*	*	*	*	*	112	21
P O	4730-011-8538	NUT, TUBE COUPLING: SERVICE COUPLING TUBE, 5/16 IN. TUBE 41F (30327)		EA	2	*	*	*	*	*	*	*	*	112	22
P O		ADAPTER, PIPE TO TUBE: COUPLING, 5/16 IN. TUBE X 1/4 NPT 10000475 (23382)		EA	2	*	*	*	*	*	*	*	*	112	23
P O		COUPLING, REDUCER, PIPE 9645 (23382)		EA	2	*	*	*	*	*	*	*	*	112	24
X20		COUPLING ASSEMBLY: AIR CONNECTION MS357346 (96906)		EA	3									112	25
P O		ELBOW, PIPE TO TUBE: AIR VALVE, 5/16 IN. TUBE X 1/8 NPT		EA	1	*	*	*	*	*	*	*	*	112	26
P O		COUPLING, PIPE: AIR LINES, 1/8 IN. NPT 10027 (23382)		EA	2	*	*	*	*	*	*	*	*	112	27
P O		COUPLING ASSEMBLY, SERVICE 199432 (23382)		EA	1	*	*	*	*	*	*	*	*	112	28
P O		COUPLING ASSEMBLY, EMERGENCY 199431 (23382)		EA	1	*	*	*	*	*	*	*	*	112	29
P O	2510-753-6271	UNION, ASSEMBLY, FRAME: COUPLING CONNECTING AC2622 (63477)		EA	4	*	*	*	*	*	*	*	*	112	30
P O	4730-069-1187	ELBOW, PIPE TO TUBE: AIR LINE, 3/8 IN. TUBE X 1/4 IN. NPT MS39182-3 (96906)		EA	9	*	*	*	*	*	*	*	*	112	31
P O		TUBE, COPPER: 85 FT REQUIRED, 3/8 IN. OD 197695 (23382)		FT	V	*	*	*	*	*	*	*	*	112	32
P O	4730-069-1186	CONNECTOR, PIPE TO TUBE: AIR LINE, 3/8 IN. TUBE X 1/4 IN. NPT MS39795-5 (96906)		EA	6	*	*	*	*	*	*	*	*	112	33
P O	4730-289-0155	ELBOW, PIPE TO TUBE: 1/2 IN. CROSS, AIR TANK TEE AND CHECK VALVE, 3/8 IN. TUBE X 3/8 NPT MS39182-5 (96906)		EA	6	*	*	*	*	*	*	*	*	112	34
P O	4730-270-4616	CONNECTOR, PIPE TO TUBE: AIR VALVE AND FRONT QUICK RELEASE, 3/8 IN. TUBE X 3/8 NPT MS39179-6 (96906)		EA	2	*	*	*	*	*	*	*	*	112	35
P O	2530-728-7467	VALVE, TWO-WAY CHECK: AIR SYSTEM 280479 (06853)		EA	2	*	*	*	*	*	*	*	*	112	36
P O		TUBE, COPPER: AIR LINES, 1/4 IN. OD, 57 FT REQUIRED 197692 (23382)		FT	V	*	*	*	*	*	*	*	*	112	37
X20		CONNECTOR, PIPE TO TUBE: AIR VALVE, 5/16 IN. TUBE X 1/8 NPT 10000180 (23382)		EA	1									112	38
P O	2530-753-3853	VALVE, AIR SUPPLY 7533853 (19207)		EA	1	*	*	*	*	*	*	*	*	112	39
P O	4730-526-0304	CONNECTOR, PIPE: AIR LINES, 1/4 IN. TUBE X 1/4 NPT 205183 (06853)		EA	2	*	*	*	*	*	*	*	*	112	40

(1) SMR CODE	(2) FEDERAL STOCK NUMBER	(3) DESCRIPTION REF NUMBER & MFR CODE	USABLE ON CODE	(4) UNIT OF MEAS	(5) QTY INC IN UNIT	(6) 30-DAY OS MAINT ALLOWANCE (a) 1-20	(b) 21-50	(c) 51-100	(7) 30-DAY GS MAINT ALLOWANCE (a) 1-20	(b) 21-50	(c) 51-100	(8) 1-YR ALW PER 100 EQUIP CNTGY	(9) DEPOT MAINT ALW PER 100 EQUIP	(10) ILLUSTRATION (a) FIG. NO.	(b) ITEM NO.
P O	4730-288-9490	TEE, PIPE TO TUBE: AIR LINES, 3/8 IN. TUBE X 1/4 NPT 205103 (06853)		EA	3	*	*	*	*	*	*	*	*	112	41
P O	4820-340-1279	VALVE ASSEMBLY, SAFETY: MAIN AND EMERGENCY AIR TANK N1178B (40342)		EA	2	*	*	*	*	*	*	*	*	112	42
P O		TEE, PIPE: AIR TANK AND PROTECTOR VALVE, 1/4 IN. NPT 6575 (23382)		EA	3	*	*	*	*	*	*	*	*	112	43
P O		NIPPLE, CLOSE: 1/4 IN. NPT 3957 (23382)		EA	5	*	*	*	*	*	*	*	*	112	44
P O	4730-332-0040	TEE, COMPRESSION: AIR LINE, 3/8 IN. TUBE X 3/8 NPT 205177 (06853)		EA	2	*	*	*	*	*	*	*	*	112	45
P O		BUSHINE, REDUCER: 1/2 X 3/8 IN. 23382 (6577)		EA	1	*	*	*	*	*	*	*	*	112	46
P O		VALVE ASSEMBLY: TRACTOR PROTECTION 199050 (23382)		EA	1	*	*	*	*	*	*	*	*	112	47
P O		VALVE, SHUT-OFF 278824 (06853)		EA	1	*	*	*	*	*	*	*	*	112	
P O		VALVE, CONTROL 279579 (06853)		EA	1	*	*	*	*	*	*	*	*	112	
P O	2530-927-5613	VALVE, QUICK RELEASE: AIR SYSTEM 229813 (06853)		EA	2	*	*	*	*	*	*	*	*	112	48
P F	5330-832-8569	SEALING RING 242837 (06853)		EA	2	*	*	*	*	*	*	*	*	112	
P F	4820-925-0076	DIAPHRAGM 240011 (06853)		EA	2	*	*	*	*	*	*	*	*	112	
P O		ELBOW, PIPE: INVERSION VALVE AND AUTOMATIC DRAIN VALVE, 1/4 IN. NPT, 45 DEG 6996 (23382)		EA	3	*	*	*	*	*	*	*	*	112	49
P O	4730-585-8378	TEE, PIPE: INVERSION VALVE AND CROSS TUBE, 1/4 IN. NPT 30907 (23382)		EA	2	*	*	*	*	*	*	*	*	112	50
P O	2530-730-7034	VALVE, INVERSION 277340 (06853)		EA	1	*	*	*	*	*	*	*	*	112	51
P O		TUBE, COPPER: AIR LINES, 1/2 IN. OD, 30 FT REQUIRED 197696 (23382)		FT	V	*	*	*	*	*	*	*	*	112	52
P O	2530-730-7036	VALVE, CHECK: AIR TANK N13526H (40342)		EA	1	*	*	*	*	*	*	*	*	112	53
P O	4730-595-2572	ELBOW, PIPE TO TUBE: AIR TANK LINES, 1/2 IN. TUBE X 1/2 IN. NPT 216310 (06853)		EA	2	*	*	*	*	*	*	*	*	112	54
P O	4730-737-7855	TEE, PIPE TO TUBE: 1/2 X 3/8 IN. TUBE X 3/8 IN. NPT 215703 (06853)		EA	1	*	*	*	*	*	*	*	*	112	55
P O	4730-289-0155	ELBOW, PIPE TO TUBE: 3/8 IN. TUBE X 3/8 NPT MS39182-5 (96906)		EA	1	*	*	*	*	*	*	*	*	112	56
P O	4730-332-0040	TEE, PIPE: AIR TANK, 3/8 IN. NPT 6997 (23382)		EA	1	*	*	*	*	*	*	*	*	112	57
P O		BUSHING, PIPE REDUCING, 1/2 X 3/8 IN. 6577 (23382)		EA	5	*	*	*	*	*	*	*	*	112	58

(1) SMR CODE	(2) FEDERAL STOCK NUMBER	(3) DESCRIPTION REF NUMBER & MFR CODE	USABLE ON CODE	(4) UNIT OF MEAS	(5) QTY INC IN UNIT	(6) 30-DAY DS MAINT ALLOWANCE (a) 1-20	(b) 21-50	(c) 51-100	(7) 30-DAY GS MAINT ALLOWANCE (a) 1-20	(b) 21-50	(c) 51-100	(8) 1-YR ALW PER 100 EQUIP CNTGY	(9) DEPOT MAINT ALW PER 100 EQUIP	(10) ILLUSTRATION (a) FIG. NO.	(b) ITEM NO.
P O	4730-698-5001	ELBOW, PIPE TO TUBE: EMERGENCY CONTROL VALVE AND AIR HORN, 3/8 IN. TUBE X 1/8 NPT 205522 (06853)		EA	2	*	*	*	*	*	*	*	*	112	59
P O	4730-202-7301	ADAPTER, STRAIGHT, PIPE TO TUBE: BRAKE CONTROL VALVES, 3/8 IN. TUBE X 1/8 NPT 205509 (06853)		EA	3	*	*	*	*	*	*	*	*	112	60
P O	4730-196-2067	NIPPLE, PIPE: BRAKE CONTROL VALVE CONNECTING, 1/8 IN. NPT, 1 1/2 IN. LG		FT	1	*	*	*	*	*	*	*	*	112	61
P O		PLUG, PIPE: EMERGENCY CONTROL VALVE, 1/8 IN. NPT 4500 (23382)		EA	1	*	*	*	*	*	*	*	*	112	62
P O		TEE, REDUCING: 3/8 X 1/4 IN. NPT 10130069 (23382)		EA	3	*	*	*	*	*	*	*	*	112	63
P O	5930-888-9865	SWITCH, PRESSURE: STOP LIGHT AND REAR STEER LOCK MS75062-1 (96906)		EA	2	*	*	*	*	*	*	*	*	112	64
P O		HOSE ASSEMBLY: REAR STEER LOCK TO STOP LIGHT SWITCH AND CROSS 138094 (23382)		EA	2	*	*	*	*	*	*	*	*	113	1
P O		HOSE ASSEMBLY: BRAKE CHAMBER 138090 (23382)		EA	6									113	2
P O		HOSE ASSEMBLY: CROSS TO SEAT 138092 (23382)		EA	1	*	*	*	*	*	*	*	*	113	3
P O		HOSE ASSEMBLY: TWO-WAY LOCK CONTROL VALVE AND TRAILER VALVE TO COUPLING 138093 (23382)		EA	2	*	*	*	*	*	*	*	*	113	4
P O		HOSE ASSEMBLY: AIR GAGE TO LOW PRESSURE SWITCH 138091 (23382)		EA	1	*	*	*	*	*	*	*	*	113	5
P O		TUBE, COPPER: AIR LINES 197692 (23382)		FT	V	*	*	*	*	*	*	*	*	113	6
P O		TUBE, COPPER: AIR LINE 197695 (23382)		EA	V	*	*	*	*	*	*	*	*	113	7
P O	4730-618-7627	ELBOW, PIPE: BRAKE CHAMBER, 1/4 IN. NPT 4509 (23382)		EA	5	*	*	*	*	*	*	*	*	113	8
P O		UNION, PIPE: BRAKE CHAMBERS 2038-4-8 (01276)		EA	4	*	*	*	*	*	*	*	*	113	9
P O	4730-069-1187	ELBOW, PIPE TO TUBE: AIR LINE MS39182-3 (96906)		EA	4	*	*	*	*	*	*	*	*	113	10
X20		BLOCK, FITTING AC484 (63477)		EA	1									113	11
P O		CONNECTOR, TUBE 1013003 (23382)		EA	2	*	*	*	*	*	*	*	*	113	12
P O		ELBOW, PIPE: AIR LINE, 3/8 IN. NPT 6515 (23382)		EA	2	*	*	*	*	*	*	*	*	113	13
P O	2530-927-5613	VALVE, QUICK RELEASE: AIR SYSTEM 229813 (06853)		EA	1	*	*	*	*	*	*	*	*	113	14
P O		TEE, PIPE: AIR LINE, 1/4 IN. PIPE, 3/8 IN. TUBE 10000278 (23382)		EA	3	*	*	*	*	*	*	*	*	113	15

(1) SMR CODE	(2) FEDERAL STOCK NUMBER	(3) DESCRIPTION REF NUMBER & MFR CODE	USABLE ON CODE	(4) UNIT OF MEAS	(5) QTY INC IN UNIT	(6) 30-DAY DS MAINT ALLOWANCE (a) 1-20	(b) 21-50	(c) 51-100	(7) 30-DAY GS MAINT ALLOWANCE (a) 1-20	(b) 21-50	(c) 51-100	(8) 1-YR ALW PER 100 EQUIP CNTGY	(9) DEPOT MAINT ALW PER 100 EQUIP	(10) ILLUSTRATION (a) FIG. NO.	(b) ITEM NO.
P O	4730-289-0155	ELBOW, PIPE TO TUBE: AIR LINE, 3/8 IN. TUBE X 3/8 NPT MS39182-5 (96906)		EA	1	*	*	*	*	*	*	*	*	113	16
P O		BUSHING, REDUCER: CHECK VALVE AND POWER ELUSTER, 1/4 X 3/8 IN. NPT 2970 (23382)		EA	3	*	*	*	*	*	*	*	*	113	17
P O	2530-728-7467	VALVE, TWO-WAY AIR SYSTEM 280479 (06853)		EA	1									113	18
P O	4730-069-1187	ELBOW, PIPE TO TUBE: AIR LINE, 3/8 IN. TUBE X 1/4 IN. NPT MS39182-3 (96906)		EA	2	*	*	*	*	*	*	*	*	113	19
P O		BUSHING, REDUCER AIR LINE, 1/2 X 1/4 IN. NPT 7425 (23382)		EA	2	*	*	*	*	*	*	*	*	113	20
P O		NIPPLE, CLOSE: 1/4 IN. NPT 3957 (23382)		EA	2	*	*	*	*	*	*	*	*	113	21
P O	4730-069-1186	CONNECTOR, PIPE TO TUBE: AIR LINE, 3/8 IN. TUBE X 1/4 IN. NPT MS39795-5 (96906)		EA	2	*	*	*	*	*	*	*	*	113	22
P O	4730-288-9490	TEE, PIPE TO TUBE: AIR LINE, 3/8 IN. TUBE X 1/4 NPT 205103 (06853)		EA	1	*	*	*	*	*	*	*	*	113	23
P O	2530-353-2922	VALVE, TWO-WAY CHECK 32922 (63477)		EA	2	*	*	*	*	*	*	*	*	113	24
P O		BUSHING, REDUCER: CHECK VALVE, 1/2 X 1/4 IN. NPT 7425 (23382)		EA	2	*	*	*	*	*	*	*	*	113	25
P O		NIPPLE, PIPE: AIR VALVE, 1/4 NPT X 1 1/2 IN. LG 3953 (23382)		EA	1	*	*	*	*	*	*	*	*	113	26
P O	4730-270-4616	CONNECTOR, PIPE TO TUBE, 3/8 IN. TUBE X 3/8 NPT MS39179-6 (96906)		EA	1	*	*	*	*	*	*	*	*	113	27
P O	4730-289-0155	ELBOW, PIPE TO TUBE: AIR LINE, 3/8 IN. TUBE X 3/8 NPT MS39182-5 (96906)		EA	1	*	*	*	*	*	*	*	*	113	28
P O		BUSHING, PIPE: AIR LINES, 1/2 X 3/8 IN. 6577 (23382)		EA	5	*	*	*	*	*	*	*	*	113	29
P O		TUBE, COPPER: AIR LINE, 1/2 IN., 30 FT 197696 (23382)		FT	V	*	*	*	*	*	*	*	*	113	30
P O		CONNECTOR, PIPE TO TUBE: CROSS TO AIR TANK LINE, 1/2 IN. TUBE X 1/2 NPT 217691 (06853)		EA	1	*	*	*	*	*	*	*	*	113	31
P O		NIPPLE, PIPE, CLOSE: AIR VALVE TO CROSS, 1/2 IN. NPT 121208 (00000)		EA	1	*	*	*	*	*	*	*	*	113	32
P O		CROSS, PIPE: AIR LINES, 1/2 IN. NPT 35771 (23382)		EA	1	*	*	*	*	*	*	*	*	113	33
P O		ELBOW, W/NUT: AIR LINE 1000032 (23382)		EA	3	*	*	*	*	*	*	*	*	113	34
P O	4730-277-8750	CONNECTOR, PIPE TO TUBE: AIR LINE, 1/4 IN. TUBE X 1/8 NPT MS39179-1 (96906)		EA	4	*	*	*	*	*	*	*	*	113	35

(1) SMR CODE	(2) FEDERAL STOCK NUMBER	(3) DESCRIPTION REF NUMBER & MFR CODE	USABLE ON CODE	(4) UNIT OF MEAS	(5) QTY INC IN UNIT	(6) 30-DAY DS MAINT ALLOWANCE (a) 1-20	(b) 21-50	(c) 51-100	(7) 30-DAY GS MAINT ALLOWANCE (a) 1-20	(b) 21-50	(c) 51-100	(8) 1-YR ALW PER 100 EQUIP CNTGY	(9) DEPOT MAINT ALW PER 100, EQUIP
P O		COUPLING, ASSEMBLY: ONE-WAY SHUT-OFF 199197 (23382)		EA	2	*	*	*	*	*	*	*	*
P O		CONNECTOR, PIPE TO TUBE: WIPER LINES, 1/4 IN. TUBE X 1/8 NPT 4FTX (45681)		EA	2	*	*	*	*	*	*	*	*
P O		HOSE ASSEMBLY: WIPER VALVE TO MOTOR 134170 (23382)		EA	2	*	*	*	*	*	*	*	*
P O		COUPLING, PIPE: AIR LINE, 1/8 IN. NPT 10027 (23382)		EA	1	*	*	*	*	*	*	*	*
P O	4730-580-2504	NIPPLE, PIPE: REGULATOR AND WIPER VALVE, 1/8 IN. NPT 6568 (23382)		EA	2	*	*	*	*	*	*	*	*
P O		ELBOW, PIPE TO TUBE: AIR LINE, 1/8 IN. PIPE, 1/4 IN. TUBE 10615085 (23382)		EA	2	*	*	*	*	*	*	*	*
P O		TEE, PIPE: WIPER VALVE, 1/4 IN. TUBE X 1/8 NPT 10000152 (23382)		EA	1	*	*	*	*	*	*	*	*
P F		VALVE, PRESSURE REGULATOR: WINDSHIELD WIPER MS53018-1 (96906)		EA	1	*	*	*	*	*	*	*	*
P O	5355-413-0145	KNOB, VALVE C1353 (82484)		EA	1	*	*	*	*	*	*	*	*
P O	5310-189-1825	NUT, PLAIN, HEXAGON: VALVE, 7/16-28 THD SIZE F549 (82484)		EA	1	*	*	*	*	*	*	*	*
P O	4730-526-0304	CONNECTOR, PIPE: 1/4 IN. TUBE X 1/4 NPT 205183 (06853)		EA	2	*	*	*	*	*	*	*	*
P O		CONNECTOR, MALE: REAR STEER LOCK LINE, 1/4 IN. TUBE X 1/4 NPT 10615038 (23382)		EA	1	*	*	*	*	*	*	*	*
P O		ELBOW, PIPE TO TUBE: AIR LINE, 1/4 IN. TUBE X 1/4 NPT 10000488 (23382)		EA	1	*	*	*	*	*	*	*	*
P O	4730-585-8378	TEE, PIPE: AIR LINE, 1/4 IN. NPT 30907 (23382)		EA	1	*	*	*	*	*	*	*	*
P O	4730-069-1187	ELBOW, PIPE TO TUBE: AIR LINE, 3/8 IN. TUBE X 1/4 IN. NPT MS39182-3 (96906)		EA	4	*	*	*	*	*	*	*	*
P O	4730-278-6319	COUPLING, PIPE: AIR LINE 205465 (06853)		EA	1	*	*	*	*	*	*	*	*
P O		NIPPLE, PIPE: AIR LINE, 1/4 IN. NPT 3957 (23382)		EA	2	*	*	*	*	*	*	*	*
P O		CROSS, PIPE: AIR LINES, 1/4 IN. NPT 36760 (23382)		EA	1	*	*	*	*	*	*	*	*
P O	4730-278-0173	ELBOW, PIPE TO TUBE: WIPER MOTOR AND TRAILER VALVE, 1/4 IN. TUBE X 1/8 IN. NPT 205539 (06853)		EA	3	*	*	*	*	*	*	*	*
P O		ELBOW, PIPE TO TUBE: AIR LINES, 1/4 IN. TUBE X 1/8 NPT MS20822-4B (96906)		EA	4	*	*	*	*	*	*	*	*

(1) SMR CODE	(2) FEDERAL STOCK NUMBER	(3) DESCRIPTION REF NUMBER & MFR CODE	USABLE ON CODE	(4) UNIT OF MEAS	(5) QTY INC IN UNIT	(6) 30-DAY DS MAINT ALLOWANCE (a) 1-20	(b) 21-50	(c) 51-100	(7) 30-DAY GS MAINT ALLOWANCE (a) 1-20	(b) 21-50	(c) 51-100	(8) 1-YR ALW PER 100 EQUIP CNTGY	(9) DEPOT MAINT ALW PER 100 EQUIP	(10) ILLUSTRATION (a) FIG. NO.	(b) ITEM NO.
P O		NUT, TUBE COUPLING: AIR LINE, 1/4 IN. TUBE 10615035 (23382)		EA	4	*	*	*	*	*	*	*	*	113	54
P O		SLEEVE, COMPRESSION: AIR LINE, 1/4 IN. TUBE 10615037 (23382)		EA	4	*	*	*	*	*	*	*	*	113	55
P O		UNION, TUBE: AIR LINE, 1/4 IN. TUBE 10615239 (23382)		EA	2	*	*	*	*	*	*	*	*	113	56
P O	4730-118-5177	ELBOW ASSEMBLY: POWER CLUSTER, 1/4 IN. TUBE X 1/4 NPT 224318 (06853)		EA	1	*	*	*	*	*	*	*	*	113	57
P O		BUSHING, REDUCING, 1/4 IN. X 3/8 IN. NPT 2970 (23382)		EA	3	*	*	*	*	*	*	*	*	113	58
P O	4730-277-8750	CONNECTOR, PIPE TO TUBE: 1/8 IN. PIPE, 1/4 IN. TUBE MS39179-1 (96906)		EA	2	*	*	*	*	*	*	*	*	113	59
P O	4730-263-2733	TEE, PIPE: REAR STEER LOCK, 1/8 IN. NPT 547002 (00000)		EA	1	*	*	*	*	*	*	*	*	113	60
P O	2530-728-7468	VALVE, CHECK: TWO-WAY LOCK CONTROL 229636 (06853)		EA	2	*	*	*	*	*	*	*	*	113	61
P O	4730-580-2504	NIPPLE, PIPE: CLOSE, 1/4 IN. 6568 (23382)		EA	2	*	*	*	*	*	*	*	*	113	62
P O		TEE, PIPE TO TUBE: REGULATOR, 1/4 IN. TUBE X 1/8 NT 10000351 (23382)		EA	1	*	*	*	*	*	*	*	*	113	63
P O	2530-126-8532	REGULATOR, PRESSURE 11-101-001 (43990)		EA	1	*	*	*	*	*	*	*	*	113	64
P O		TEE, PIPE TO TUBE: STOP LIGHT AND LOW AIR SWITCH, 1/4 X 1/4 TUBE X 1/8 NPT 10615228 (23382)		EA	2	*	*	*	*	*	*	*	*	113	65
P O		SWITCH, PRESSURE 7064400 (00000)		EA	1	*	*	*	*	*	*	*	*	113	66
P O		BUSHING, REDUCER: STOP LIGHT AND LOW AIR SWITCH, 1/4 X 1/8 IN. NPT 6572 (23382)		EA	2	*	*	*	*	*	*	*	*	113	67
P O	6685-489-8758	GAGE, AIR PRESSURE 360BS (57733)		EA	1	*	*	*	*	*	*	*	*	113	68
P O		COUPLING, AIR GAGE, 1/4 IN. TUBE X 1/8 NPT 4GTX (45681)		EA	1	*	*	*	*	*	*	*	*	113	69
P O		NUT, TUBE COUPLING, 1/4 IN. TUBE 10615035 (23382)		EA	2	*	*	*	*	*	*	*	*	113	70
P O		SLEEVE, COMPRESSION: 5/16 IN. 10615037 (23382)		EA	2	*	*	*	*	*	*	*	*	113	71
P O		TEE, PIPE TO TUBE: 1/4 X 1/4 TUBE X 1/8 NPT 10615228 (23382)		EA	1	*	*	*	*	*	*	*	*	113	72
P O		BUSHING, REDUCING: 1/4 X 1/8 IN. NPT 6572 (23382)		EA	1	*	*	*	*	*	*	*	*	113	73
P O	5930-058-1576	SWITCH, LOW AIR PRESSURE MS27152-1 (96906)		EA	1	*	*	*	*	*	*	*	*	113	74

(1) SMR CODE	(2) FEDERAL STOCK NUMBER	(3) DESCRIPTION REF NUMBER & MFR CODE	USABLE ON CODE	(4) UNIT OF MEAS	(5) QTY INC IN UNIT	(6) 30-DAY DS MAINT ALLOWANCE (a) 1-20	(b) 21-50	(c) 51-100	(7) 30-DAY GS MAINT ALLOWANCE (a) 1-20	(b) 21-50	(c) 51-100	(8) 1-YR ALW PER 100 EQUIP CNTGY	(9) DEPOT MAINT ALW PER 100 EQUIP	(10) ILLUSTRATION (a) FIG. NO.	(b) ITEM NO.
P O	4730-069-1186	CONNECTOR, PIPE TO TUBE: AIR LINE, 3/8 IN. TUBE X 1/4 IN. NPT MS39795-5 (96906)		EA	2	*	*	*	*	*	*	*	*	113	75
P O	4730-069-1187	ELBOW, PIPE TO TUBE: AIR LINE, 3/8 IN. TUBE X 1/4 IN. NPT MS39182-3 (96906)		EA	4	*	*	*	*	*	*	*	*	113	76
P O	2510-753-6271	UNION, TUBE: AIR LINE AC2622 (63477)		EA	2	*	*	*	*	*	*	*	*	113	77
P O		COUPLING, PIPE: SERVICE COUPLING, 1/2 IN. NPT 6569 (23382)		EA	2	*	*	*	*	*	*	*	*	113	78
P O		NIPPLE, PIPE: FRONT SERVICE AND EMERGENCY COUPLING, 1/2 IN. NPT X 2 1/2 IN. LG 3425 (23382)		EA	4	*	*	*	*	*	*	*	*	113	79
X20		COUPLING, DUMMY: AIR CONNECTING MS35746 (96906)		EA	1									113	80
P O	2530-728-7471	VALVE, SHUT-OFF: AIR LINE, FRONT EMERGENCY 10125061 (23382)		EA	1	*	*	*	*	*	*	*	*	113	81
P O	4730-698-5001	ELBOW, PIPE TO TUBE: 3/8 IN. TUBE X 1/8 NPT 205522 (06853)		EA	1	*	*	*	*	*	*	*	*	113	82
P O		TEE, PIPE TO TUBE: AIR LINE, 1/4 IN. PIPE, 3/8 IN. TUBE 10000278 (23382)		EA	3	*	*	*	*	*	*	*	*	113	83
P O		SCREW, CAP, HECAGON HEAD: HORN COVER MTG, 3/8-24 X 3/4 IN. LG 4000 (23382)		EA	2	*	*	*	*	*	*	*	*	114	1
P O	5310-018-7123	WASHER, LOCK: HORN COVER MTG, 3/8 IN. 4313 (23382)		EA	2	*	*	*	*	*	*	*	*	114	2
X20		COVER, HORN 334470 (23382)		EA	1									114	3
P O		TUBE, COPPER: HORN AIR 197691 (23382)		EA	1	*	*	*	*	*	*	*	*	114	4
P O		FITTING, ELBOW: HORN AIR 10000106 (23382)		EA	1	*	*	*	*	*	*	*	*	114	5
P O	5310-851-2674	NUT, PLAIN, HEXAGON: HORN MTG, 1/4-20 THD SIZE MS35691-1 (96906)		EA	2	*	*	*	*	*	*	*	*	114	6
P O	5310-018-7241	WASHER, LOCK: HORN MTG, 1/4 IN 4312 (23382)		EA	2	*	*	*	*	*	*	*	*	114	7
P O	5305-068-0502	SCREW, CAP, HEXAGON HEAD: HORN MTG, 1/4-20 X 3/4 IN. LG 4188 (23382)		EA	2	*	*	*	*	*	*	*	*	114	8
P O	2590-900-1640	HORN, FLUID OPERATED MS51301-1 (96906)		EA	1	*	*	*	*	*	*	*	*	114	9
P O		VALVE, AIR CONTROL: TRAILER BRAKE 275791 (06853)		EA	1	*	*	*	*	*	*	*	*	115	1
X1		ROLL PIN 238379 (06853)		EA	1									115	2
X1		BUTTON 240920 (06853)		EA	1									115	3
P O		NUT, PLAIN, HEXAGON: MTG, 7/8-20 THD SIZE 239357 (06853)		EA	1	*	*	*	*	*	*	*	*	115	4

(1) SMR CODE	(2) FEDERAL STOCK NUMBER	(3) DESCRIPTION REF NUMBER & MFR CODE	USABLE ON CODE	(4) UNIT OF MEAS	(5) QTY INC IN UNIT	(6) 30-DAY OS MAINT ALLOWANCE (a) 1-20	(b) 21-50	(c) 51-100	(7) 30-DAY GS MAINT ALLOWANCE (a) 1-20	(b) 21-50	(c) 51-100	(8) 1-YR ALW PER 100 EQUIP CNTGY	(9) DEPOT MAINT ALW PER 100 EQUIP	(10) ILLUSTRATION (a) FIG. NO.	(b) ITEM NO.
P O		VALVE 276567 (06853)		EA	1	*	*	*	*	*	*	*	*	115	5
P O	2530-931-8370	VALVE, CONTROL: EMERGENCY AIR BRAKE 277897 (06853)		EA	1	*	*	*	*	*	*	*	*	115	6
X1		PIN 238379 (06853)		EA	1									115	7
X1		BUTTON 243062 (06853)		EA	1									115	8
P O		NUT, PLAIN, HEXAGON: 7/8-20 THD SIZE 239357 (06853)		EA	1	*	*	*	*	*	*	*	*	115	9
X1		DIAL 242406 (06853)		EA	1									115	10
P O	2530-755-7282	VALVE 276462 (06853)		EA	1	*	*	*	*	*	*	*	*	115	11
P O		PLUG, PIPE: EMERGENCY AIR TANK, 1/2 IN. NPT 4503 (23382)		EA	1	*	*	*	*	*	*	*	*	116	1
P O		VALVE, DRAIN, AUTOMATIC: EMERGENCY AIR TANK 281923 (06853)		EA	1	*	*	*	*	*	*	*	*	116	2
P O		ADAPTER AND FILTER ASSEMBLY 281925 (06853)		EA	1	*	*	*	*	*	*	*	*	116	3
P O	4730-427-5121	PLUG, PIPE: DRAIN VALVE 238807 (06853)		EA	1	*	*	*	*	*	*	*	*	116	4
P O	5310-975-2075	NUT, PLAIN, HEXAGON: AIR TANK MTG, 3/88-24 THD SIZE MS35691-21 (96906)		EA	4	*	*	*	*	*	*	*	*	116	5
P O	5310-018-7123	WASHER, LOCK: AIR TANK MTG, 3/8 IN. 4313 (23382)		EA	4	*	*	*	*	*	*	*	*	116	6
P O	5305-269-3236	SCREW, CAP, HEXAGON HEAD: AIR TANK MTG, 3/8-24 X 1 IN. LG		EA	4	*	*	*	*	*	*	*	*	116	7
X20		BRACKET, AIR TANK C2348 (97109)		EA	2									116	8
P O	5310-012-3221	NUT, PLAIN, HEXAGON: BRACKET, 3/8-16 THD SIZE 1289 (13841)		EA	2	*	*	*	*	*	*	*	*	116	9
P O	5310-018-7123	WASHER, LOCK: BRACKET, 3/8 IN. 187123 (24617)		EA	2	*	*	*	*	*	*	*	*	116	10
P O		SCREW, CAP, HEXAGON HEAD: BRACKET, 3/8-16 X 6 IN. LG A2299 (97109)		EA	2	*	*	*	*	*	*	*	*	116	11
X1		BRACKET C2348-1 (97109)		EA	4									116	12
P O		TANK AIR: EMERGENCY 226503 (06853)		EA	1	*	*	*	*	*	*	*	*	116	13
P O		VALVE, DRAIN, AUTOMATIC: MAIN AIR TANK 281924 (06853)		EA	2	*	*	*	*	*	*	*	*	116	14
P O		ADAPTER AND FILTER ASSEMBLY 281926 (06853)		EA	2	*	*	*	*	*	*	*	*	116	15
P O	4730-427-5121	PLUG, PIPE: DRAIN VALVE 238807 (06853)		EA	2	*	*	*	*	*	*	*	*	116	16

(1) SMR CODE	(2) FEDERAL STOCK NUMBER	(3) DESCRIPTION REF NUMBER & MFR CODE	USABLE ON CODE	(4) UNIT OF MEAS	(5) QTY INC IN UNIT	(6) 30-DAY DS MAINT ALLOWANCE (a) 1-20	(b) 21-50	(c) 51-100	(7) 30-DAY GS MAINT ALLOWANCE (a) 1-20	(b) 21-50	(c) 51-100	(8) 1-YR ALW PER 100 EQUIP CNTGY	(9) DEPOT MAINT ALW PER 100 EQUIP	(10) ILLUSTRATION (a) FIG. NO.	(b) ITEM NO.
P O	4730-618-7627	ELBOW, PIPE, STREET: AIR TANK VALVE ADAPTER, 1/4 IN. NPT 4509 (23382)		EA	1	*	*	*	*	*	*	*	*	116	17
P O	5310-975-2075	NUT, PLAIN, HEXAGON: AIR TANK MTG, 3/8-24 THD SIZE MS35691-21 (96906)		EA	8	*	*	*	*	*	*	*	*	116	18
P O	5310-018-7123	WASHER, LOCK: AIR TANK MTG, 3/8 IN. 4313 (23382)		EA	8	*	*	*	*	*	*	*	*	116	19
P O	5305-269-3236	SCREW, CAP, HEXAGON HEAD: AIR TANK MTG, 3/8-24 X 1 IN. LG		EA	8	*	*	*	*	*	*	*	*	116	20
X20		BRACKET, SIDE: AIR TANK C2349 (97109)		EA	4									116	21
P O	5310-012-3221	NUT, PLAIN, HEXAGON: TANK BRACKET, 3/8-16 THD SIZE 1289 (13841)		EA	4	*	*	*	*	*	*	*	*	116	22
P O	5310-018-7123	WASHER, LOCK: TANK BRACKET, 3/8 IN. 1B7123 (24617)		EA	4	*	*	*	*	*	*	*	*	116	23
P O		SCREW, CAP, HEXAGON HEAD: TANK BRACKET, 3/8-16 X 6 IN. LG A2299 (97109)		EA	4	*	*	*	*	*	*	*	*	116	24
X1		BRACKET B2349-1 (97109)		EA	8									116	25
P O	2530-730-6958	TANK AIR· MAIN 226153 (13841)		EA	2	*	*	*	*	*	*	*	*	116	26
X20		BRACE: AIR TANK TIE 331584 (23382)		EA	1									116	27
P O	5305-282-4209	SCREW, MACHINE: LOCK CONTROL VALVE MTG, NO. 10-32 THD SIZE X 1/2 IN. LG 35376 (13841)		EA	4	*	*	*	*	*	*	*	*	116	
P O	5310-531-0525	WASHER, FLAT: LOCK CONTROL VALVE MTG, NO. 10 SCREW SIZE 25021 (13841)		EA	4	*	*	*	*	*	*	*	*	116	
P O	5310-515-9962	WASHER, LOCK: VALVE MTG, 1/4 IN. FFW84 (81348)		EA	2	*	*	*	*	*	*	*	*	116	
P O		NUT, PLAIN, HEXAGON: 5/16-24 THD SIZE 4202 (23382)		EA	8	*	*	*	*	*	*	*	*	116	
P O		WASHER, LOCK: VALVE MTG, 5/16 IN. 4318 (23382)		EA	8	*	*	*	*	*	*	*	*	116	
P O	5306-225-9089	BOLT, MACHINE: VALVE MTG, 5/16-24 X 1 IN. LG MS90726-34 (96906)		EA	8	*	*	*	*	*	*	*	*	116	
P O	5305-637-4639	SCREW, CAP, HEXAGON HEAD: VALVE MTG, 1/4-28 X 2 IN. LG		EA	2	*	*	*	*	*	*	*	*	116	
P O	5310-660-2649	NUT, PLAIN, HEXAGON: VALVE MTG, 1/4-28 THD SIZE MS35690-424 (96906)		EA	2	*	*	*	*	*	*	*	*	116	
P O	5305-637-4639	SCREW, CAP, HEXAGON HEAD: SHUT-OFF VALVE MTG, 1/4-28 X 2 IN. LG		EA	4	*	*	*	*	*	*	*	*	116	
P O	5310-515-9962	WASHER, LOCK: SHUT-OFF VALVE MTG, 1/4 IN. FFW84 (81348)		EA	4	*	*	*	*	*	*	*	*	116	
P O	5310-660-2649	NUT, PLAIN, HEXAGON: SHUT-OFF VALVE MTG, 1/4-28 THD SIZE MS35690-424 (96906)		EA	4	*	*	*	*	*	*	*	*	116	

(1) SMR CODE	(2) FEDERAL STOCK NUMBER	(3) DESCRIPTION REF NUMBER & MFR CODE	USABLE ON CODE	(4) UNIT OF MEAS	(5) QTY INC IN UNIT	(6) 30-DAY DS MAINT ALLOWANCE (a) 1-20	(b) 21-50	(c) 51-100	(7) 30-DAY GS MAINT ALLOWANCE (a) 1-20	(b) 21-50	(c) 51-100	(8) 1-YR ALW PER 100 EQUIP CNTGY	(9) DEPOT MAINT ALW PER 100 EQUIP	(10) ILLUSTRATION (a) FIG. NO.	(b) ITEM NO.
		GROUP 18 - CONTROLS, INSTRUMENT PANELS AND HEATER													
P 0		SHAFT, DRIVE, FLEXIBLE: SPEED SENSING SWITCH 199463 (23382)		EA	1	*	*	*	*	*	*	*	*	117	1
P 0	5310-012-4818	NUT, PLAIN, HEXAGON: SPEED SENSING SWITCH MTG, 1/4-20 THD SIZE 30361 (23382)		EA	2	*	*	*	*	*	*	*	*	117	2
P 0	5310-018-7241	WASHER, LOCK: SPEED SENSING SWITCH MTG, 1/4 IN. 4312 (23382)		EA	2	*	*	*	*	*	*	*	*	117	3
P 0	5310-595-6165	WASHER, FLAT: SPEED SENSING SWITCH SPACING, 1/4 IN.		EA	4	*	*	*	*	*	*	*	*	117	4
P 0	5305-225-3839	SCREW, CAP, HEXAGON HEAD: SPEED SENSING SWITCH MTG, 1/4-20 X 1 IN. LG 4124 (23382)		EA	2	*	*	*	*	*	*	*	*	117	5
X20		BRACKET: SPEED SENSING SWITCH MTG 332157 (23382)		EA	1									117	6
P 0		SWITCH, SPEED SENSING 87342 (23382)		EA	1	*	*	*	*	*	*	*	*	117	7
P 0	5360-352-6438	SPRING, HELICAL, EXTENSION: CONTROL RETURN 1774 (23382)		EA	1	*	*	*	*	*	*	*	*	118	1
X20		BRACKET, SPRING ANCHOR 334596 (23382)		EA	1									118	2
P 0		NUT, SELF-LOCKING, HEXAGON: CABLE TO SWIVEL BLOCK, 1/4-28 THD SIZE 10275060 (23382)		EA	2	*	*	*	*	*	*	*	*	118	3
P 0		NUT, PLAIN, HEXAGON: ADAPTER MTG, 5/16-24 THD SIZE A50901-035 (41625)		EA	1	*	*	*	*	*	*	*	*	118	4
P 0		WASHER, LOCK: ADAPTER MTG, 5/16 IN. A50803-085 (41625)		EA	1	*	*	*	*	*	*	*	*	118	5
P 0		BOLT, MACHINE: ADAPTER MTG, 5/16-24 X 3/4 IN. LG A50408-719 (41625)		EA	1	*	*	*	*	*	*	*	*	118	6
P 0		NUT, SELF-LOCKING, HEXAGON: SWIVEL BLOCK, 1/4-28 THD SIZE 10275060 (23382)		EA	2	*	*	*	*	*	*	*	*	118	7
X20		BLOCK, SWIVEL 333861 (23382)		EA	2									118	8
X20		ADAPTER, LEVER A42594 (41625)		EA	1									118	9
P 0		CONTROL, THROTTLE 043145-3 (41625)		EA	1	*	*	*	*	*	*	*	*	118	10
P 0		NUT, PLAIN, HEXAGON: CLAMP MTG, NO. 10-32 THD SIZE A50901-076 (41625)		EA	2	*	*	*	*	*	*	*	*	118	11
P 0		WASHER, LOCK: CLAMP MTG, NO. 10 A50803-059 (41625)		EA	2	*	*	*	*	*	*	*	*	118	12
P 0		SCREW, MACHINE: CLAMP MTG, NO. 10-32 X 5/8 IN. LG A50112-561 (41625)		EA	2	*	*	*	*	*	*	*	*	118	13
X20		CLAMP, CABLE A31532 (41625)		EA	1									118	14
X20		SHIM, CLAMP A31538 (41625)		EA	1									118	15

		REF NUMBER & MFR CODE	ON CODE	OF MEAS	IN UNIT	1-20	21-50	51-100	1-20	21-50	51-100	EQUIP CNTGY	100 EQUIP	FIG. NO.	ITEM NO.
X20		SCREW, CAP, HEXAGON HEAD: BRACKET MTG, 3/8-16 X 5 1/2 IN. LG A50407-947 (41625)		EA	2									118	16
X20		WASHER, LOCK: BRACKET MTG, 3/8 IN. A50803-095 (41625)		EA	2									118	17
X20		NUT, PLAIN, HEXAGON: BRACKET, 1/4-28 THD SIZE A50901-016 (41625)		EA	2									118	18
X20		WASHER, LOCK: BRACKET, 1/4 IN. A50803-077 (41625)		EA	2									118	19
X20		SCREW, MACHINE: BRACKET, 1/4-28 X 5/8 IN. LG A50146-561 (41625)		EA	2									118	20
X20		BRACKET ASSEMBLY: CABLE A21600 (41625)		EA	1									118	21
X20		BRACKET ASSEMBLY: CABLE BRACKET B33392 (41625)		EA	1									118	22
P O		NUT, PLAIN, HEXAGON: CABLE BRACKET, 5/16-24 THD SIZE 4202 (23382)		EA	2	*	*	*	*	*	*	*	*	118	23
P O		WASHER, LOCK: CABLE BRACKET, 5/16 IN. 4318 (23382)		EA	2	*	*	*	*	*	*	*	*	118	24
P O	5310-964-3415	WASHER, FLAT: CABLE BRACKET, 5/16 IN.		EA	2	*	*	*	*	*	*	*	*	118	25
P O	5306-225-9089	BOLT, MACHINE: CABLE BRACKET, 5/16-24 X 1 IN. LG MS90726-34 (96906)		EA	2	*	*	*	*	*	*	*	*	118	26
X20		BRACKET, THROTTLE CABLE 334071 (23382)		EA	1									118	27
X20		BRACKET, THROTTLE 334072 (23382)		EA	1									118	28
P O	5315-839-2325	PIN, COTTER: CABLE TO PEDAL MS24665-132 (96906)		EA	1	*	*	*	*	*	*	*	*	118	29
X20		PIN, CLEVIS: CABLE TO PEDAL 10165149 (23382)		EA	1									118	30
X20		CLEVIS, ROD END 310881 (23382)		EA	1									118	31
P O	5310-014-2247	NUT, PLAIN, HEXAGON: CLEVIS LOCK, 1/4-28 THD SIZE 4200 (23382)		EA	2	*	*	*	*	*	*	*	*	118	32
P O		CABLE, FLEXIBLE, THROTTLE: FOOT CONTROL 199935 (23382)		EA	1	*	*	*	*	*	*	*	*	118	33
P O		NUT, PLAIN, HEXAGON: GUIDE MTG, 1/4-28 THD SIZE A200 (23382)		EA	2	*	*	*	*	*	*	*	*	118	34
P O		WASHER, LOCK: GUIDE MTG, 1/4 IN. MS35337-44 (96906)		EA	2	*	*	*	*	*	*	*	*	118	35
P O		WASHER, FLAT: GUIDE MTG, 1/4 IN. 6487 (23382)		EA	1	*	*	*	*	*	*	*	*	118	36
P O	5305-267-8979	SCREW, CAP, HEXAGON HEAD: GUIDE MTG, 1/4-28 X 1 3/4 IN. LG		EA	2	*	*	*	*	*	*	*	*	118	37
X20		PLATE, GUIDE 332162 (23382)		EA	1									118	38
X20		GUIDE: ACCELERATOR PEDAL 332159 (23382)		EA	1									118	39
P O		NUT, PLAIN, HEXAGON: PEDAL MTG, 5/16-24 THD SIZE 4202 (23382)		EA	1	*	*	*	*	*	*	*	*	118	40

(1) SMR CODE	(2) FEDERAL STOCK NUMBER	(3) DESCRIPTION REF NUMBER & MFR CODE	USABLE ON CODE	(4) UNIT OF MEAS	(5) QTY INC IN UNIT	(6) 30-DAY DS MAINT ALLOWANCE (a) 1-20	(b) 21-50	(c) 51-100	(7) 30-DAY GS MAINT ALLOWANCE (a) 1-20	(b) 21-50	(c) 51-100	(8) 1-YR ALW PER 100 EQUIP CNTGY	(9) DEPOT MAINT ALW PER 100 EQUIP	(10) ILLUSTRATION (a) FIG. NO.	(b) ITEM NO.
P O		WASHER, LOCK: PEDAL MTG, 5/16 IN. 4318 (23382)		EA	1	*	*	*	*	*	*	*	*	118	41
P O	5306-225-9089	BOLT, MACHINE: PEDAL MTG, 5/16-24 X 1 IN. LG MS90726-34 (96906)		EA	1	*	*	*	*	*	*	*	*	118	42
X20		PEDAL, ACCELERATOR 332146 (23382)		EA	1									118	43
P O	5305-269-2801	SCREW, CAP, HEXAGON HEAD: PEDAL STOP MTG, 3/8-24 X 3/4 IN. LG		EA	1	*	*	*	*	*	*	*	*	118	44
P O	5310-680-7297	WASHER, LOCK: PEDAL STOP MTG, 3/8 IN.		EA	1	*	*	*	*	*	*	*	*	118	45
P O	5305-269-2808	SCREW, CAP, HEXAGON HEAD: PEDAL STOP, 3/8-24 X 1 3/4 IN. LG		EA	1	*	*	*	*	*	*	*	*	118	46
P O	5310 531-1194	NUT, PLAIN, HEXAGON: PEDAL STOP, 3/8-24 THD SIZE		EA	1	*	*	*	*	*	*	*	*	118	47
X20		STOP: ACCELERATOR PEDAL 308612 (23382)		EA	1									118	48
P F	5315-839-5822	PIN, COTTER: TRANSFER SHIFT ROD, 1/8 IN. DIA, 3/4 IN. LG MS24665-353 (96906)		EA	2	*	*	*	*	*	*	*	*	119	1
X2F		PIN, CLEVIS: TRANSFER SHIFT ROD 120005 (23382)		EA	2									119	2
X2F		CLEVIS, ROD END: TRANSFER SHIFT ROD 333827 (23382)		EA	1									119	3
P F	2530-898-4805	NUT, PLAIN, HEXAGON: TRANSFER SHIFT ROD, 1/2-10 THD SIZE 4216 (23382)		EA	1	*	*	*	*	*	*	*	*	119	4
X2F		ROD, TRANSFER SHIFT 330687 (23382)		EA	1									119	5
P F		PIN, COTTER: TRANSFER SHIFT LEVER MOUNTING 4381 (23382)		EA	1	*	*	*	*	*	*	*	*	119	6
P F	5310-896-8961	WASHER, FLAT: TRANSFER SHIFT LEVER 30839 (23382)		EA	1	*	*	*	*	*	*	*	*	119	7
P O	4730-050-4208	FITTING, LUBRICATION MS15003-1 (96906)		EA	1	*	*	*	*	*	*	*	*	119	8
P O	5355-152-8353	KNOB: GEAR SHIFT 4715 (73460)		EA	1	*	*	*	*	*	*	*	*	119	9
X2F		LEVER, TRANSFER SHIFT 332016 (23382)		EA	1									119	10
P O	5315-151-8882	PIN, COTTER: CONTROL CABLE, 3/32 IN. DIA, 7/8 IN. LG 4356 (23382)		EA	2	*	*	*	*	*	*	*	*	120	1
X20		PIN, CLEVIS: CONTROL CABLE 4461 (23382)		EA	2									120	2
X20		CLEVIS, ROD END: CONTROL CABLE 307502 (23382)		EA	2									120	3
P O	5310 975-2075	NUT, PLAIN, HEXAGON: CLEVIS LOCKING, 3/8-24 THD SIZE MS35691-21 (96906)		EA	2	*	*	*	*	*	*	*	*	120	4
P O		CABLE ASSEMBLY, CONTROL D48505 (41625)		EA	1	*	*	*	*	*	*	*	*	120	5
X20		LEVER, CONTROL: TRANSMISSION RANGE SELECTOR VALVE 331583 (23382)		EA	1									120	6
P O		NUT, PLAIN, HEXAGON: SHIFT TOWER MTG, 5/16-24 THD SIZE 4202 (23382)		EA	4	*	*	*	*	*	*	*	*	120	7

(1) SMR CODE	(2) FEDERAL STOCK NUMBER	(3) DESCRIPTION REF NUMBER & MFR CODE	USABLE ON CODE	(4) UNIT OF MEAS	(5) QTY INC IN UNIT	(6) 30-DAY DS MAINT ALLOWANCE (a) 1-20	(b) 21-50	(c) 51-100	(7) 30-DAY GS MAINT ALLOWANCE (a) 1-20	(b) 21-50	(c) 51-100	(8) 1-YR ALW PER 100 EQUIP CNTGY	(9) DEPOT MAINT ALW PER 100 EQUIP	(10) ILLUSTRATION (a) FIG. NO.	(b) ITEM NO.
P O		WASHER, LOCK: SHIFT TOWER MTG, 5/16 IN. 4318 (23382)		EA	4	*	*	*	*	*	*	*	*	120	8
P O	5306-225-9089	BOLT, MACHINE: SHIFT TOWER MTG, 5/16-24 X 1 IN. LG MS90726-34 (96906)		EA	4	*	*	*	*	*	*	*	*	120	9
X20		TOWER ASSEMBLY, SHIFT 331625 (23382)		EA	1									120	10
P O		SCREW, TAPPING, THREAD CUTTING: WIRE COVER MTG, NO. 10 X 1/2 IN. LG 161146 (23382)		EA	3	*	*	*	*	*	*	*	*	120	11
X20		COVER, WIRE 332367 (23382)		EA	1									120	12
P O	5315-839-2325	PIN, COTTER: CLEVIS PIN MS24665-132 (96906)		EA	1	*	*	*	*	*	*	*	*	120	13
P O		PIN, YOKE 10165149 (23382)		EA	1	*	*	*	*	*	*	*	*	120	14
X20		PLATE, SHIFT LOCK 331578 (23382)		EA	1									120	15
X20		YOKE, ROD END: SOLENOID 331574 (23382)		EA	1									120	16
P O		NUT, PLAIN, HEXAGON: YOKE, SOLENOID, NO. 10-32 THD SIZE 6961 (23382)		EA	1	*	*	*	*	*	*	*	*	120	17
P O		NUT, PLAIN, HEXAGON: SOLENOID MTG, 5/16-24 THD SIZE 4202 (23382)		EA	2	*	*	*	*	*	*	*	*	120	18
P O		WASHER, LOCK: SOLENOID MTG, 5/16 IN. 4318 (23382)		EA	2	*	*	*	*	*	*	*	*	120	19
P O		BOLT, MACHINE: SOLENOID MTG, 5/16-24 X 1 3/4 IN. LG 4220 (23382)		EA	2	*	*	*	*	*	*	*	*	120	20
P O		SOLENOID, ELECTRICAL SA376-24V (78388)		EA	1	*	*	*	*	*	*	*	*	120	21
P O	5310-014-2247	NUT, PLAIN, HEXAGON: GUIDE PLATE MTG, 1/4-28 THD SIZE 4200 (23382)		EA	4	*	*	*	*	*	*	*	*	120	22
P O	5310-018-7241	WASHER, LOCK: GUIDE PLATE MTG, 1/4 IN. 4312 (23382)		EA	4	*	*	*	*	*	*	*	*	120	23
P O		SCREW, CAP, HEXAGON HEAD: GUIDE PLATE MTG, 1/4-28 X 3 IN. LG 4640 (23382)		EA	4	*	*	*	*	*	*	*	*	120	24
X20		PLATE, GUIDE 331581 (23382)		EA	2									120	25
X20		SPACER, GUIDE PLATE 331582 (23382)		EA	2									120	26
P O	5315-151-8882	PIN, COTTER: SHIFT LEVER, 3/32 IN. DIA, 7/8 IN. LG 4356 (23382)		EA	1	*	*	*	*	*	*	*	*	120	27
P O		PIN, CLEVIS: SHIFT LEVER 4461 (23382)		EA	1	*	*	*	*	*	*	*	*	120	28
X20		ROD, SHIFT 331577 (23382)		EA	1									120	29
P O		BEARING, SPHERICAL: SHIFT ROD 84581 (23382)		EA	1	*	*	*	*	*	*	*	*	120	30

(1) SMR CODE	(2) FEDERAL STOCK NUMBER	(3) DESCRIPTION REF NUMBER & MFR CODE	USABLE ON CODE	(4) UNIT OF MEAS	(5) QTY INC IN UNIT	(6) 30-DAY DS MAINT ALLOWANCE (a) 1-20	(b) 21-50	(c) 51-100	(7) 30-DAY GS MAINT ALLOWANCE (a) 1-20	(b) 21-50	(c) 51-100	(8) 1-YR ALW PER 100 EQUIP CNTGY	(9) DEPOT MAINT ALW PER 100 EQUIP	(10) ILLUSTRATION (a) FIG. NO.	(b) ITEM NO.
P O	5930-927-8482	SWITCH, MICRO: NEUTRAL SAFETY BZ2RQ1A2 (91929)		EA	1	*	*	*	*	*	*	*	*	120	31
P O		NUT, SELF-LOCKING, HEXAGON: SHIFT LEVER MTG, 1/2-20 THD SIZE 10275013 (23382)		EA	1	*	*	*	*	*	*	*	*	120	32
P O	5305-688-2338	SCREW, CAP, HEXAGON HEAD: SHIFT LEVER MTG, 1/2-20 X 2 1/4 IN. LG 4110 (23382)		EA	1	*	*	*	*	*	*	*	*	120	33
P O	5355-020-9542	KNOB, SHIFT 195903 (23382)		EA	1	*	*	*	*	*	*	*	*	120	34
P O		BUSHING, BRASS: SHIFT LEVER 331580 (23382)		EA	1	*	*	*	*	*	*	*	*	120	35
P O		NUT, PLAIN, HEXAGON: MICROSWITCH ACTUATING SCREW, NO. 8-32 THD SIZE 1911 (23382)		EA	1	*	*	*	*	*	*	*	*	120	36
P O		SCREW, MACHINE: MICROSWITCH ACTUATING, NO. 8-32 X 1/2 IN. LG 162108 (23382)		EA	1	*	*	*	*	*	*	*	*	120	37
X20		LEVER, SHIFT 331576 (23382)		EA	1									120	38
P O		NUT, PLAIN, HEXAGON: MICROSWITCH AND BRACKET MTG, NO. 6-32 THD SIZE 4438 (23382)		EA	6	*	*	*	*	*	*	*	*	120	39
P O		WASHER, LOCK: MICROSWITCH AND BRACKET MTG, NO. 6 164656 (23382)		EA	6	*	*	*	*	*	*	*	*	120	40
P O		SCREW, MACHINE: MICROSWITCH BRACKET MTG, NO. 6-32 X 1/2 IN. LG 162092 (23382)		EA	2	*	*	*	*	*	*	*	*	120	41
P O		SCREW, MACHINE: MICROSWITCH MTG, NO. 6-32 X 1 IN. LG 162096 (23382)		EA	4	*	*	*	*	*	*	*	*	120	42
P O		SWITCH, MICRO 6PL4 (91929)		EA	1	*	*	*	*	*	*	*	*	120	43
P O	5930-847-6149	SWITCH, SENSITIVE DT2RS1A7 (91929)		EA	1	*	*	*	*	*	*	*	*	120	44
X20		BRACKET, MICROSWITCH 332368 (23382)		EA	1									120	45
X20		SHIM: MICROSWITCH, 20 GAGE 334520 (23382)		EA	V									120	46
X20		TOWER, SHIFT 331575 (23382)		EA	1									120	47
P O	5305-068-0502	SCREW, CAP, HEXAGON HEAD: RELAY COVER MTG, 1/4-20 X 3/4 IN. LG 4188 (23382)		EA	2	*	*	*	*	*	*	*	*	121	1
P O	5310-209-1869	WASHER, LOCK: RELAY COVER MTG, 1/4 IN. 4347 (41226)		EA	2	*	*	*	*	*	*	*	*	121	2
X20		COVER, RELAY BOX 334480 (23382)		EA	1									121	3
P O	5310-022-5853	NUT, PLAIN, HEXAGON: RELAY MTG, 5/16-24 THD SIZE		EA	2	*	*	*	*	*	*	*	*	121	4
P O	5310-901-0279	WASHER, LOCK: RELAY MTG, 5/16 IN.		EA	2	*	*	*	*	*	*	*	*	121	5
P O	5306-225-9089	BOLT, MACHINE: RELAY MTG, 5/16-24 X 1 IN. LG MS90726-34 (96906)		EA	2	*	*	*	*	*	*	*	*	121	6

(1) SMR CODE	(2) FEDERAL STOCK NUMBER	(3) DESCRIPTION REF NUMBER & MFR CODE	USABLE ON CODE	(4) UNIT OF MEAS	(5) QTY INC IN UNIT	(6) 30-DAY DS MAINT ALLOWANCE (a) 1-20	(b) 21-50	(c) 51-100	(7) 30-DAY GS MAINT ALLOWANCE (a) 1-20	(b) 21-50	(c) 51-100	(8) 1-YR ALW PER 100 EQUIP CNTGY	(9) DEPOT MAINT ALW PER 100 EQUIP	(10) ILLUSTRATION (a) FIG. NO.	(b) ITEM NO.
P O	2590-953-2179	RELAY ASSEMBLY: TURN SIGNAL MS18041-1 (96906)		EA	1	*	*	*	*	*	*	*	*	121	7
P O	5305-988-1723	SCREW, MACHINE: DIMMER SWITCH BRACKET, 1/4-20 X 1/2 IN. LG MS35206-279 (96906)		EA	2	*	*	*	*	*	*	*	*	121	8
P O	5310-209-1869	WASHER, LOCK: DIMMER SWITCH BRACKET, 1/4 IN. 4347 (41226)		EA	2	*	*	*	*	*	*	*	*	121	9
P O	5310 014-2247	NUT, PLAIN, HEXAGON: BEAM SELECTOR SWITCH MTG, 1/4-28 THD SIZE 4200 (23382)		EA	2	*	*	*	*	*	*	*	*	121	10
P O	5310-018-7241	WASHER, LOCK: BEAM SELECTOR SWITCH MTG, 1/4 IN. 4312 (23382)		EA	2	*	*	*	*	*	*	*	*	121	11
P O	5305-068-0504	SCREW, CAP, HEXAGON HEAD: BEAM SELECTOR SWITCH MTG, 1/4-28 X 1/2 IN. LG MS90726-3 (96906)		EA	2	*	*	*	*	*	*	*	*	121	12
P O	2590-801-2355	SWITCH, LIGHT: BEAM SELECTOR 1997027 (16764)		EA	1	*	*	*	*	*	*	*	*	121	13
X20		BRACKET: DIMMER SWITCH 329670 (23382)		EA	1									121	14
X20		CLAMP, TURN SIGNAL A6-1-2 (70403)		EA	1									121	15
P O		CONTROL, TURN SIGNAL 137000 (23382)		EA	1	*	*	*	*	*	*	*	*	121	16
P O	6240-155-8714	LAMP, INCANDESCENT: TURN SIGNAL 313 (08805)		EA	1	*	*	*	*	*	*	*	*	121	17
P O	5945-054-4380	FLARESTAT ASSEMBLY 05-24V (77977)		EA	1	*	*	*	*	*	*	*	*	121	18
P O	5945-054-4381	FLASHER, ELECTRICAL 121F432-24V (77977)		EA	1	*	*	*	*	*	*	*	*	121	19
X1		KNOB 24-343 (77977)		EA	1									121	20
P O	6240-155-7866	LAMP, INCANDESCENT MS15573-3 (96906)		EA	1	*	*	*	*	*	*	*	*	121	21
X1		NUT 33-114 (77977)		EA	1									121	22
P O		FUSE, FLARESTAT 7-1-2AMP (77977)		EA	1	*	*	*	*	*	*	*	*	121	23
P O		HEATER ASSEMBLY 60076G8 (46522)		EA	1	*	*	*	*	*	*	*	*	122	
P F		SCREW, TAPPING: FRONT MTG 106100060613 (46522)		EA	4	*	*	*	*	*	*	*	*	122	1
X2F	2540-924-6266	FRONT ASSEMBLY 60600G1 (46522)		EA	1									122	2
X2F		PANEL, BOTTOM 60455G1-2 (46522)		EA	1									122	3
P F	2540-725-4067	CORE, FLEXIBLE SHAFT 60526G1 (46522)		EA	1	*	*	*	*	*	*	*	*	122	4
P F		NUT, PLAIN, HEXAGON: MOTOR MTG 42083213 (46522)		EA	2	*	*	*	*	*	*	*	*	122	5
P F		WASHER, FLAT: MOTOR SPACING 51-36-13 (46522)		EA	2	*	*	*	*	*	*	*	*	122	6
X2F		FAN ASSEMBLY 60000G1 (46522)		EA	1									122	7

(1) SMR CODE	(2) FEDERAL STOCK NUMBER	(3) DESCRIPTION REF NUMBER & MFR CODE	USABLE ON CODE	(4) UNIT OF MEAS	(5) QTY INC IN UNIT	(6) 30-DAY DS MAINT ALLOWANCE (a) 1-20	(b) 21-50	(c) 51-100	(7) 30-DAY GS MAINT ALLOWANCE (a) 1-20	(b) 21-50	(c) 51-100	(8) 1-YR ALW PER 100 EQUIP CNTGY	(9) DEPOT MAINT ALW PER 100 EQUIP	(10) ILLUSTRATION (a) FIG. NO.	(b) ITEM NO.
P F	2540-725-4067	MOTOR ASSEMBLY 60529G3 (46522)		EA	1	*	*	*	*	*	*	*	*	122	8
P F		GROMMET, RUBBER 60828G1 (46522)		EA	1	*	*	*	*	*	*	*	*	122	9
X2F		CASING ASSEMBLY 60527G1-2 (46522)		EA	1									122	10
X20	6210-699-9458	LAMP ASSEMBLY, PANEL 8376500 (19207)		EA	3									123	1
X20		LIGHT, INDICATOR: RH DIRECTIONAL 136751 (23382)		EA	1									123	2
X20		LIGHT, INDICATOR: LH DIRECTIONAL 136752 (23382)		EA	1									123	3
X20		LIGHT, INDICATOR: HIGH BEAM 136756 (23382)		EA	1									123	4
P O	6240-266-9940	LAMP, INCANDESCENT: INDICATOR LIGHT MS25231-1829 (96906)		EA	6	*	*	*	*	*	*	*	*	123	5
P O		LIGHT, INDICATOR: DOWNSHIFT WARNING LIGHT 136999 (23382)		EA	1	*	*	*	*	*	*	*	*	123	6
P O		LIGHT, INDICATOR: HIGH TEMPERATURE 137006 (23382)		EA	1	*	*	*	*	*	*	*	*	123	7
P O		LIGHT, INDICATOR: OIL PRESSURE 137007 (23382)		EA	1	*	*	*	*	*	*	*	*	123	8
P O		LIGHT, INDICATOR: REAR STEER 137004 (23382)		EA	1	*	*	*	*	*	*	*	*	123	9
P O		LIGHT, INDICATOR: TRACTION LOCK 137005 (23382)		EA	1	*	*	*	*	*	*	*	*	123	10
P O		LIGHT, INDICATOR: TRANSMISSION 137008 (23382)		EA	1	*	*	*	*	*	*	*	*	123	11
P O	6240-266-9940	LAMP, INCANDESCENT: INDICATOR LIGHT MS25231-1829 (96906)		EA	6	*	*	*	*	*	*	*	*	123	12
P O		LIGHT, INDICATOR: OUTRIGGER AND BOOM LIGHT 1-380667-2 (04618)		EA	5	*	*	*	*	*	*	*	*	123	13
P O	6685-936-2139	INDICATOR, TEMPERATURE MS24543-2 (96906)		EA	1	*	*	*	*	*	*	*	*	123	14
P O	6620-115-9042	GAGE, OIL PRESSURE MS24540-2 (96906)		EA	1	*	*	*	*	*	*	*	*	123	15
P O	6680-933-3600	INDICATOR, LIQUID: FUEL MS24544-2 (96906)		EA	1	*	*	*	*	*	*	*	*	123	16
P O	6625-961-6178	GENERATOR METER: INDICATOR MS24532 (96906)		EA	1	*	*	*	*	*	*	*	*	123	17
P O	6685-993-5548	GAGE, OIL TEMPERATURE: TRANSMISSION MS24542-2 (96906)		EA	1	*	*	*	*	*	*	*	*	123	18
P O	2920-420-7776	SWITCH, STARTER 1996097 (24617)		EA	1	*	*	*	*	*	*	*	*	123	19
P O	5930-296-6318	SWITCH, TOGGLE: BOOM LIGHTS MS39061-1 (96906)		EA	1	*	*	*	*	*	*	*	*	123	20
P O	5930-226-6429	SWITCH, TOGGLE: CONVERTER LOCK-UP AND HEATER MS39061-4 (96906)		EA	2	*	*	*	*	*	*	*	*	123	21
P O	2590-307-8856	SWITCH, MAIN MS51113-1 (96906)		EA	1	*	*	*	*	*	*	*	*	123	22
P O	5930-020-9535	SWITCH, PUSH: BUZZER CUTOUT 9001 (13445)		EA	1	*	*	*	*	*	*	*	*	123	23

(1) SMR CODE	(2) FEDERAL STOCK NUMBER	(3) DESCRIPTION REF NUMBER & MFR CODE	USABLE ON CODE	(4) UNIT OF MEAS	(5) QTY INC IN UNIT	(6) 30-DAY DS MAINT ALLOWANCE (a) 1-20	(b) 21-50	(c) 51-100	(7) 30-DAY GS MAINT ALLOWANCE (a) 1-20	(b) 21-50	(c) 51-100	(8) 1-YR ALW PER 100 EQUIP CNTGY	(9) DEPOT MAINT ALW PER 100 EQUIP	(10) ILLUSTRATION (a) FIG. NO.	(b) ITEM NO.
P O	5930-679-9956	SWITCH, STOP LIGHT: DIFFERENTIAL AND REAR STEER LOCK F5106 (63477)		EA	2	*	*	*	*	*	*	*	*	123	24
P O	5310-012-4818	NUT, PLAIN, HEXAGON: INSTRUCTION PLATE BRACKET MTG, 1/4-20 THD SIZE		EA	3	*	*	*	*	*	*	*	*	124	1
P O	5310-209-1869	WASHER, LOCK: INSTRUCTION PLATE BRACKET MTG, 1/4 IN. 1885 (13841)		EA	3	*	*	*	*	*	*	*	*	124	2
P O	5305-068-0502	SCREW, CAP, HEXAGON HEAD: INSTRUCTION PLATE BRACKET MTG, 1/4-20 X 3/4 IN. LG		EA	3	*	*	*	*	*	*	*	*	124	3
X20		BRACKET, MOUNTING: INSTRUCTION PLATE 17168 (13841)		EA	1									124	4
P O		SCREW, TAPPING, THREAD CUTTING: REAR COVER MTG, NO. 10-32 X 3/8 IN. LG 160521 (23382)		EA	8	*	*	*	*	*	*	*	*	124	5
X20		COVER, REAR INSTRUMENT PANEL 332202 (23382)		EA	1									124	6
P O		SHAFT ASSEMBLY, FLEXIBLE: TACHOMETER MS51071-18 (96906)		EA	1	*	*	*	*	*	*	*	*	124	7
P O	6680-514-4090	TACHOMETER 503B (57733)		EA	1	*	*	*	*	*	*	*	*	124	8
P O		ADAPTER, SPEEDOMETER 668SC (57733)		EA	1	*	*	*	*	*	*	*	*	124	9
P O	6680-507-9980	SHAFT ASSEMBLY, FLEXIBLE MS51071-20 (96906)		EA	1	*	*	*	*	*	*	*	*	124	10
P O		SPEEDOMETER, MECHANICAL MS39021 (96906)		EA	1	*	*	*	*	*	*	*	*	124	11
P O	5305-988-1723	SCREW, MACHINE: CONTROL PANEL MTG, 1/4-20 X 1/2 IN. LG MS35206-279 (96906)		EA	14	*	*	*	*	*	*	*	*	124	12
P O	5310-209-1869	WASHER, LOCK: CONTROL PANEL MTG, 1/4 IN. 4347 (41226)		EA	14	*	*	*	*	*	*	*	*	124	13
X20		SHIELD, SUN: CONTROL PANEL 333614 (23382)		EA	1									124	14
X20		PANEL, INSTRUMENT: RH 74285 (23382)		EA	1									124	15
X20		PANEL, INSTRUMENT: CENTER 74283 (23382)		EA	1									124	16
X20		PANEL, INSTRUMENT: LH 74286 (23382)		EA	1									124	17
P O	6685-064-6954	TRANSMITTER, TEMPERATURE: TRANSMISSION 6401085 (70040)		EA	1	*	*	*	*	*	*	*	*	125	1
P O	3930-082-6580	THERMOSTAT, TRANSMISSION 1514371 (70040)		EA	1	*	*	*	*	*	*	*	*	125	2
P O	6685-814-5271	TRANSMITTER, TEMPERATURE: ENGINE COOLANT AND TRANSMISSION TEMPERATURE MS24537-1 (96906)		EA	2	*	*	*	*	*	*	*	*	125	3
P O	5930-670-2340	SWITCH, PRESSURE: LOW OIL PRESSURE 1508696 (70040)		EA	1	*	*	*	*	*	*	*	*	125	4
P O	6220-993-5546	TRANSMITTER, PRESSURE: OIL MS24539-1 (96906)		EA	1	*	*	*	*	*	*	*	*	125	5
P O	6350-507-3141	BUZZER: LOW AIR PRESSURE 88164M2 (80252)		EA	1	*	*	*	*	*	*	*	*	125	6

(1) SMR CODE	(2) FEDERAL STOCK NUMBER	(3) DESCRIPTION REF NUMBER & MFR CODE	USABLE ON CODE	(4) UNIT OF MEAS	(5) QTY INC IN UNIT	(6) 30-DAY DS MAINT ALLOWANCE (a) 1-20	(b) 21-50	(c) 51-100	(7) 30-DAY GS MAINT ALLOWANCE (a) 1-20	(b) 21-50	(c) 51-100	(8) 1-YR ALW PER 100 EQUIP CNTGY	(9) DEPOT MAINT ALW PER 100 EQUIP	(10) ILLUSTRATION (a) FIG. NO.	(b) ITEM NO.
P O	5945-965-9885	RELAY, ELECTRICAL: DOWNSHIFT INHIBITOR AND HEATER 1115842 (16764)		EA	2	*	*	*	*	*	*	*	*	125	7
P F	5930 543-0214	SWITCH, PRESSURE 1507667 (70040)		EA	1	*	*	*	*	*	*	*	*	125	8
P O		VALVE, SOLENOID: REAR STEER LOCK CUTOUT V55DB2100 (81978)		EA	1	*	*	*	*	*	*	*	*	125	9
P O		VALVE, SOLENOID: TRANSMISSION LOCKUP V55DB2100 (81978)		EA	1	*	*	*	*	*	*	*	*	125	10
P O	5925-026-4767	CIRCUIT BREAKER MS39062-1 (96906)		EA	6	*	*	*	*	*	*	*	*	125	11
P O		RELAY, TIME DELAY 4-016272 (15605)		EA	1	*	*	*	*	*	*	*	*	125	12
X20		GROMMET, RUBBER 191658 (23382)		EA	2									125	
M O	2590-191-0804	LEAD, ELECTRICAL 135079 (23382) MANUFACTURE FROM:		EA	1									125	
P O		LUG, TERMINAL 5281907 (77060)		EA	2	*	*	*	*	*	*				
P O		STRAP, COPPER 54402R (77060)		EA	1	*	*	*	*	*	*				
P O	5935-846-3884	RECEPTACLE, TRAILER MS75021-2 (96906)		EA	1	*	*	*	*	*	*	*	*	125	
P O		WIRE, HEATER SWITCH 136855 (19207)		EA	1	*	*	*	*	*	*	*	*	125	
P F		HARNESS ASSEMBLY, WIRING: CONTROL PANEL 136998 (23382)		EA	1	*	*	*	*	*	*	*	*	125	
P F		HARNESS ASSEMBLY: SIGNAL CONTROL TO RELAY BOX 136846 (23382)		EA	1	*	*	*	*	*	*	*	*	125	
P F		HARNESS, ALTERNATOR 136847 (23382)		EA	1	*	*	*	*	*	*	*	*	125	
P F		HARNESS, TRANSMISSION 136848 (23382)		EA	1	*	*	*	*	*	*	*	*	125	
P F		HARNESS, REAR IDENTIFICATION LIGHTS 136849 (23382)		EA	1	*	*	*	*	*	*	*	*	125	
P F		HARNESS, CIRCUIT BREAKER 136850 (23382)		EA	1	*	*	*	*	*	*	*	*	125	
P F		HARNESS, CARRIER 136858 (23382)		EA	1	*	*	*	*	*	*	*	*	125	
P F		HARNESS, CHASSIS 136857 (23382)		EA	1	*	*	*	*	*	*	*	*	125	
P F		HARNESS, ENGINE 136859 (23382)		EA	1	*	*	*	*	*	*	*	*	125	
P F		HARNESS, MAIN LIGHT SWITCH 136860 (23382)		EA	1	*	*	*	*	*	*	*	*	125	
P F		HARNESS, TRAILER PLUG 136861 (23382)		EA	1	*	*	*	*	*	*	*	*	125	
X2F		STRIP, JUMPER 329759 (23382)		EA	2									125	
X2F		STRIP, JUMPER 329760 (23382)		EA	1									125	
X2F	5940-942-2848	STRIP, TERMINAL 4721P6 (13445)		EA	1									125	

(1) SMR CODE	(2) FEDERAL STOCK NUMBER	(3) DESCRIPTION REF NUMBER & MFR CODE	USABLE ON CODE	(4) UNIT OF MEAS	(5) QTY INC IN UNIT	(6) 30-DAY DS MAINT ALLOWANCE (a) 1-20	(b) 21-50	(c) 51-100	(7) 30-DAY GS MAINT ALLOWANCE (a) 1-20	(b) 21-50	(c) 51-100	(8) 1-YR ALW PER 100 EQUIP CNTGY	(9) DEPOT MAINT ALW PER 100 EQUIP	(10) ILLUSTRATION (a) FIG. NO.	(b) ITEM NO.
P F		WIRE GROUP, MISCELLANEOUS 136856 (23382)		EA	1	*	*	*	*	*	*	*	*	125	
		GROUP 19 - BRAKE CONTROL SYSTEM													
P O	5306-225-9087	BOLT, MACHINE: TRAILER BRAKE HAND VALVE MTG, 5/16-24 X 3/4 IN. LG MS90726-32 (96906)		EA	2	*	*	*	*	*	*	*	*	126	1
P O		WASHER, LOCK: TRAILER BRAKE HAND VALVE MTG, 5/16 IN. 4318 (23382)		EA	2	*	*	*	*	*	*	*	*	126	2
X20		WASHER, FLAT: TRAILER BRAKE HAND VALVE MTG, 5/16 IN.		EA	2									126	3
X20		BRACKET: TRAILER BRAKE HAND VALVE 329867 (23382)		EA	1									126	4
P O	2530-728-7469	VALVE, HAND: TRAILER BRAKE N3973F (40342)		EA	1	*	*	*	*	*	*	*	*	126	
X2F		SCREW, MACHINE: BRACKET MTG 3X331 (40342)		EA	4									126	5
X2F		WASHER, LOCK: BRACKET MTG 4X109 (40342)		EA	4									126	6
X2F		BRACKET: LH 100524A (40342)		EA	1									126	7
X2F		BRACKET: RH 100523A (40342)		EA	1									126	7
X2F		NUT, ACORN: HANDLE MTG 2X64 (40342)		EA	1									126	8
X2F		WASHER, LOCK: HANDLE MTG 4X11 (40342)		EA	1									126	9
X2F		HANDLE, CONTROL N15660B (40342)		EA	1									126	10
X2F		NUT, SELF-LOCKING: HANDLE SHAFT MOUNTING 2X5505 (40342)		EA	1									126	11
X2F		SHAFT, SHOULDERED N15638 (40342)		EA	1									126	12
X2F		VALVE ASSEMBLY, BASIC N3990B (40342)		EA	1									126	13
X1		NUT 2X64 (40342)		EA	4									126	14
X1		WASHER, LOCK 4X11 (40342)		EA	4									126	15
X1		COVER N20814A (40342)		EA	1									126	16
X1		STUD, PLAIN 14X1172 (40342)		EA	4									126	17
X1		SETSCREW 3X210 (40342)		EA	1									126	18
X1		SPRING C13375 (40342) (PART OF KIT, FSN 2530-728-7470)		EA	1									126	19
X1		PLUNGER N15626 (40342)		EA	1									126	20
X1		CAM N15624 (40342)		EA	1									126	21
X1		PLUNGER BEARING N15627 (40342)		EA	1									126	22

(1) SMR CODE	(2) FEDERAL STOCK NUMBER	(3) DESCRIPTION REF NUMBER & MFR CODE	USABLE ON CODE	(4) UNIT OF MEAS	(5) QTY INC IN UNIT	(6) 30-DAY GS MAINT ALLOWANCE (a) 1-20	(b) 21-50	(c) 51-100	(7) 30-DAY GS MAINT ALLOWANCE (a) 1-20	(b) 21-50	(c) 51-100	(8) 1-YR ALW PER 100 EQUIP CNTGY	(9) DEPOT MAINT ALW PER 100 EQUIP	(10) ILLUSTRATION (a) FIG. NO.	(b) ITEM NO.
X1		SPACER 4X2454 (40342)		EA	V									126	23
X1		RING 51X402 (40342)		EA	1									126	24
X1		CUP N15644B (40342)		EA	1									126	25
X1		SHIM 4X2462 (40342)		EA	V									126	26
X1		SPRING N15643 (40342)		EA	1									126	27
X1		SHIM 4X2453 (40342)		EA	V									126	28
X1		PACKING N11728N (40342) (PART OF KIT, FSN 2530-728-7470)		EA	1									126	29
X1		PISTON N20816C (40342)		EA	1									126	30
X1		PACKING N12571BR (40342) (PART OF KIT, FSN 2530-728-7470)		EA	1									126	31
X1		SPRING N15622 (40342) (PART OF KIT, FSN 2530-728-7470)		EA	1									126	32
X1		BODY N20813A (40342)		EA	1									126	33
X1		COVER 200610A (40342)		EA	1									126	34
X1		PACKING N11728DV (40342) (PART OF KIT, FSN 2530-728-7470)		EA	2									126	35
X1		NUT 2X5515 (40342)		EA	1									126	36
X1		DISC ASSEMBLY N15617 (40342) (PART OF KIT, FSN 2530-728-7470)		EA	1									126	37
X1		VALVE N15621 (40342) (PART OF KIT, FSN 2530-728-7470)		EA	1									126	38
X1		SPRING N15620 (40342) (PART OF KIT, FSN 2530-728-7470)		EA	1									126	39
X1		CAGE 200009A (40342)		EA	1									126	40
P O		NUT, PLAIN, HEXAGON: BRAKE VALVE MTG, 5/16-24 THD SIZE 4202 (23382)		EA	3	*	*	*	*	*	*	*	*	127	1
P O		WASHER, LOCK: BRAKE VALVE MTG, 5/16 IN. 4318 (23382)		EA	3	*	*	*	*	*	*	*	*	127	2
P O	5306-225-9089	BOLT, MACHINE: BRAKE VALVE MTG, 5/16-24 X 1 IN. LG MS90726-34 (96906)		EA	3	*	*	*	*	*	*	*	*	127	3
P O		VALVE ASSEMBLY, BRAKE 280037 (06853)		EA	1	*	*	*	*	*	*	*	*	127	

(1) SMR CODE	(2) FEDERAL STOCK NUMBER	(3) DESCRIPTION REF NUMBER & MFR CODE	USABLE ON CODE	(4) UNIT OF MEAS	(5) QTY INC IN UNIT	(6) 30-DAY OS MAINT ALLOWANCE (a) 1-20	(b) 21-50	(c) 51-100	(7) 30-DAY GS MAINT ALLOWANCE (a) 1-20	(b) 21-50	(c) 51-100	(8) 1-YR ALW PER 100 EQUIP CNTGY	(9) DEPOT MAINT ALW PER 100 EQUIP	(10) ILLUSTRATION (a) FIG. NO.	(b) ITEM NO.
X20		TREADLE AND MOUNTING PLATE ASSEMBLY 280038 (06853)		EA	1									127	4
P O		PIN, COTTER: TREADLE MTG 210067 (06853)		EA	1	*	*	*	*	*	*	*	*	127	5
X1		PIN 238888 (06853)		EA	1									127	6
X20	2530-852-5955	TREADLE ASSEMBLY 226834 (06853)		EA	1									127	7
P O	5365-650-0979	PIN, COTTER: ROLLER SHAFT PIN 210492 (06853)		EA	1	*	*	*	*	*	*	*	*	127	8
X1		PIN 238474 (06853)		EA	1									127	9
X1		ROLLER 236288 (06853)		EA	1									127	10
X1		TREADLE 226835 (06853)		EA	1									127	11
P O	2530-775-5723	BOOT, RUBBER: PLUNGER DUST COVER 236982 (06853)		EA	1	*	*	*	*	*	*	*	*	127	12
X1		PLUNGER 236981 (06853)		EA	1									127	13
X20		BUTTON, STOP 236980 (06853)		EA	1									127	14
P O	5306-712-3285	BOLT, MACHINE: PLATE MTG, 5/16-18 X 3/4 IN. LG 202979 (06853)		EA	3	*	*	*	*	*	*	*	*	127	15
P O	5310 959-4679	WASHER, LOCK: PLATE MTG, 5/16 IN. MS35340-45 (96906)		EA	3	*	*	*	*	*	*	*	*	127	16
X1		PLATE 236979 (06853)		EA	1									127	17
P O		VALVE, BASIC 279750 (06853)		EA	1	*	*	*	*	*	*	*	*	127	18
X1		RETAINER 239668 (06853)		EA	1									127	19
P O	5330-085-3494	PACKING, PREFORMED: PISTON 239643 (06853)		EA	1	*	*	*	*	*	*	*	*	127	20
P O		PISTON ASSEMBLY 279756 (06853)		EA	1	*	*	*	*	*	*	*	*	127	21
P O		SPRING, RETURN: PISTON 244453 (06853)		EA	1	*	*	*	*	*	*	*	*	127	22
P O		BOLT, MACHINE: COVER MTG, 5/16-18 X 7/8 IN. LG 203414 (06853)		EA	4	*	*	*	*	*	*	*	*	127	2
P O	5310-085-3891	WASHER, LOCK: COVER MTG, 5/16 IN. 237648 (06853)		EA	4	*	*	*	*	*	*	*	*	127	2
P O		PACKING, PREFORMED: COVER 244446 (06853)		EA	1	*	*	*	*	*	*	*	*	127	2
P O	5340-282-5312	RING, RETAINING: DIAPHRAGM N5000-162 (79136)		EA	1	*	*	*	*	*	*	*	*	127	2
P O		SCREW, MACHINE: DIAPHRAGM, NO. 10-24 X 1/4 IN. LG 242228 (06853)		EA	1	*	*	*	*	*	*	*	*	127	2
X1		WASHER 239943 (06853)		EA	1									127	2
P O		DIAPHRAGM, VENT 246374 (06853)		EA	1	*	*	*	*	*	*	*	*	127	2
X1		SEAT 246372 (06853)		EA	1									127	2

(1) SMR CODE	(2) FEDERAL STOCK NUMBER	(3) DESCRIPTION REF NUMBER & MFR CODE	USABLE ON CODE	(4) UNIT OF MEAS	(5) QTY INC IN UNIT	(6) 30-DAY OS MAINT ALLOWANCE (a) 1-20	(b) 21-50	(c) 51-100	(7) 30-DAY GS MAINT ALLOWANCE (a) 1-20	(b) 21-50	(c) 51-100	(8) 1-YR ALW PER 100 EQUIP CNTGY	(9) DEPOT MAINT ALW PER 100 EQUIP	(10) ILLUSTRATION (a) FIG. NO.	(b) ITEM NO.
P O		PACKING, PREFORMED: LOWER VALVE 239219 (06853)		EA	1	*	*	*	*	*	*	*	*	127	31
X20		VALVE ASSEMBLY: LOWER 279755 (06853)		EA	1									127	32
P O	5365-298-6563	RING, RETAINING 5100-62 (79136)		EA	1	*	*	*	*	*	*	*	*	127	33
X1		GUIDE 244450 (06853)		EA	1									127	34
P O	5330-883-2799	PACKING, PREFORMED: PISTON GUIDE 239136 (06853)		EA	1	*	*	*	*	*	*	*	*	127	35
P O		SPRING, HELICAL: VALVE 244449 (06853)		EA	1	*	*	*	*	*	*	*	*	127	36
X1		RETAINER 244436 (06853)		EA	1									127	37
P O		VALVE, RUBBER 244448 (06853)		EA	1	*	*	*	*	*	*	*	*	127	38
X1		BODY 244447 (06853)		EA	1									127	39
X1		COVER 244445 (06853)		EA	1									127	40
P O		SPRING, RETURN: PISTON 244444 (06853)		EA	1	*	*	*	*	*	*	*	*	127	41
P O	5330-085-3494	PACKING, PREFORMED: PISTON 239643 (06853)		EA	1	*	*	*	*	*	*	*	*	127	42
P O	5330-141-3553	PACKING, PREFORMED: PISTON SHAFT 214745 (06853)		EA	1	*	*	*	*	*	*	*	*	127	43
X1		PISTON 244441 (06853)		EA	1									127	44
P O	5330-494-2497	PACKING, PREFORMED: OUTER PISTON 243973 (06853)		EA	1	*	*	*	*	*	*	*	*	127	45
X1		PISTON 244442 (06853)		EA	1									127	46
P O	5365-252-4746	RING, RETAINING: UPPER VALVE N5000-150 (79136)		EA	1	*	*	*	*	*	*	*	*	127	47
P O		PACKING, PREFORMED: UPPER VALVE 239219 (06853)		EA	1	*	*	*	*	*	*	*	*	127	48
X20		VALVE ASSEMBLY: UPPER 279754 (06853)		EA	1									127	49
P O	5340-282-7125	RING, RETAINING: VALVE 5100-40 (79136)		EA	1	*	*	*	*	*	*	*	*	127	50
X1		RETAINER 244439 (06853)		EA	1									127	51
P O	5330-311-9234	PACKING, PREFORMED: RETAINER 234045 (06853)		EA	1	*	*	*	*	*	*	*	*	127	52
X1		WASHER 244438 (06853)		EA	1									127	53
P O		SPRING, VALVE 244437 (06853)		EA	1	*	*	*	*	*	*	*	*	127	54
X1		RETAINER 244435 (06853)		EA	1									127	55
P O		VALVE, RUBBER 244434 (06853)		EA	1	*	*	*	*	*	*	*	*	127	56
X1		BODY 244443 (06853)		EA	1									127	57

(1) SMR CODE	(2) FEDERAL STOCK NUMBER	(3) DESCRIPTION REF NUMBER & MFR CODE	USABLE ON CODE	(4) UNIT OF MEAS	(5) QTY INC IN UNIT	(6) 30-DAY DS MAINT ALLOWANCE (a) 1-20	(b) 21-50	(c) 51-100	(7) 30-DAY GS MAINT ALLOWANCE (a) 1-20	(b) 21-50	(c) 51-100	(8) 1-YR ALW PER 100 EQUIP CNTGY	(9) DEPOT MAINT ALW PER 100 EQUIP	(10) ILLUSTRATION (a) FIG. NO.	(b) ITEM NO.
X1		BODY 244432 (06853)		EA	1									127	58
P F R		POWER CLUSTER ASSEMBLY AF53999 (63477)		EA	1	*	*	*	*	*	*	*	*	128	
P F	5310-531-1194	NUT, PLAIN, HEXAGON: PLATE MTG, 3/8-24 THD SIZE		EA	4	*	*	*	*	*	*	*	*	128	1
P F	5310-680 7297	WASHER, LOCK: PLATE MTG, 3/8 IN.		EA	4	*	*	*	*	*	*	*	*	128	2
P F	5305-269-2805	SCREW, CAP, HEXAGON HEAD: PLATE MTG, 3/8-24 X 1 1/4 IN. LG		EA	4	*	*	*	*	*	*	*	*	128	3
P F		SCREW, CAP, HEXAGON HEAD: CYLINDER MTG, 7/16-20 X 1 3/8 IN. LG 90-10629-100 (63477)		EA	3	*	*	*	*	*	*	*	*	128	4
P F		WASHER, LOCK: CYLINDER MTG, 7/16 IN. 90-10332-200 (63477)		EA	3	*	*	*	*	*	*	*	*	128	5
X2F		PLATE ASSEMBLY, UNIT MTG AD1514 (63477)		EA	1									128	6
X2F		SPACER: MTG PLATE AC2191 (63477)		EA	1									128	7
P F		SCREW, CAP, HEXAGON HEAD: CYLINDER MTG, 7/16-20 X 1 3/8 IN. 90-10629-100 (63477)		EA	2	*	*	*	*	*	*	*	*	128	8
P F		WASHER, LOCK: CYLINDER MTG, 3/8 IN. 90-10332-100 (63477)		EA	2	*	*	*	*	*	*	*	*	128	9
P F	2530-495-8565	INDICATOR ASSEMBLY, STROKE AC2149 (63477)		EA	1	*	*	*	*	*	*	*	*	128	10
P F		SCREW, CAP, HEXAGON HEAD: AIR CYLINDER MTG, 3/8-16 X 1 IN. LG 90-17983-900 (63477)		EA	3	*	*	*	*	*	*	*	*	128	11
P F		WASHER, LOCK: AIR CYLINDER MTG, 3/8 IN. 90-10332-100 (63477)		EA	4	*	*	*	*	*	*	*	*	128	12
X2F		BRACKET, MOUNTING AE1116 (63477)		EA	1									128	13
P F	2530-374-2197	CYLINDER ASSEMBLY, AIR AE836 (63477)		EA	1	*	*	*	*	*	*	*	*	128	14
P F		SCREW, ASSEMBLED WASHER: AIR CYLINDER SHELL MTG, 1/4-20 X 5/8 IN. LG 99-90787-000 (63477)		EA	8	*	*	*	*	*	*	*	*	128	15
X1		CYLINDER SHELL AD1513 (63477)		EA	1									128	16
P F		BUSHING, PIPE: 3/8 X 1/4 IN. NPT 90-14404-300 (63477)		EA	1	*	*	*	*	*	*	*	*	128	17
X1		ROD AND PISTON ASSEMBLY AC2832 (63477)		EA	1									128	18
X1		PISTON CUP AND SPRING ASSEMBLY AD1777 (63477)		EA	1									128	19
X1		WIPER, PISTON AC2838 (63477)		EA	1									128	20
P F	2530-514-2722	SPRING, HELICAL, COMPRESSION: PISTON AD1920 (63477)		EA	1	*	*	*	*	*	*	*	*	128	21
X1		BOOT, PROTECTIVE AC2034 (63477)		EA	1									128	22
X2F		HEAD ASSEMBLY, CYLINDER AC2036 (63477)		EA	1									128	23

(1) SMR CODE	(2) FEDERAL STOCK NUMBER	(3) DESCRIPTION REF NUMBER & MFR CODE	USABLE ON CODE	(4) UNIT OF MEAS	(5) QTY INC IN UNIT	(6) 30-DAY OS MAINT ALLOWANCE (a) 1-20	(b) 21-50	(c) 51-100	(7) 30-DAY GS MAINT ALLOWANCE (a) 1-20	(b) 21-50	(c) 51-100	(8) 1-YR ALW PER 100 EQUIP CNTGY	(9) DEPOT MAINT ALW PER 100 EQUIP	(10) ILLUSTRATION (a) FIG. NO.	(b) ITEM NO.
P F	4730-614-0205	STRAINER ELEMENT AC2009 (63477)		EA	2	*	*	*	*	*	*	*	*	128	24
P F	2530-133-9969	FILTER, CHAMBER AC43887 (63477)		EA	1	*	*	*	*	*	*	*	*	128	25
P F	2530-133-9968	RETAINER, SCREEN AC43886 (63477)		EA	1	*	*	*	*	*	*	*	*	128	26
P F		CYLINDER ASSEMBLY, HYDRAULIC FF35621 (63477)		EA	1	*	*	*	*	*	*	*	*	128	27
P O	2530-862-6822	CAP, FILLER FC16500 (63477)		EA	1	*	*	*	*	*	*	*	*	128	28
P O	5330-291-6658	WASHER, NONMETALLIC: CAP FC6019 (63477)		EA	1	*	*	*	*	*	*	*	*	128	29
P O	2530-274-4510	BLEEDER VALVE, HYDRAULIC FC6858 (63477)		EA	1	*	*	*	*	*	*	*	*	128	30
X1		RING, RETAINING: HYDRAULIC CYLINDER FC6435 (63477)		EA	1									128	31
X2F	5310-262-4823	WASHER, FLAT: PISTON STOP FC6434 (63477)		EA	1									128	32
X1		PISTON ASSEMBLY FC35201 (63477)		EA	1									128	33
X1		CUP, PISTON FD8021 (63477)		EA	1									128	34
P F		CUP, PRIMARY FD8020 (63477)		EA	1	*	*	*	*	*	*	*	*	128	35
P F	5340-447-9003	SPRING AND RETAINER ASSEMBLY FC6431 (63477)		EA	1	*	*	*	*	*	*	*	*	128	36
P F	5330-353-2901	PACKING, PREFORMED: CYLINDER SEAL AC2196 (63477)		EA	1	*	*	*	*	*	*	*	*	128	37
X2F		BODY, CYLINDER FF1701 (63477)		EA	1									128	38
P F		PLUG, MACHINE, HEXAGON HEAD: HYDRAULIC CYLINDER, 1/2-20 X 7/16 IN. LG		EA	2	*	*	*	*	*	*	*	*	128	39
X2F		WASHER, COPPER: PLUG, 17/32 ID X 11/16 OD X 1/32 IN. THK		EA	3									128	40
X2F		BOLT, FLUID PASSAGE: CYLINDER		EA	1									128	41
X2F		WASHER, COPPER: BOLT MTG, 17/32 ID X 11/16 OD X 1/32 IN. THK		EA	1									128	42
X2F		FITTING, TEE: SPECIAL, DRILLED BODY, FLUID OUTLET		EA	1									128	43
X2F		WASHER, COPPER: FITTING MTG, 19/32 ID X 11/16 OD X 1/32 IN. THK		EA	1									128	44
X2F		PLUG, TUBE FITTING: TEE FITTING, 7/16-24 THD SIZE		EA	1									128	45
		GROUP 20 - STEERING CONTROLS													
P O		CLAMP, BAND 55083-212-2 (98625)		EA	2	*	*	*	*	*	*	*	*	129	1
P O	4720 930 5388	HOSE, SUCTION 100R4 (81343)		FT	V	*	*	*	*	*	*	*	*	129	2
P O		FITTING, HOSE 114050 (23382)		EA	1	*	*	*	*	*	*	*	*	129	3
P O		FITTING, HOSE OMC2024-90 (99103)		EA	1	*	*	*	*	*	*	*	*	129	4

(1) SMR CODE	(2) FEDERAL STOCK NUMBER	(3) DESCRIPTION REF NUMBER & MFR CODE	USABLE ON CODE	(4) UNIT OF MEAS	(5) QTY INC IN UNIT	(6) 30-DAY DS MAINT ALLOWANCE (a) 1-20	(b) 21-50	(c) 51-100	(7) 30-DAY GS MAINT ALLOWANCE (a) 1-20	(b) 21-50	(c) 51-100	(8) 1-YR ALW PER 100 EQUIP CNTGY	(9) DEPOT MAINT ALW PER 100 EQUIP	(10) ILLUSTRATIO (a) FIG. NO.
P O		HOSE ASSEMBLY 138125 (23382)		EA	1	*	*	*	*	*	*	*	*	129
P O		TUBE ASSEMBLY 114052 (23382)		EA	1	*	*	*	*	*	*	*	*	129
P O		CONNECTOR, TUBE 10615318 (23382)		EA	1	*	*	*	*	*	*	*	*	129
P O		HOSE ASSEMBLY 134171 (23382)		EA	3	*	*	*	*	*	*	*	*	129
P O	4730 995-1230	CAP, TUBE 8FNTX (45681)		EA	1	*	*	*	*	*	*	*	*	129
P O		TEE, TUBE 8S6XS (45681)		EA	1	*	*	*	*	*	*	*	*	129
P O		ADAPTER, REDUCER 10100574 (23382)		EA	1	*	*	*	*	*	*	*	*	129
P O		TUBE, COPPER: 1/2 IN. OD X 10 FT LG 197696 (23382)		EA	1	*	*	*	*	*	*	*	*	129
P O		UNION, TUBE 5HTX (45681)		EA	2	*	*	*	*	*	*	*	*	129
P O		NUT, TUBE 10BTX (45681)		EA	2	*	*	*	*	*	*	*	*	129
P O	4730-895-2975	SLEEVE, TUBE 10TXCS (45681)		EA	2	*	*	*	*	*	*	*	*	129
P O	4730-818-2467	ELBOW, TUBE 8C6XS (45681)		EA	2	*	*	*	*	*	*	*	*	129
P O		HOSE ASSEMBLY 138125 (23382)		EA	1	*	*	*	*	*	*	*	*	129
P O		TUBE, COPPER: 5/8 IN. OD X 8 FT LG 197697 (23382)		FT	V	*	*	*	*	*	*	*	*	129
P O		ADAPTER, REDUCER 8-10JMS (70434)		EA	1	*	*	*	*	*	*	*	*	129
P O	4730-722-4891	NUT, TUBE COUPLING AN818-8 (88044)		EA	2	*	*	*	*	*	*	*	*	129
P O	4730 856-8296	SLEEVE, FLARED, TUBE FITTING MS20819-8B (96906)		EA	2	*	*	*	*	*	*	*	*	129
P O		TUBE ASSEMBLY: COPPER, 5/8 IN. 134169 (23382)		EA	1	*	*	*	*	*	*	*	*	129
P O		UNION, TUBE 10HTX (45681)		EA	1	*	*	*	*	*	*	*	*	129
P O		HOSE ASSEMBLY 134174 (23382)		EA	5	*	*	*	*	*	*	*	*	129
P O		ADAPTER, REDUCER 5-8JMS (70434)		EA	4	*	*	*	*	*	*	*	*	129
P O	4730-933-0742	TEE, TUBE 8S50XS (45681)		EA	2	*	*	*	*	*	*	*	*	129
P O		HOSE ASSEMBLY 134173 (23382)		EA	2	*	*	*	*	*	*	*	*	129
P O		TUBE ASSEMBLY 134172 (23382)		EA	2	*	*	*	*	*	*	*	*	129
P O		TUBE, COPPER: 5/16 IN. OD X 19 FT LG 197693 (23382)		EA	1	*	*	*	*	*	*	*	*	129
P O		ADAPTER, REDUCER 0503-6-8 (45681)		EA	4	*	*	*	*	*	*	*	*	129
P O	4730-618-8589	NUT, TUBE COUPLING 5BTX (45681)		EA	4	*	*	*	*	*	*	*	*	129

(1) SMR CODE	(2) FEDERAL STOCK NUMBER	(3) DESCRIPTION REF NUMBER & MFR CODE	USABLE ON CODE	(4) UNIT OF MEAS	(5) QTY INC IN UNIT	(6) 30-DAY OS MAINT ALLOWANCE (a) 1-20	(b) 21-50	(c) 51-100	(7) 30-DAY GS MAINT ALLOWANCE (a) 1-20	(b) 21-50	(c) 51-100	(8) 1-YR ALW PER 100 EQUIP CNTGY	(9) DEPOT MAINT ALW PER 100 EQUIP	(10) ILLUSTRATION (a) FIG. NO.	(b) ITEM NO.
P O	4730-684-1416	SLEEVE, FLARED MS20819-5B (96906)		EA	4	*	*	*	*	*	*	*	*	129	32
P O	4730-359-4731	UNION, TUBE 8HTXS (45681)		EA	2	*	*	*	*	*	*	*	*	129	33
P O		HOSE ASSEMBLY 134175 (23382)		EA	1	*	*	*	*	*	*	*	*	129	34
P O		TUBE ASSEMBLY 134176 (23382)		EA	1	*	*	*	*	*	*	*	*	129	35
P O	4730-917-4794	ELBOW, PIPE TO TUBE 8C50XS (45681)		EA	7	*	*	*	*	*	*	*	*	129	36
P O		ELBOW, BULKHEAD 8WETX (45681)		EA	1	*	*	*	*	*	*	*	*	129	37
P O	4730-853-1182	ADAPTER, STRAIGHT, PIPE TO HOSE 8F50XS (45681)		EA	1	*	*	*	*	*	*	*	*	129	38
P O		PACKING, PREFORMED 10615343 (23382)		EA	1	*	*	*	*	*	*	*	*	129	39
P O	5305-068-0511	SCREW, CAP, HEXAGON HEAD: PUMP MTG, 3/8-16 X 1 1/4 IN. LG MS90728-72 (96906)		EA	2	*	*	*	*	*	*	*	*	130	1
P O	5310-261-7340	WASHER, LOCK: PUMP MTG, 3/8 IN. 103321 (72582)		EA	2	*	*	*	*	*	*	*	*	130	2
P O	5330-695-2157	GASKET: PUMP MTG 5188755 (72582)		EA	1	*	*	*	*	*	*	*	*	130	3
P O R		PUMP ASSEMBLY: HYDRAULIC, POWER STEERING V20FIS11S1C8G10 (62983)		EA	1	*	*	*	*	*	*	*	*	130	
X20		SPACER, PUMP GEAR 334709 (23382)		EA	1									130	4
P O	5315-264-3102	KEY, MACHINE: PUMP DRIVE, 3/16 X 3/16 X 1 5/8 IN. LG SCD16871 (80063)		EA	1	*	*	*	*	*	*	*	*	130	5
P F		SCREW, CAP, HEXAGON HEAD: PUMP COVER, 1/2-13 X 4 1/4 IN. LG 96168 (62983)		EA	4	*	*	*	*	*	*	*	*	130	6
P F	5340-896-1513	SPRING, HELICAL, COMPRESSION 275672 (63977)		EA	1	*	*	*	*	*	*	*	*	130	7
P F	3930-499-9837	PLUG, PIPE: VALVE 7077 (63977)		EA	2	*	*	*	*	*	*	*	*	130	8
P F	3930-755-0429	SPRING, HELICAL, COMPRESSION: VALVE 239766 (62983)		EA	1	*	*	*	*	*	*	*	*	130	9
P F	4820-034-1690	VALVE ASSEMBLY, CONTROL 232798 (63977)		EA	1	*	*	*	*	*	*	*	*	130	10
P F	5340-019-4207	RING, RETAINING 155023 (62983)		EA	1	*	*	*	*	*	*	*	*	130	11
X2F		COVER, CONTROL 306919 (62983)		EA	1									130	12
P F		PRESSURE PLATE ASSEMBLY 359287 (62983)		EA	1	*	*	*	*	*	*	*	*	130	13
P F	5365-182-6714	BUSHING, SLEEVE 280267 (63977)		EA	1	*	*	*	*	*	*	*	*	130	14
X1		RING, ROTOR 131486 (62983)		EA	1									130	15
X1		PACKING, PREFORMED: RING SEAL 154090 (62983)		EA	2									130	16
X1		VANE KIT 923478 (62983)		EA	1									130	17

(1) SMR CODE	(2) FEDERAL STOCK NUMBER	(3) DESCRIPTION REF NUMBER & MFR CODE	USABLE ON CODE	(4) UNIT OF MEAS	(5) QTY INC IN UNIT	(6) 30-DAY OS MAINT ALLOWANCE (a) 1-20	(b) 21-50	(c) 51-100	(7) 30-DAY GS MAINT ALLOWANCE (a) 1-20	(b) 21-50	(c) 51-100	(8) 1-YR ALW PER 100 EQUIP CNTGY	(9) DEPOT MAINT ALW PER 100 EQUIP	(a) FIG NO
X1		ROTOR, PUMP 358332 (62983)		EA	1									13
P F	5340-359 4042	RING, RETAINING 109975 (62983)		EA	1	*	*	*	*	*	*	*	*	13
P F	5340-805-6002	RING, RETAINING MS16624-78 (96906)		EA	1	*	*	*	*	*	*	*	*	13
P F	3110-109-1123	BEARING, BALL, ANNULAR 98574 (63977)		EA	1	*	*	*	*	*	*	*	*	13
P F		SHAFT, PUMP 280372 (62983)		EA	1	*	*	*	*	*	*	*	*	13
X1		SEAL, SHAFT 229235 (62983)		EA	1									13
X2F		PIN, STRAIGHT, HEADLESS 16662 (62983)		EA	2									13
X1		BODY, PUMP 294266 (62983)		EA	1									13
P O	5305-069-5572	SCREW, CAP, HEXAGON HEAD: HYDRAULIC PUMP ADAPTER, 7/16-14 X 7/8 IN. LG 179857 (72582)		EA	1	*	*	*	*	*	*	*	*	13
P O	5310-595-6852	WASHER, COPPER: HYDRAULIC PUMP ADAPTER, 7/16 IN. 5150568 (72582)		EA	1	*	*	*	*	*	*	*	*	13
P O	5305-044-4153	SCREW, CAP, HEXAGON HEAD: HYDRAULIC PUMP ADAPTER, 1/2-13 X 1 IN. LG 122408 (72582)		EA	4	*	*	*	*	*	*	*	*	13
P O	5310-584-5272	WASHER, LOCK: HYDRAULIC PUMP ADAPTER, 1/2 IN. 103323 (72582)		EA	4	*	*	*	*	*	*	*	*	13
X20		ADAPTER, PUMP 51331332 (72582)		EA	1									13
P O	2815-620 7359	GASKET: HYDRAULIC PUMP ADAPTER 5117061 (72582)		EA	1	*	*	*	*	*	*	*	*	13
X20		SPROCKET, DRIVE 5131313 (72582)		EA	1									13
X20		COUPLING, DRIVE 5143616 (72582)		EA	1									13
P O	5306-089-6920	BOLT, SHOULDERED 5125491 (72582)		EA	5	*	*	*	*	*	*	*	*	13
P O	2815-710-1081	GEAR, INTERNAL 5168688 (72582)		EA	1	*	*	*	*	*	*	*	*	13
X20		SPACER, GEAR 5177026 (72582)		EA	1									13
P O R		VALVE ASSEMBLY, CONTROL 152-32738-44 (64294)		EA	1	*	*	*	*	*	*	*	*	13
X20		PIN, COTTER 29660-1 (64294)		EA	1									13
P O		WASHER, FLAT: HANDLE, 3/8 IN. 29602-155 (64294)		EA	1	*	*	*	*	*	*	*	*	13
X20		PIN, CLEVIS: HANDLE 151-22608 (64294)		EA	1									1
X20		HANDLE, VALVE 151-32742 (64294)		EA	1									1
P O	5305-129-9428	SCREW, SPECIAL: BRACKET MTG, 1/4-20 X 5/8 IN. LG 29556-1 (64294)		EA	4	*	*	*	*	*	*	*	*	1
X20		BRACKET, VALVE 151-32741 (64294)		EA	1									1

(1) MR DE	(2) FEDERAL STOCK NUMBER	(3) DESCRIPTION REF NUMBER & MFR CODE	USABLE ON CODE	(4) UNIT OF MEAS	(5) QTY INC IN UNIT	(6) 30-DAY DS MAINT ALLOWANCE (a) 1-20	(b) 21-50	(c) 51-100	(7) 30-DAY GS MAINT ALLOWANCE (a) 1-20	(b) 21-50	(c) 51-100	(8) 1-YR ALW PER 100 EQUIP CNTGY	(9) DEPOT MAINT ALW PER 100 EQUIP	(10) ILLUS-TRATION (a) FIG. NO.	(b) ITEM NO.
F	5305-129-9428	SCREW, SPECIAL: CAP MTG, 1/4-20 X 5/8 IN. LG 29556-1 (64294)		EA	2	*	*	*	*	*	*	*	*	131	7
F		CAP, SPRING 151-21439 (64294)		EA	1									131	8
F	5330-130-7779	PACKING, PREFORMED: SPOOL 29771-116 (64294)		EA	2	*	*	*	*	*	*	*	*	131	9
F		WASHER, C: VALVE SPOOL 151-32743 (64294)		EA	2									131	10
F	5340-129-9416	SPRING, RETURN 151-25059 (64294)		EA	1	*	*	*	*	*	*	*	*	131	11
		SPOOL 151-32740 (64294)		EA	1									131	12
F		CARTRIDGE ASSEMBLY 152-33033 (64294)		EA	1	*	*	*	*	*	*	*	*	131	13
		CAP 151-23413 (64294)		EA	1									131	14
F		GASKET: VALVE 151-24829 (64294)		EA	2	*	*	*	*	*	*	*	*	131	15
F		NUT, PLAIN, HEXAGON: 1/2-20 THD SIZE 151-20324-2 (64294)		EA	1	*	*	*	*	*	*	*	*	131	16
F		GASKET: VALVE 151-24829 (64294)		EA	1	*	*	*	*	*	*	*	*	131	17
F		SETSCREW: CONTROL VALVE, 1/2-20 X 1 3/8 IN. LG 151-24429 (64294)		EA	1	*	*	*	*	*	*	*	*	131	18
F		SPACER, VALVE 151-33038 (64294)		EA	1									131	19
		PLUG 151-33039 (64294)		EA	1									131	20
		SPACER 151-33037 (64294)		EA	1									131	21
		SPRING 151-33036 (64294)		EA	1									131	22
		BALL 151-33035 (64294)		EA	1									131	23
		SLEEVE 151-33034 (64294)		EA	1									131	24
		RETAINER 29692-018 (64294)		EA	1									131	25
F		PACKING, PREFORMED 29791-018 (64294)		EA	1	*	*	*	*	*	*	*	*	131	26
		BODY 151-32739-9 (64294)		EA	1									131	27
0	5315-059-0494	PIN, COTTER: BALL STUD AND SOCKET MTG, 1/8 X 2 1/2 IN. LG		EA	2	*	*	*	*	*	*	*	*	132	1
0		BALL, STUD AND SOCKET ASSEMBLY: FRONT CYLINDER 31208 (94431)		EA	2	*	*	*	*	*	*	*	*	132	2
0 R		CYLINDER, HYDRAULIC: FRONT STEERING 40101 (94431)		EA	2	*	*	*	*	*	*	*	*	132	
0	4730-050-4205	FITTING, LUBRICATION: 1/8 IN. STRAIGHT 163781 (95879)		EA	2	*	*	*	*	*	*	*	*	132	3
0	5315-899-4116	PIN, COTTER: PLUG RETAINING, 3/16 X 3 IN. LG 3-16-3 (94431)		EA	2	*	*	*	*	*	*	*	*	132	4

(1) SMR CODE	(2) FEDERAL STOCK NUMBER	(3) DESCRIPTION REF NUMBER & MFR CODE USABLE ON CODE	(4) UNIT OF MEAS	(5) QTY INC IN UNIT	(6) 30-DAY DS MAINT ALLOWANCE (a) 1-20	(b) 21-50	(c) 51-100	(7) 30-DAY GS MAINT ALLOWANCE (a) 1-20	(b) 21-50	(c) 51-100	(8) 1-YR ALW PER 100 EQUIP CNTGY	(9) DEPOT MAINT ALW PER 100 EQUIP	(10) ILLUSTRATION (a) FIG. NO.	(b) ITEM NO
P F		PLUG, SPECIAL 234 (94431)	EA	2	*	*	*	*	*	*	*	*	132	
P F	2530-320-1827	SPRING, HELICAL, COMPRESSION: BALL SEAT 233 (94431)	EA	2	*	*	*	*	*	*	*	*	132	
P F	2530-352-6632	SEAT, BALL, CONTROL 122 (94431)	EA	4	*	*	*	*	*	*	*	*	132	
P F		SCREW, CAP, SOCKET HEAD: END CAP MOUNTING 10-32 (94431)	EA	8	*	*	*	*	*	*	*	*	132	
P F		WASHER, LOCK: END CAP MTG 10 (94431)	EA	8	*	*	*	*	*	*	*	*	132	
XI		END CAP 40114 (94431)	EA	2									132	1
P F		WIPER, ROD 959-11 (45681)	EA	2	*	*	*	*	*	*	*	*	132	1
P F		RING, LOCK 40117 (94431)	EA	2	*	*	*	*	*	*	*	*	132	1
P F	5340-514-0554	RING, RETAINING RR175 (80756)	EA	2	*	*	*	*	*	*	*	*	132	1
XI		WASHER 40118 (94431)	EA	2									132	1
P F		SEAL, PLAIN 31201125 (45681)	EA	2	*	*	*	*	*	*	*	*	132	1
P F	5330-993-0734	PACKING, PREFORMED 2-228 (45681)	EA	2	*	*	*	*	*	*	*	*	132	1
P F		RING, BACKUP 8-228 (94431)	EA	2	*	*	*	*	*	*	*	*	132	1
P F		HEAD, CYLINDER 40116 (94431)	EA	2	*	*	*	*	*	*	*	*	132	1
P F		NUT, SELF-LOCKING: ROD, 3/4-16 THD SIZE 3-4-16 (94431)	EA	2	*	*	*	*	*	*	*	*	132	1
P F		ROD, CYLINDER 40115 (94431)	EA	2	*	*	*	*	*	*	*	*	132	2
P F		SEAL, U-CUP 31266 (94431)	EA	4	*	*	*	*	*	*	*	*	132	2
P F	5340-687-3804	RING, RETAINING RS187 (80756)	EA	4	*	*	*	*	*	*	*	*	132	2
P F		PACKING, PREFORMED 31268 (94431)	EA	4	*	*	*	*	*	*	*	*	132	2
P F		FOLLOWER, PISTON 40113 (94431)	EA	4	*	*	*	*	*	*	*	*	132	2
P F		PISTON, HYDRAULIC CYLINDER 40112 (94431)	EA	2	*	*	*	*	*	*	*	*	132	2
XI		BODY 40110 (94431)	EA	2									132	2
P O	5315-059-0494	PIN, COTTER: BALL, STUD AND SOCKET MTG, 1/8 X 2 1/2 IN. LG	EA	1	*	*	*	*	*	*	*	*	133	
P O		BALL, STUD AND SOCKET ASSEMBLY: REAR CYLINDER 31208 (94431)	EA	1	*	*	*	*	*	*	*	*	133	
P O R		CYLINDER, POWER STEERING: REAR 38982 (94431)	EA	1	*	*	*	*	*	*	*	*	133	
P O		FITTING, LUBRICATION: 1/16 IN. STRAIGHT 5042 (36251)	EA	1	*	*	*	*	*	*	*	*	133	

(1) SMR CODE	(2) FEDERAL STOCK NUMBER	(3) DESCRIPTION REF NUMBER & MFR CODE	USABLE ON CODE	(4) UNIT OF MEAS	(5) QTY INC IN UNIT	(6) 30-DAY DS MAINT ALLOWANCE (a) 1-20	(b) 21-50	(c) 51-100	(7) 30-DAY GS MAINT ALLOWANCE (a) 1-20	(b) 21-50	(c) 51-100	(8) 1-YR ALW PER 100 EQUIP CNTGY	(9) DEPOT MAINT ALW PER 100 EQUIP	(10) ILLUSTRATION (a) FIG. NO.	(b) ITEM NO.
P O	5315-899-4116	PIN, COTTER: 3/16 X 3 IN. LG 3-16-3 (94431)		EA	1	*	*	*	*	*	*	*	*	133	4
X2F		PLUG, END 234 (94431)		EA	1									133	5
P F	2530-320-1827	SPRING, HELICAL, COMPRESSION: BALL SEAT 233 (94431)		EA	1	*	*	*	*	*	*	*	*	133	6
P F	2530-352-6632	SEAT, BALL, CONTROL 122 (94431)		EA	2	*	*	*	*	*	*	*	*	133	7
P F		BOLT, MACHINE: END CAP, 5/16-18 X 3/4 IN. LG 5-16-18-3-4 (94431)		EA	4	*	*	*	*	*	*	*	*	133	8
P F		WASHER, LOCK: END CAP, 5/16 IN. 5-16 (94431)		EA	4	*	*	*	*	*	*	*	*	133	9
X2F		CAP, END 39134 (94431)		EA	1									133	10
X1		SEAL 32662-18 (94431)		EA	1									133	11
X2F		RING, LOCK 39137 (94431)		EA	1									133	12
X1		SEAL 611-9 (72902)		EA	1									133	13
X1		RING, RETAINER: ROD PACKING 8-234N300-9 (03818)		EA	1									133	14
X1		PACKING, PREFORMED 32977 (94431)		EA	1									133	15
X2F		HEAD, FRONT 39132 (94431)		EA	1									133	16
P F		NUT, LOCK: ROD, 3/4-16 THD SIZE 32464 (94431)		EA	1	*	*	*	*	*	*	*	*	133	17
X1		U-CUP 31118 (94431)		EA	2									133	18
P F		RING, RETAINING 31117 (94431)		EA	2	*	*	*	*	*	*	*	*	133	19
X2F		FOLLOWER, PISTON 39135 (94431)		EA	2									133	20
X1		PACKING, PREFORMED 32116 (94431)		EA	2									133	21
X2F		PISTON, CYLINDER 39136 (94431)		EA	1									133	22
X2F		ROD, CYLINDER 39133 (94431)		EA	1									133	23
X1		BODY ASSEMBLY 39127 (94431)		EA	1									133	24
P O R		VALVE, POWER STEERING G2280 (94431)		EA	1	*	*	*	*	*	*	*	*	134	
P O		FITTING, LUBRICATION 5042 (36251)		EA	1	*	*	*	*	*	*	*	*	134	1
P O	5315-059-0187	PIN, COTTER: 1/8 IN. DIA, 3 IN. LG 1-8X3 (94431)		EA	1	*	*	*	*	*	*	*	*	134	2
X20		PLUG, END 2149 (94431)		EA	1									134	3
X2F		LOCK, PLUG 2109 (94431)		EA	1									134	4
P F		PLUG, BALL SOCKET 2150 (94431)		EA	1	*	*	*	*	*	*	*	*	134	5

(1) SMR CODE	(2) FEDERAL STOCK NUMBER	(3) DESCRIPTION REF NUMBER & MFR CODE	USABLE ON CODE	(4) UNIT OF MEAS	(5) QTY INC IN UNIT	(6) 30-DAY DS MAINT ALLOWANCE (a) 1-20	(b) 21-50	(c) 51-100	(7) 30-DAY GS MAINT ALLOWANCE (a) 1-20	(b) 21-50	(c) 51-100	(8) 1-YR ALW PER 100 EQUIP CNTGY	(9) DEPOT MAINT ALW PER 100 EQUIP	(10) ILLUSTRATION (a) FIG. NO.	(b) ITEM NO.
P F	2530-550-5826	SPRING, BALL SOCKET 147 (94431)		EA	1	*	*	*	*	*	*	*	*	134	6
P F		SEAT, BALL 2147 (94431)		EA	2	*	*	*	*	*	*	*	*	134	7
P O		BOOT, DUST 37336 (94431)		EA	1	*	*	*	*	*	*	*	*	134	8
P F		NUT, ROD: 1/2-20 THD SIZE 21FK820 (56878)		EA	1	*	*	*	*	*	*	*	*	134	9
P F		BEARING, BALL SOCKET 2148 (94431)		EA	1	*	*	*	*	*	*	*	*	134	10
P F		SOCKET, BALL 2152 (94431)		EA	1	*	*	*	*	*	*	*	*	134	11
P O		NUT, PLAIN, HEXAGON: CLAMP, 1/2-20 THD SIZE 1-2-20 (94431)		EA	1	*	*	*	*	*	*	*	*	134	12
P O	5310-834-7606	WASHER, LOCK: CLAMP, 1/2 IN. MS35340-48 (96906)		EA	1	*	*	*	*	*	*	*	*	134	13
P O		SCREW, CAP, HEXAGON HEAD: CLAMP, 1/2-20 X 2 3/4 IN. LG 1-2-20X2-3-4 (94431)		EA	1	*	*	*	*	*	*	*	*	134	14
X20		CLAMP, ADAPTER 2143 (94431)		EA	1									134	15
X2F		ADAPTER, VALVE 2155 (94431)		EA	1									134	16
P F		NUT, ROD: 1/2-20 THD SIZE 21FK820 (56878)		EA	1	*	*	*	*	*	*	*	*	134	17
P F		WASHER, ROD 2131 (94431)		EA	1	*	*	*	*	*	*	*	*	134	18
P F		PACKING, PREFORMED 32315 (94431)		EA	1	*	*	*	*	*	*	*	*	134	19
X1		RETAINER 2157A (94431)		EA	1									134	20
P F	5340-130-7798	SPRING, HELICAL, COMPRESSION 32093 (94431)		EA	1	*	*	*	*	*	*	*	*	134	21
X1		SPACER 36582 (94431)		EA	1									134	22
P F	5330-899-2762	PACKING, PREFORMED 2-113 (45681)		EA	1	*	*	*	*	*	*	*	*	134	23
P F		PACKING, PREFORMED 2-14N219-7 (45681)		EA	2	*	*	*	*	*	*	*	*	134	24
X1		PISTON 38905 (94431)		EA	1									134	25
P F		STUFFING BOX 2173 (94431)		EA	1	*	*	*	*	*	*	*	*	134	26
P F		PACKING, PREFORMED 32621 (94431)		EA	1	*	*	*	*	*	*	*	*	134	27
X1		BODY 39124 (94431)		EA	1									134	28
X1		HOUSING 39123 (94431)		EA	1									134	29
P O		DRAG LINK ASSEMBLY 88837 (23382)		EA	1	*	*	*	*	*	*	*	*	134	30
P O		FITTING, LUBRICATION: DRAG LINK, 1/8 NPT, 90 DEG MS15003-3 (96906)		EA	1	*	*	*	*	*	*	*	*	134	31

(1) SMR CODE	(2) FEDERAL STOCK NUMBER	(3) DESCRIPTION REF NUMBER & MFR CODE	USABLE ON CODE	(4) UNIT OF MEAS	(5) QTY INC IN UNIT	(6) 30-DAY DS MAINT ALLOWANCE (a) 1-20	(b) 21-50	(c) 51-100	(7) 30-DAY GS MAINT ALLOWANCE (a) 1-20	(b) 21-50	(c) 51-100	(8) 1-YR ALW PER 100 EQUIP CNTGY	(9) DEPOT MAINT ALW PER 100 EQUIP	(10) ILLUSTRATION (a) FIG. NO.	(b) ITEM NO.
P O	5315-059-0187	PIN, COTTER: PLUG, 1/8 IN. X 3 IN. LG 1-8x3 (94431)		EA	1	*	*	*	*	*	*	*	*	134	32
X1		PLUG 45ALS25HP23 (98349)		EA	1									134	33
P F		SPRING, HELICAL, COMPRESSION: DRAG LINK 45ALS24SP33 (98349)		EA	1	*	*	*	*	*	*	*	*	134	34
X1		BEARING 45ALS24HB38 (98349)		EA	2									134	35
X1		SEAT 45ALS24DE19 (98349)		EA	1									134	36
P F	5310-014-2247	NUT, PLAIN, HEXAGON: CLAMP MTG, 1/4-28 THD SIZE 4200 (23382)		EA	4	*	*	*	*	*	*	*	*	135	1
P F	5310-018-7241	WASHER, LOCK: CLAMP MTG, 1/4 IN. 4312 (23382)		EA	4	*	*	*	*	*	*	*	*	135	2
P F	5305-267-8953	SCREW, CAP, HEXAGON HEAD: CLAMP MTG, 1/4-28 X 1 IN. LG 4194 (23382)		EA	4	*	*	*	*	*	*	*	*	135	3
X2F		CLAMP, STEERING COLUMN 329397 (23382)		EA	2									135	4
P2F		COLUMN ASSEMBLY, STEERING UC24004 (73740)		EA	1	*	*	*	*	*	*	*	*	135	
P F		BUTTON, HORN 12497 (73740)		EA	1	*	*	*	*	*	*	*	*	135	5
P F	2590-696-0575	SPRING, DISC: HORN BUTTON 12082 (73740)		EA	1	*	*	*	*	*	*	*	*	135	6
X2F		SPACER, CONTACT CUP 23612 (73740)		EA	1									135	7
P F	2590-466-7403	LOCKWIRE, HORN BUTTON 12493 (73740)		EA	1	*	*	*	*	*	*	*	*	135	8
P F		NUT, WHEEL 34611 (73740)		EA	1	*	*	*	*	*	*	*	*	135	9
P F	2590-696-0576	CUP, CONTACT 12496 (73740)		EA	1	*	*	*	*	*	*	*	*	135	10
P F	5305-237-8028	SCREW, MACHINE: BRUSH MTG, NO. 8-32 X 3/16 IN. LG G420460 (73740)		EA	2	*	*	*	*	*	*	*	*	135	11
P F	5977-578-6495	BRUSH, ELECTRICAL CONTACT 032156 (73740)		EA	1	*	*	*	*	*	*	*	*	135	12
X2F		SPACER, BRUSH 034059 (73740)		EA	1									135	13
X2F		SPACER, PIPE: 1 1/8 OD X 5/8 IN. LG 477167 (73740)		EA	1									135	14
X2F		WASHER, FLAT: 0.906 ID X 2 OD X 0.125 IN. THK 028300 (73740)		EA	1									135	15
X2F	2530-359-1491	CUP, WHEEL SKIRT 029066 (73740)		EA	1									135	16
X1		BEARING 063983 (73740)		EA	1									135	17
P F	2530-297-6705	SPRING, HELICAL 401090 (73740)		EA	1	*	*	*	*	*	*	*	*	135	18
P F	2530-359-1823	RETAINER, STEERING 028093 (73740)		EA	2	*	*	*	*	*	*	*	*	135	19

(1) SMR CODE	(2) FEDERAL STOCK NUMBER	(3) DESCRIPTION REF NUMBER & MFR CODE	USABLE ON CODE	(4) UNIT OF MEAS	(5) QTY INC IN UNIT	(6) 30-DAY DS MAINT ALLOWANCE (a) 1-20	(b) 21-50	(c) 51-100	(7) 30-DAY GS MAINT ALLOWANCE (a) 1-20	(b) 21-50	(c) 51-100	(8) 1-YR ALW PER 100 EQUIP CNTGY	(9) DEPOT MAINT ALW PER 100 EQUIP	(10) ILLUSTRATIO (a) FIG. NO.	(b) IT N
P F	5305-012-1832	SCREW, MACHINE: NYLON CONTACT RING FFS92TYPE1STYLE1 (81348)		EA	1	*	*	*	*	*	*	*	*	135	2
P F	2530-786-0222	RING ASSEMBLY, CONTACT 063024 (73740)		EA	1	*	*	*	*	*	*	*	*	135	2
P F		CABLE ASSEMBLY 5DS00-1350 (73740)		EA	1	*	*	*	*	*	*	*	*	135	2
X2F		SHAFT ASSEMBLY 089154A1-1400 (73740)		EA	1									135	2
X2F		JACKET TUBE ASSEMBLY 095230A1-1056 (73740)		EA	1									135	2
X1		BEARING 063983 (73740)		EA	1									135	2
P F	2540-248-0426	INSULATOR, HORN CABLE 075001 (73740)		EA	1	*	*	*	*	*	*	*	*	135	2
P F		TERMINAL, FEMALE 032262 (73740)		EA	1	*	*	*	*	*	*	*	*	135	2
P F		UNIVERSAL JOINT ASSEMBLY 9020435233 (70960)		EA	1	*	*	*	*	*	*	*	*	135	2
X1		NUT NUHX6-24-3 (70960)		EA	2									135	2
X1		WASHER WALH6-3 (70960)		EA	2									135	3
X1		SCREW CSH6-24-11 (70960)		EA	2									135	3
X1		CLAMP L6NYS16-18 (70960)		EA	1									135	3
X1		CLAMP L6NYS14-17 (70960)		EA	1									135	3
X1		FITTING 1612B (70960) (PART OF KIT, FSN 2530-755-7336)		EA	2									135	3
X1		RING, RETAINING L6N6 (70960) (PART OF KIT, FSN 2530-755-7336)		EA	8									135	3
X1		BUSHING, SPIDER L6S2-5 (70960) (PART OF KIT, FSN 2530-755-7336)		EA	8									135	3
X1		WASHER, SEAL L6S3 (70960) (PART OF KIT, FSN 2530-755-7336)		EA	8									135	3
X1		SPIDER, U-JOINT L6S1-3 (70960) (PART OF KIT, FSN 2530-755-7336)		EA	2									135	3
X1		YOKE 9022735233 (70960)		EA	1									135	3
X1		CAP DCR22-1 (70960)		EA	1									135	2
X1		WASHER WAFR20-2 (70960)		EA	1									135	1
X1		FITTING 5042 (70960)		EA	1									135	
X1		SHAFT L6NYSM22-5 (70960)		EA	1									135	

(1) SMR CODE	(2) FEDERAL STOCK NUMBER	(3) DESCRIPTION REF NUMBER & MFR CODE	USABLE ON CODE	(4) UNIT OF MEAS	(5) QTY INC IN UNIT	(6) 30-DAY DS MAINT ALLOWANCE (a) 1-20	(b) 21-50	(c) 51-100	(7) 30-DAY GS MAINT ALLOWANCE (a) 1-20	(b) 21-50	(c) 51-100	(8) 1-YR ALW PER 100 EQUIP CNTGY	(9) DEPOT MAINT ALW PER 100 EQUIP	(10) ILLUSTRATION (a) FIG. NO.	(b) ITEM NO.
P2F		WHEEL ASSEMBLY, STEERING 1269579 (86403)		EA	1	*	*	*	*	*	*	*	*	135	44
P F	2530-730-7049	ARM ASSEMBLY, STEERING 836042-31 (77640)		EA	1	*	*	*	*	*	*	*	*	136	1
P F	5310-269-4052	NUT, PLAIN, HEXAGON: STEERING ARM, 5/8-18 THD SIZE		EA	1	*	*	*	*	*	*	*	*	136	2
P F	5310-655-9341	WASHER, LOCK: STEERING ARM, 5/8 IN.		EA	1	*	*	*	*	*	*	*	*	136	3
P F	5305-944-6024	SCREW, CAP, HEXAGON HEAD: STEERING ARM, 5/8-18 X 3 1/2 IN. LG		EA	1	*	*	*	*	*	*	*	*	136	4
P F	2530-755-7338	GEAR ASSEMBLY, STEERING TE71062 (77640)		EA	1	*	*	*	*	*	*	*	*	136	
P H		SCREW, CAP, HEXAGON HEAD: 5/8-11 X 2 IN. LG G271723 (77640)		EA	1				*	*	*	*	*	136	5
P H	5310-245-9882	WASHER, FLAT: COVER MTG, 41/64 ID X 1 1/8 IN. OD 028336 (77640)		EA	1				*	*	*	*	*	136	6
P H	5310-763-8920	NUT, PLAIN, HEXAGON: COVER MTG, 5/8-11 THD SIZE MS51967-20 (96906)		EA	3				*	*	*	*	*	136	7
P H	5310-820-6653	WASHER, LOCK: COVER MTG, 5/8 IN. MS35338-50 (96906)		EA	3				*	*	*	*	*	136	8
P H		SCREW, CAP, HEXAGON HEAD: COVER MTG, 5/8-11 X 3 1/2 IN. LG 020177 (77640)		EA	3				*	*	*	*	*	136	9
P H	5310-245-9882	WASHER, FLAT: COVER MTG, 41/64 ID X 1 1/8 IN. OD 028336 (77640)		EA	3				*	*	*	*	*	136	10
P O		PLUG, PIPE: SQUARE HEAD, 3/8 IN. NPT G444583 (77640)		EA	2	*	*	*	*	*	*	*	*	136	11
P O	2530-322-9970	PLUG, PIPE, VENT 037014 (77640)		EA	1	*	*	*	*	*	*	*	*	136	12
P H	5305-118-6533	SCREW, ASSEMBLED WASHER: SIDE COVER 020190 (77640)		EA	2				*	*	*	*	*	136	13
X2H		COVER ASSEMBLY, SIDE TE705001 (77640)		EA	1									136	14
P H	5310-358-6115	NUT, LOCK: ADJUSTING SCREW 025031 (77640)		EA	1				*	*	*	*	*	136	15
P H	5305-517-5254	SCREW, ADJUSTING 021065 (77640)		EA	1				*	*	*	*	*	136	16
P H	2530-728-7472	GASKET: SIDE COVER TE709001 (77640)		EA	1				*	*	*	*	*	136	17
X2H		LEVER SHAFT ASSEMBLY TE704101A1-575 (77640)		EA	1									136	18
P H	5340-128-2094	SHIM, BEARING 033150 (77640)		EA	1				*	*	*	*	*	136	19
P H		BEARING ASSEMBLY 044952 (77640)		EA	2				*	*	*	*	*	136	20
P H	5305-269-3212	SCREW, ASSEMBLED WASHER: COVER MTG, 3/8-16 X 1 1/8 IN. LG MS90725-61 (96906)		EA	4				*	*	*	*	*	136	21
X2H		COVER AND SEAL ASSEMBLY TE706001A1 (77640)		EA	1									136	22

(1) SMR CODE	(2) FEDERAL STOCK NUMBER	(3) DESCRIPTION REF NUMBER & MFR CODE	USABLE ON CODE	(4) UNIT OF MEAS	(5) QTY INC IN UNIT	(6) 30-DAY DS MAINT ALLOWANCE (a) 1-20	(b) 21-50	(c) 51-100	(7) 30-DAY GS MAINT ALLOWANCE (a) 1-20	(b) 21-50	(c) 51-100	(8) 1-YR ALW PER 100 EQUIP CNTGY	(9) DEPOT MAINT ALW PER 100 EQUIP	(10) ILLUSTRATION (a) FIG. NO.	(b) ITEM NO.
P H	5330-625-3604	SEAL, PLAIN, ENCASED 032223 (77640)		EA	1				*	*	*	*	*	136	23
P H	2530-769-6384	SHIM SET: 0.002 IN. THK 1034K1 (77640)		EA	V				*	*	*	*	*	136	24
P H	2530-517-5262	SHIM: 0.003 IN. THK 033036 (77640)		EA	V				*	*	*	*	*	136	24
P H	2530-518-6512	SHIM: 0.010 IN. THK 033037 (77640)		EA	V	*	*	*	*	*	*	*	*	136	24
XI		CAM TL703084S1 (77640)		EA	1									136	25
P H	3110-132-6916	CUP ASSEMBLY, BALL: CAM SHAFT 40002051 (77640)		EA	2	*	*	*	*	*	*	*	*	136	26
XI		PLUG 402246 (77640)		EA	1									136	27
P H		HOUSING ASSEMBLY, GEAR TL702010-250 (77640)		EA	1				*	*	*	*	*	136	28
P H	5330-050 0056	SEAL, PLAIN, ENCASED 032074 (77640)		EA	1				*	*	*	*	*	136	29
P H	3120-128-2079	BUSHING, SLEEVE: HOUSING ASSEMBLY 069013 (77640)		EA	1	*	*	*	*	*	*	*	*	136	30

(1) SMR CODE	(2) FEDERAL STOCK NUMBER	(3) DESCRIPTION REF NUMBER & MFR CODE / USABLE ON CODE	(4) UNIT OF MEAS	(5) QTY INC IN UNIT	(6) 30-DAY DS MAINT ALLOWANCE (a) 1-20	(b) 21-50	(c) 51-100	(7) 30-DAY GS MAINT ALLOWANCE (a) 1-20	(b) 21-50	(c) 51-100	(8) 1-YR ALW PER 100 EQUIP CNTGY	(9) DEPOT MAINT ALW PER 100 EQUIP	(10) ILLUSTRATION (a) FIG. NO.	(b) ITEM NO.
		GROUP 21 - OUTRIGGERS, FRAMES, STORAGE BOXES, AND MIRROR												
P O	5305-984-6193	SCREW, MACHINE: MICROSWITCH MTG, NO. 8-32 X 1/2 IN. LG 1167 (13841)	EA	8	*	*	*	*	*	*	*	*	137	1
P O	5310-045-3299	WASHER, LOCK: MICROSWITCH MTG, NO. 8 1298 (13841)	EA	8	*	*	*	*	*	*	*	*	137	2
M O		WIRE, MICROSWITCH MANUFACTURE FROM:	EA	4									137	3
P O		WIRE, ELECTRICAL, STRANDED, 50 FT REQUIRED FOR 4 OUTRIGGERS 21799 (13841)	FT	50	*	*	*	*	*	*				
P O	5930-064-0854	SWITCH, LIMIT: MICRO, OUTRIGGER ARM BZV6-2RN (91929)	EA	4	*	*	*	*	*	*	*	*	137	4
O	4010-165-5606	LINK, CONNECTING TYPE II, PER RRC-271, 5/8 IN.	EA	2									137	5
O	4030-163-0797	HOOK, GRAB: TYPE V, CLASS 2, SIZE 5/8 IN., PER RRC-271	EA	2									137	6
O	4010-286-5535	CHAIN, CLOSE LINK: HIGH TEST WELDED STEEL TYPE 1, GRADE C, CLASS 2 PER RRC-271, 5/8 IN. X 20 FT LG	FT	20									137	7
X2F		OUTRIGGER ASSEMBLY, FRONT H446A121 (13841)	EA	1									137	
P O		NUT, SELF-LOCKING, HEXAGON: ARM MTG PIN 52E242 (72962)	EA	2	*	*	*	*	*	*	*	*	137	8
P O		PIN, OUTRIGGER ARM 18822 (13841)	EA	2	*	*	*	*	*	*	*	*	137	9
P O	4730-050-4208	FITTING, LUBRICATION: OUTRIGGER MS15003-1 (96906)	EA	4	*	*	*	*	*	*	*	*	137	10
P O		SCREW, CAP, HEXAGON HEAD: BALL CAP, 5/8-18 X 2 IN. LG 10865 (13841)	EA	4	*	*	*	*	*	*	*	*	137	11
P O	5310-820-6653	WASHER, LOCK: BALL CAP, 5/8 IN. 1890 (13841)	EA	4	*	*	*	*	*	*	*	*	137	12
X2O		CAP, BALL 17183 (13841)	EA	2									137	13
X2O		SHIM, BALL CAP 17185 (13841)	EA	8									137	14
P O		PAD, OUTRIGGER 17182 (13841)	EA	2	*	*	*	*	*	*	*	*	137	15
X2F		BALL, ARM 17191 (13841)	EA	2									137	16
P F		ARM, OUTRIGGER 18824 (13841)	EA	2	*	*	*	*	*	*	*	*	137	17
X2F		OUTRIGGER, FRONT 18795 (13841)	EA	1									137	18
X2F		OUTRIGGER ASSEMBLY, REAR H446A125 (13841)	EA	1									138	
P O		NUT, SELF-LOCKING, HEXAGON: ARM MTG PIN 52E242 (72962)	EA	2	*	*	*	*	*	*	*	*	138	1
P O		PIN, OUTRIGGER ARM 18822 (13841)	EA	2	*	*	*	*	*	*	*	*	138	2

(1) SMR CODE	(2) FEDERAL STOCK NUMBER	(3) DESCRIPTION REF NUMBER & MFR CODE	USABLE ON CODE	(4) UNIT OF MEAS	(5) QTY INC IN UNIT	(6) 30-DAY DS MAINT ALLOWANCE (a) 1-20	(b) 21-50	(c) 51-100	(7) 30-DAY GS MAINT ALLOWANCE (a) 1-20	(b) 21-50	(c) 51-100	(8) 1-YR ALW PER 100 EQUIP CNTGY	(9) DEPOT MAINT ALW PER 100 EQUIP	(10) ILLUSTRATION (a) FIG. NO.	(b) ITEM NO.
P O	4730-050-4208	FITTING, LUBRICATION: OUTRIGGER ARM MS15003-1 (96906)		EA	4	*	*	*	*	*	*	*	*	138	3
P O		SCREW, CAP, HEXAGON HEAD: BALL CAP, 5/8-18 X 2 IN. LG 10865 (13841)		EA	4	*	*	*	*	*	*	*	*	138	4
P O	5310-820-6653	WASHER, LOCK: BALL CAP, 5/8 IN. 1890 (13841)		EA	4	*	*	*	*	*	*	*	*	138	5
X20		CAP, BALL 17183 (13841)		EA	2									138	6
X20		SHIM, BALL CAP 17185 (13841)		EA	8									138	7
P O		PAD, OUTRIGGER 17182 (13841)		EA	2	*	*	*	*	*	*	*	*	138	8
X2F		BALL, ARM 17191 (13841)		EA	2									138	9
P F		ARM, OUTRIGGER 18824 (13841)		EA	2	*	*	*	*	*	*	*	*	138	10
X2F		OUTRIGGER, REAR 18821 (13841)		EA	1									138	11
P O		MIRROR ASSEMBLY: REAR VIEW 15901 (30226)		EA	2	*	*	*	*	*	*	*	*	139	1
P O		NUT, SELF-LOCKING, HEXAGON: MIRROR TO BRACKET, 1/4-28 THD SIZE 158-34A (30226)		EA	8	*	*	*	*	*	*	*	*	139	2
P O		SCREW, CAP, HEXAGON HEAD: MIRROR TO BRACKET, 1/4-28 X 3/4 IN. LG 158-15 (30226)		EA	8	*	*	*	*	*	*	*	*	139	3
P O		NUT, SELF-LOCKING, HEXAGON: DETENT ASSEMBLY, 3/8-16 THD SIZE 158J1A (30226)		EA	4	*	*	*	*	*	*	*	*	139	4
X20		SPRING, HELICAL, COMPRESSION: DETENT 160-1 (30226)		EA	4									139	5
P O		SCREW, CAP, HEXAGON HEAD: DETENT ASSEMBLY, 3/8-16 X 2 IN. LG 160S (30226)		EA	4	*	*	*	*	*	*	*	*	139	6
X20		BRACKET, MOUNTING 160A (30226)		EA	4									139	7
X20		DETENT ASSEMBLY, LOOP 158H4 (30226)		EA	2									139	8
P O	2540-485-9500	HEAD ASSEMBLY, MIRROR 158K (30226)		EA	2	*	*	*	*	*	*	*	*	139	9
P O	5310-014-2247	NUT, PLAIN, HEXAGON: MIRROR BRACE MTG, 1/4-28 THD SIZE 4200 (23382)		EA	4	*	*	*	*	*	*	*	*	139	10
P O	5310-018-7241	WASHER, LOCK: MIRROR BRACE MTG, 1/4 IN. 4312 (23382)		EA	4	*	*	*	*	*	*	*	*	139	11
P O	5305-068-0506	SCREW, CAP, HEXAGON HEAD: MIRROR BRACE MTG, 1/4-28 X 3/4 IN. LG		EA	4	*	*	*	*	*	*	*	*	139	12
X20		BRACE, MIRROR 332191 (23382)		EA	2									139	13
P O	3810-802-2677	NUT, PLAIN, HEXAGON: MIRROR BRACKET MTG, 3/8-16 THD SIZE 30362 (23382)		EA	4	*	*	*	*	*	*	*	*	139	14

(1) SMR CODE	(2) FEDERAL STOCK NUMBER	(3) DESCRIPTION REF NUMBER & MFR CODE	USABLE ON CODE	(4) UNIT OF MEAS	(5) QTY INC IN UNIT	(6) 30-DAY OS MAINT ALLOWANCE (a) 1-20	(b) 21-50	(c) 51-100	(7) 30-DAY GS MAINT ALLOWANCE (a) 1-20	(b) 21-50	(c) 51-100	(8) 1-YR ALW PER 100 EQUIP CNTGY	(9) DEPOT MAINT ALW PER 100 EQUIP	(10) ILLUSTRATION (a) FIG. NO.	(b) ITEM NO.
P O	5310-018-7123	WASHER, LOCK: MIRROR BRACKET MTG, 3/8 IN. 4313 (23382)		EA	4	*	*	*	*	*	*	*	*	139	15
P O	5305-269-3213	SCREW, CAP, HEXAGON HEAD: MIRROR BRACKET MTG, 3/8-16 X 1 1/4 IN. LG MS90725-62 (96906)		EA	4	*	*	*	*	*	*	*	*	139	16
X20		BRACKET: LEFT HAND MIRROR 332189 (23382)		EA	1									139	17
X20		BRACKET: RIGHT HAND MIRROR 332190 (23382)		EA	1									139	17
A O		INFLATOR ASSEMBLY, TIRE 333440 (23382)		EA	1									140	
P O		INFLATOR, TIRE 69J1-1506 (94894)		EA	1	*	*	*	*	*	*	*	*	140	1
P O		ADAPTER, INFLATOR: TIRE STANDARD		EA	1	*	*	*	*	*	*	*	*	140	2
P O		ADAPTER, INFLATOR: JUMBO		EA	1	*	*	*	*	*	*	*	*	140	3
P O	4730-595-0083	COUPLING HALF, QUICK DISCONNECT MS35746-1 (96906)		EA	1	*	*	*	*	*	*	*	*	140	4
P O		HOSE ASSEMBLY 138117 (23382)		EA	1	*	*	*	*	*	*	*	*	140	5
P O	4730-555-9007	BUSHING, PIPE: HOSE TO COUPLER 110B (30327)		EA	1	*	*	*	*	*	*	*	*	140	6
X20		COUPLER, AIR MS35746-1 (96906)		EA	1									140	7
P O	6150-073-1268	CABLE ASSEMBLY, SLAVE 7729732 (19207)		EA	1	*	*	*	*	*	*	*	*	141	1
X20		COVER, RECEPTACLE 7731428 (00000)		EA	1									141	2
P O	5310-014-2247	NUT, PLAIN, HEXAGON: RECEPTACLE MTG, 1/4-28 THD SIZE 4200 (23382)		EA	4	*	*	*	*	*	*	*	*	141	3
P O	5310-018-7241	WASHER, LOCK: RECEPTACLE MTG, 1/4 IN. 4312 (23382)		EA	4	*	*	*	*	*	*	*	*	141	4
P O		SCREW, CAP, HEXAGON HEAD: RECEPTACLE MTG, 1/4-28 X 1 IN. LG 30417 (23382)		EA	4	*	*	*	*	*	*	*	*	141	5
P O	5935-814-7432	CONNECTOR, RECEPTACLE: SLAVE MS75058-1 (96906)		EA	1	*	*	*	*	*	*	*	*	141	6
M O		HARNESS, CHARGING 136854 (23382) MANUFACTURE FROM:		EA	1									141	7
P O		TERMINAL, CONNECTOR 10100327 (23382)		EA	2	*	*	*	*	*	*			141	8
P O	5970-401-1642	INSULATOR BUSHING: CABLE 57320 (23382)		EA	1	*	*	*	*	*	*			141	9
P O		CABLE, ELECTRICAL, 4 FT, 8 IN. REQUIRED 1000641 (23382)		FT	V	*	*	*	*	*	*			141	10
P O		NUT, PLAIN, HEXAGON: RECEPTACLE BRACKET MTG, 5/16-24 THD SIZE 4202 (23382)		EA	2	*	*	*	*	*	*	*	*	141	11
P O		WASHER, LOCK: RECEPTACLE BRACKET MTG, 5/16 IN. 4318 (23382)		EA	2	*	*	*	*	*	*	*	*	141	12

(1) SMR CODE	(2) FEDERAL STOCK NUMBER	(3) DESCRIPTION REF NUMBER & MFR CODE	USABLE ON CODE	(4) UNIT OF MEAS	(5) QTY INC IN UNIT	(6) 30-DAY DS MAINT ALLOWANCE (a) 1-20	(b) 21-50	(c) 51-100	(7) 30-DAY GS MAINT ALLOWANCE (a) 1-20	(b) 21-50	(c) 51-100	(8) 1-YR ALW PER 100 EQUIP CNTGY	(9) DEPOT MAINT ALW PER 100 EQUIP	(10) ILLUSTRATION (a) FIG. NO.	(b) ITEM NO.
P O		SCREW, CAP, HEXAGON HEAD: RECEPTACLE BRACKET MTG, 5/16-24 X 3/4 IN. LG 165150 (23382)		EA	2	*	*	*	*	*	*	*	*	141	13
X20		BRACKET, RECEPTACLE 332160 (23382)		EA	1									141	14
P O		TERMINAL, BATTERY 7320532 (00000)		EA	2	*	*	*	*	*	*	*	*	141	15
P O	5940-549-6583	TERMINAL, BATTERY MS75004-2 (96906)		EA	2	*	*	*	*	*	*	*	*	141	16
M O		CABLE, BATTERY: JUMPER 136852 (23382) MANUFACTURE FROM:		EA	1									141	17
P O		TERMINAL, CONNECTOR 10100327 (23382)		EA	1	*	*	*	*	*	*			141	18
P O		TERMINAL, CONNECTOR 10100328 (23382)		EA	1	*	*	*	*	*	*			141	19
P O		CABLE, ELECTRICAL, 12 IN. REQUIRED 1000641 (23382)		FT	V	*	*	*	*	*	*			141	20
P O	5310-531-1194	NUT, PLAIN, HEXAGON: BATTERY GROUND, 3/8-24 THD SIZE		EA	1	*	*	*	*	*	*	*	*	141	21
P O	5310-953-8628	WASHER, LOCK: BATTERY GROUND, 3/8 IN.		EA	2	*	*	*	*	*	*	*	*	141	22
P O	5305-269-2805	SCREW, CAP, HEXAGON HEAD: BATTERY GROUND, 3/8-24 X 1 1/4 IN. LG		EA	1	*	*	*	*	*	*	*	*	141	23
M O		CABLE, BATTERY: GROUND 136853 (23382) MANUFACTURE FROM:		EA	1									141	24
P O		TERMINAL, CONNECTOR 10100327 (23382)		EA	2	*	*	*	*	*	*			141	25
P O		CABLE, ELECTRICAL, 18 IN. REQUIRED 1000641 (23382)		FT	V	*	*	*	*	*	*			141	26
M O		CABLE, STARTER SOLENOID 136851 (23382) MANUFACTURE FROM:		EA	1									141	27
P O		TERMINAL, CONNECTOR 10100327 (23382)		EA	1	*	*	*	*	*	*			141	28
P O		TERMINAL, CONNECTOR 10100328 (23382)		EA	1	*	*	*	*	*	*			141	29
P O	5970-401-1692	INSULATOR BUSHING, CABLE 57320 (23382)		EA	2	*	*	*	*	*	*			141	30
P O		CABLE, ELECTRICAL, 9 FT 10 IN. REQUIRED 1000641 (23382)		FT	V	*	*	*	*	*	*			141	31
X20		GROMMET, BATTERY CABLE 191658 (23382)		EA	2									141	32
P O	5340-731-7856	GROMMET, BATTERY CABLE 51 (74928)		EA	7	*	*	*	*	*	*	*	*	141	32
P O		NUT, PLAIN, HEXAGON: BATTERY BOX MTG, 5/16-24 THD SIZE 4202 (23382)		EA	4	*	*	*	*	*	*	*	*	141	33
P O		WASHER, LOCK: BATTERY BOX MTG, 5/16 IN. 4318 (23382)		EA	4	*	*	*	*	*	*	*	*	141	34
P O	5306-225-9089	BOLT, MACHINE: BATTERY BOX MTG, 5/16-24 X 1 IN. LG MS90726-34 (96906)		EA	4	*	*	*	*	*	*	*	*	141	35

(1) SMR CODE	(2) FEDERAL STOCK NUMBER	(3) DESCRIPTION REF NUMBER & MFR CODE	USABLE ON CODE	(4) UNIT OF MEAS	(5) QTY INC IN UNIT	(6) 30-DAY DS MAINT ALLOWANCE (a) 1-20	(b) 21-50	(c) 51-100	(7) 30-DAY GS MAINT ALLOWANCE (a) 1-20	(b) 21-50	(c) 51-100	(8) 1-YR ALW PER 100 EQUIP CNTGY	(9) DEPOT MAINT ALW PER 100 EQUIP	(10) ILLUSTRATION (a) FIG. NO.	(b) ITEM NO.
P O		NUT, PLAIN, WING 30349 (23382)		EA	5	*	*	*	*	*	*	*	*	141	36
P O		BOLT, HOOK 7539501 (00000)		EA	5	*	*	*	*	*	*	*	*	141	37
P O	2590-040-2187	RETAINER, BATTERY MS53046-3 (96906)		EA	1	*	*	*	*	*	*	*	*	141	38
X20		BOX ASSEMBLY, BATTERY 330717 (23382)		EA	1									141	39
P O	5310-014-2247	NUT, PLAIN, HEXAGON: PROP MTG, 1/4-28 THD SIZE 4200 (23382)		EA	4	*	*	*	*	*	*	*	*	141	40
P O	5310-018-7241	WASHER, LOCK: PROP MTG, 1/4 IN. 1967 (23382)		EA	4	*	*	*	*	*	*	*	*	141	41
P O	5305-993-2463	SCREW, MACHINE: PROP MTG, 1/4-20 X 1/2 IN. LG AN520-416R8 (88044)		EA	4	*	*	*	*	*	*	*	*	141	42
X20		PROP, SPRING LATCH 198625 (23382)		EA	1									141	43
P O		NUT, PLAIN, HEXAGON: CLAMP AND HINGE, NO. 10-32 THD SIZE 6961 (23382)		EA	18	*	*	*	*	*	*	*	*	141	44
P O	5310-596-7691	WASHER, LOCK: CLAMP AND HINGE, NO. 10 MS35335-32 (96906)		EA	18	*	*	*	*	*	*	*	*	141	45
P O	5305-990-6444	SCREW, MACHINE: CLAMP AND HINGE, NO. 10-32 X 3/8 IN. LG MS35207-261 (96906)		EA	18	*	*	*	*	*	*	*	*	141	46
P O		CLAMP ASSEMBLY 7969299 (00000)		EA	2	*	*	*	*	*	*	*	*	141	47
X1		MAT 315842 (23382)		EA	1									141	48
X1		COVER 330717-2 (23382)		EA	1									141	49
X1		HINGE 329181 (23382)		EA	1									141	50
X1		BODY 330717-1 (23382)		EA	1									141	51
P O		NUT, PLAIN, HEXAGON: BATTERY BOX BRACKET MTG, 5/16-24 THD SIZE 4202 (23382)		EA	6	*	*	*	*	*	*	*	*	141	52
P O		WASHER, LOCK: BATTERY BOX BRACKET MTG, 5/16 IN. 4318 (23382)		EA	6	*	*	*	*	*	*	*	*	141	53
P O	5310-639-1532	WASHER, FLAT: BATTERY BOX BRACKET MTG, 5/16 IN.		EA	6	*	*	*	*	*	*	*	*	141	54
P O	5306-225-9089	BOLT, MACHINE: BATTERY BOX BRACKET MTG, 5/16-24 X 1 IN. LG MS90726-34 (96906)		EA	6	*	*	*	*	*	*	*	*	141	55
X20		BRACKET, BATTERY BOX 333435 (23382)		EA	1									141	56
P O	5310-014-2247	NUT, PLAIN, HEXAGON: TOOL BOX MTG, 1/4-28 THD SIZE 4200 (23382)		EA	4	*	*	*	*	*	*	*	*	141	57
P O	5310-018-7241	WASHER, LOCK: TOOL BOX MTG, 1/4 IN. 4312 (23382)		EA	4	*	*	*	*	*	*	*	*	141	58
P O	5305-068-0506	SCREW, CAP, HEXAGON HEAD: TOOL BOX MTG, 1/4-28 X 3/4 IN. LG		EA	4	*	*	*	*	*	*	*	*	141	59

(1) SMR CODE	(2) FEDERAL STOCK NUMBER	(3) DESCRIPTION REF NUMBER & MFR CODE	USABLE ON CODE	(4) UNIT OF MEAS	(5) QTY INC IN UNIT	(6) 30-DAY OS MAINT ALLOWANCE (a) 1-20	(b) 21-50	(c) 51-100	(7) 30-DAY GS MAINT ALLOWANCE (a) 1-20	(b) 21-50	(c) 51-100	(8) 1-YR ALW PER 100 EQUIP CNTGY	(9) DEPOT MAINT ALW PER 100 EQUIP	(10) ILLUSTRATION (a) FIG. NO.	(b) ITEM NO.
X20		BOX ASSEMBLY, TOOL 330678 (23382)		EA	1									141	60
P O		NUT, PLAIN, HEXAGON: HINGE AND CLAMP MTG, NO. 10-32 THD SIZE 6961 (23382)		EA	18	*	*	*	*	*	*	*	*	141	61
P O	5310-596-7691	WASHER, LOCK: HINGE AND CLAMP MTG, NO. 10 MS35335-32 (96906)		EA	18	*	*	*	*	*	*	*	*	141	62
P O	5305-990-6444	SCREW, MACHINE: HINGE AND CLAMP MTG, NO. 10-32 X 3/8 IN. LG MS35207-261 (96906)		EA	18	*	*	*	*	*	*	*	*	141	63
X20		CLAMP ASSEMBLY 7969299 (00000)		EA	2									141	64
X1		COVER 330678-2 (23382)		EA	1									141	65
X1		HINGE 329181 (23382)		EA	1									141	66
X1		BOX 330678-1 (23382)		EA	1									141	67
P O		NUT, PLAIN, HEXAGON: TOOL BOX BRACKET MTG, 5/16-24 THD SIZE 4202 (23382)		EA	4	*	*	*	*	*	*	*	*	141	68
P O		WASHER, LOCK: TOOL BOX BRACKET MTG, 5/16 IN. 4318 (23382)		EA	4	*	*	*	*	*	*	*	*	141	69
P O	5310-639-1532	WASHER, FLAT: TOOL BOX BRACKET MTG, 5/16 IN.		EA	4	*	*	*	*	*	*	*	*	141	70
P O	5306-225-9089	BOLT, MACHINE: TOOL BOX BRACKET MTG, 5/16-24 X 1 IN. LG MS90726-34 (96906)		EA	4	*	*	*	*	*	*	*	*	141	71
X20		BRACKET, TOOL BOX 333710 (23382)		EA	1									141	72
P O	5310-763-8920	NUT, PLAIN, HEXAGON: EYE BOLT MTG, 5/8-11 THD SIZE MS51967-20 (96906)		EA	2	*	*	*	*	*	*	*	*	142	1
P O	5310-820-6653	WASHER, LOCK: EYE BOLT MTG, 5/8 IN. MS35338-50 (96906)		EA	2	*	*	*	*	*	*	*	*	142	2
X20		BOLT, EYE 567-27 (71843)		EA	2									142	3
P O	2540-047-3926	PINTLE ASSEMBLY, TOWING 8710630 (19207)		EA	1	*	*	*	*	*	*	*	*	142	4
P O	5315-013-7214	PIN, COTTER: PINTLE HOOK MS24665-359 (96906)		EA	1	*	*	*	*	*	*	*	*	142	5
P O	4730-050-4203	FITTING, LUBRICATION: PINTLE MS15001-1 (96906)		EA	2	*	*	*	*	*	*	*	*	142	6
P O		NUT, PLAIN, HEXAGON: HEADLIGHT BRACKET MTG, 5/16-24 THD SIZE 4202 (23382)		EA	12	*	*	*	*	*	*	*	*	143	1
P O		WASHER, LOCK: HEADLIGHT BRACKET MTG, 5/16 IN. 7556 (23382)		EA	12	*	*	*	*	*	*	*	*	143	2
P O	5310-728-2044	WASHER, LOCK: HEADLIGHT BRACKET, 5/16 IN.		EA	2	*	*	*	*	*	*	*	*	143	3
P O	5306-225-9087	BOLT, MACHINE: HEADLIGHT BRACKET MTG, 5/16-24 X 3/4 IN. LG MS90726-32 (96906)		EA	12	*	*	*	*	*	*	*	*	143	4
X20		BRACKET, HEADLIGHT MOUNTING 333761 (23382)		EA	2									143	5

(1) SMR CODE	(2) FEDERAL STOCK NUMBER	(3) DESCRIPTION REF NUMBER & MFR CODE	USABLE ON CODE	(4) UNIT OF MEAS	(5) QTY INC IN UNIT	(6) 30-DAY DS MAINT ALLOWANCE (a) 1-20	(b) 21-50	(c) 51-100	(7) 30-DAY GS MAINT ALLOWANCE (a) 1-20	(b) 21-50	(c) 51-100	(8) 1-YR ALW PER 100 EQUIP CNTGY	(9) DEPOT MAINT ALW PER 100 EQUIP	(10) ILLUSTRATION (a) FIG. NO.	(b) ITEM NO.
P O		SCREW, TAPPING, THREAD FORMING: HEADLIGHT BOX COVER MTG 161069 (23382)		EA	14	*	*	*	*	*	*	*	*	143	6
P O	5310-014-2247	NUT, PLAIN, HEXAGON: HEADLIGHT BOX COVER MTG, 1/4-28 THD SIZE 4200 (23382)		EA	10	*	*	*	*	*	*	*	*	143	7
P O	5310-018-7241	WASHER, LOCK: HEADLIGHT BOX COVER MTG, 1/4 IN. 4312 (23382)		EA	10	*	*	*	*	*	*	*	*	143	8
P O	5305-267-8953	SCREW, CAP, HEXAGON HEAD: HEADLIGHT BOX COVER MTG, 1/4-28 X 1 IN. LG 4194 (23382)		EA	10	*	*	*	*	*	*	*	*	143	9
X20		COVER, HEADLIGHT BOX 331302 (23382)		EA	2									143	10
P O	5310-014-2247	NUT, PLAIN, HEXAGON: HEADLIGHT BOX MTG, 1/4-28 THD SIZE 4200 (23382)		EA	10	*	*	*	*	*	*	*	*	143	11
P O	5310-018-7241	WASHER, LOCK: HEADLIGHT BOX MTG, 1/4 IN. 4312 (23382)		EA	10	*	*	*	*	*	*	*	*	143	12
P O	5310-595-6993	WASHER, FLAT: HEADLIGHT BOX MTG, 1/4 IN.		EA	10	*	*	*	*	*	*	*	*	143	13
P O	5305-068-0506	SCREW, CAP, HEXAGON HEAD: HEADLIGHT BOX MTG, 1/4-28 X 3/4 IN. LG		EA	10	*	*	*	*	*	*	*	*	143	14
X20		BOX, HEADLIGHT: LEFT HAND 330715 (23382)		EA	1									143	15
X20		BOX, HEADLIGHT: RIGHT HAND 330714 (23382)		EA	1									143	15
P O		SCREW, TAPPING, THREAD CUTTING: REAR LIGHT BOX COVER MTG, NO. 10-24 X 5/8 IN. LG 160515 (23382)		EA	12	*	*	*	*	*	*	*	*	143	16
X20		COVER, LIGHT BOX: REAR 331314 (23382)		EA	2									143	17
P O	5310-014-2247	NUT, PLAIN, HEXAGON: REAR LIGHT BOX MTG, 1/4-28 THD SIZE 4200 (23382)		EA	20	*	*	*	*	*	*	*	*	143	18
P O	5310-018-7241	WASHER, LOCK: REAR LIGHT BOX MTG, 1/4 IN. 4312 (23382)		EA	20	*	*	*	*	*	*	*	*	143	19
P O	5310-595-6993	WASHER, FLAT: REAR LIGHT BOX MTG, 1/4 IN.		EA	20	*	*	*	*	*	*	*	*	143	20
P O	5305-068-0506	SCREW, CAP, HEXAGON HEAD: REAR LIGHT BOX MTG, 1/4-28 X 3/4 IN. LG		EA	20	*	*	*	*	*	*	*	*	143	21
X20		BOX, LIGHT AND REFLECTOR: REAR 331295 (23382)		EA	2									143	22
P O		NUT, PLAIN, HEXAGON: GRAB HANDLE MTG, 5/16-24 THD SIZE 4202 (23382)		EA	2	*	*	*	*	*	*	*	*	143	23
P O		WASHER, LOCK: GRAB HANDLE MTG, 5/16 IN. 4318 (23382)		EA	2	*	*	*	*	*	*	*	*	143	24
P O	5310-639-1532	WASHER, FLAT: GRAB HANDLE MTG, 5/16 IN.		EA	2	*	*	*	*	*	*	*	*	143	25
P O	5306-225-9089	BOLT, MACHINE: GRAB HANDLE MTG, 5/16-24 X 1 IN. LG MS90726-34 (96906)		EA	2	*	*	*	*	*	*	*	*	143	26

(1) SMR CODE	(2) FEDERAL STOCK NUMBER	(3) DESCRIPTION REF NUMBER & MFR CODE / USABLE ON CODE	(4) UNIT OF MEAS	(5) QTY INC IN UNIT	(6) 30-DAY DS MAINT ALLOWANCE (a) 1-20	(b) 21-50	(c) 51-100	(7) 30-DAY GS MAINT ALLOWANCE (a) 1-20	(b) 21-50	(c) 51-100	(8) 1-YR ALW PER 100 EQUIP CNTGY	(9) DEPOT MAINT ALW PER 100 EQUIP	(10) ILLUSTRATION (a) FIG. NO.	(b) ITEM NO.
X20		HANDLE, GRAB 192090 (23382)	EA	1									143	27
P O		GROMMET, RUBBER: BLACKOUT HEADLIGHT WIRING 1836 (14370)	EA	2	*	*	*	*	*	*	*	*	143	28
P O	5325-291-7705	GROMMET, RUBBER: LIGHT WIRES 2214 (70485)	EA	7	*	*	*	*	*	*	*	*	143	28
P O		NUT, PLAIN, HEXAGON: DOOR PLUNGER AND SOCKET MTG, 1/4-28 THD SIZE MS35290-425 (96906)	EA	4	*	*	*	*	*	*	*	*	143	29
P O		WASHER, LOCK: DOOR PLUNGER AND SOCKET MTG, 1/4 IN. 4301 (23382)	EA	4	*	*	*	*	*	*	*	*	143	30
P O	5310-595-6993	WASHER, FLAT: DOOR SOCKET MTG, 1/4 IN.	EA	2	*	*	*	*	*	*	*	*	143	31
P O	5305-267-8974	SCREW, MACHINE: DOOR PLUNGER PLUNGER SOCKET MTG, 1/4-28 X 1 IN. LG MS90726-8 (96906)	EA	2	*	*	*	*	*	*	*	*	143	32
P O		SOCKET, WITH INSERT: DOOR STOP DH103 (70615)	EA	1	*	*	*	*	*	*	*	*	143	33
P O		SCREW, MACHINE: DOOR PLUNGER MTG, 1/4-28 X 2 1/4 IN. LG 162415 (23382)	EA	2	*	*	*	*	*	*	*	*	143	34
P O		PLUNGER, DOOR HOLDER DH218 (70615)	EA	1	*	*	*	*	*	*	*	*	143	35
P O	5310-975-2075	NUT, PLAIN, HEXAGON: DOOR HOLDER BRACKET MTG, 3/8-24 THD SIZE MS35691-21 (96906)	EA	2	*	*	*	*	*	*	*	*	143	36
P O	5310-018-7123	WASHER, LOCK: DOOR HOLDER BRACKET MTG, 3/8 IN. 4313 (23382)	EA	2	*	*	*	*	*	*	*	*	143	37
P O	5305-269-2805	SCREW, CAP, HEXAGON HEAD: DOOR HOLDER BRACKET MTG, 3/8-24 X 1 1/4 IN. LG MS90726-62 (96906)	EA	2	*	*	*	*	*	*	*	*	143	38
X20		BRACKET: DOOR HOLDER 334589 (23382)	EA	1									143	39
P O	3810-802-2677	NUT, PLAIN, HEXAGON: FENDER MTG, 3/8-16 THD SIZE 30362 (23382)	EA	36	*	*	*	*	*	*	*	*	143	40
P O	5310-018-7123	WASHER, LOCK: FENDER MTG, 3/8 IN. 4313 (23382)	EA	36	*	*	*	*	*	*	*	*	143	41
P O	5310-080-6004	WASHER, FLAT: FENDER MTG, 3/8 IN. MS27183-14 (96906)	EA	36	*	*	*	*	*	*	*	*	143	42
P O		BOLT, RIBBED NECK: FENDER MTG, 3/8-16 X 1 IN. LG 165007 (23382)	EA	36	*	*	*	*	*	*	*	*	143	43
X20		FENDER, VEHICULAR: RIGHT HAND FRONT 330710 (23382)	EA	1									143	44
X20		FENDER, VEHICULAR: LEFT HAND FRONT 330711 (23382)	EA	1									143	44
X20		FENDER, VEHICULAR: RIGHT HAND REAR 330712 (23382)	EA	1									143	45
X20		FENDER, VEHICULAR: LEFT HAND REAR 330713 (23382)	EA	1									143	45
P O	5310-732-0558	NUT, PLAIN, HEXAGON: FUEL TANK COVER, GRAB HANDLE AND STEPS, 3/8-16 THD SIZE MS51967-8 (96906)	EA	9	*	*	*	*	*	*	*	*	143	46

(2) FEDERAL STOCK NUMBER	(3) DESCRIPTION REF NUMBER & MFR CODE	USABLE ON CODE	(4) UNIT OF MEAS	(5) QTY INC IN UNIT	(6) 30-DAY OS MAINT ALLOWANCE (a) 1-20	(b) 21-50	(c) 51-100	(7) 30-DAY GS MAINT ALLOWANCE (a) 1-20	(b) 21-50	(c) 51-100	(8) 1-YR ALW PER 100 EQUIP CNTGY	(9) DEPOT MAINT ALW PER 100 EQUIP	(10) ILLUSTRATION (a) FIG. NO.	(b) ITEM NO.
5310-637-9541	WASHER, LOCK: FUEL TANK COVER, GRAB HANDLE AND STEPS, 3/8 IN. MS35338-46 (96906)		EA	9	*	*	*	*	*	*	*	*	143	47
5305-269-3213	SCREW, CAP, HEXAGON HEAD: FUEL TANK COVER, GRAB HANDLE AND STEPS, 3/8-16 X 1 1/4 IN. LG MS90725-62 (96906)		EA	9	*	*	*	*	*	*	*	*	143	48
	[illegible], [illegible] TANK		EA	1									143	49
	GRAB HANDLE		EA	1									143	50
5310-022-5851	NUT, PLAIN, HEXAGON: SUPPORT MTG, 1/2-20 THD SIZE		EA	4	*	*	*	*	*	*	*	*	143	51
5310-550-1680	WASHER, LOCK: SUPPORT MTG, 1/2 IN.		EA	4	*	*	*	*	*	*	*	*	143	52
5305-761-4227	SCREW, CAP, HEXAGON HEAD: SUPPORT MTG, 1/2-20 X 1 1/4 IN. LG		EA	4	*	*	*	*	*	*	*	*	143	53
5310-531-1194	NUT, PLAIN, HEXAGON: FUEL TANK COVER, 3/8-24 THD SIZE		EA	4	*	*	*	*	*	*	*	*	143	54
5310-680-7297	WASHER, LOCK: FUEL TANK COVER, 3/8 IN.		EA	4	*	*	*	*	*	*	*	*	143	55
5305-269-3236	SCREW, CAP, HEXAGON HEAD: FUEL TANK COVER, 3/8-24 X 1 IN. LG		EA	4	*	*	*	*	*	*	*	*	143	56
	COVER, FUEL TANK 332383 (23382)		EA	1									143	57
	NUT, PLAIN, HEXAGON: CAB SUPPORT MTG, 5/16-24 THD SIZE 4202 (23382)		EA	4	*	*	*	*	*	*	*	*	143	58
	WASHER, LOCK: CAB SUPPORT MTG, 5/16 IN. 4318 (23382)		EA	4	*	*	*	*	*	*	*	*	143	59
5305-225-8497	SCREW, CAP, HEXAGON HEAD: CAB SUPPORT MTG, 5/16-18 X 3/4 IN. LG MS90725-32 (96906)		EA	4	*	*	*	*	*	*	*	*	143	60
	SUPPORT, CAB, BASE 332369 (23382)		EA	1									143	61
2530-898-4805	NUT, PLAIN, HEXAGON: FENDER BRACKET MTG, 1/2-20 THD SIZE 4216 (23382)		EA	16	*	*	*	*	*	*	*	*	143	62
5310-834-7606	WASHER, LOCK: FENDER BRACKET MTG, 1/2 IN. MS35340-48 (96906)		EA	16	*	*	*	*	*	*	*	*	143	63
	WASHER, FLAT: FENDER BRACKET MTG, 1/2 IN. 6489 (23382)		EA	16	*	*	*	*	*	*	*	*	143	64
5305-725-4183	SCREW, CAP, HEXAGON HEAD: FENDER BRACKET MTG, 1/2-20 X 1 1/2 IN. LG MS90726-113 (96906)		EA	16	*	*	*	*	*	*	*	*	143	65
	BRACKET, FENDER: RIGHT HAND FRONT 332357 (23382)		EA	1									143	66
	BRACKET, FENDER: LEFT HAND FRONT 332358 (23382)		EA	1									143	66
	BRACKET: FRONT FENDER 331303 (23382)		EA	1									143	67
	BRACKET: FRONT FENDER 331602 (23382)		EA	1									143	67
	BRACKET, FENDER: LEFT HAND REAR 331288 (23382)		EA	1									143	68
	BRACKET, FENDER: RIGHT HAND REAR 331287 (23382)		EA	1									143	68

(1) SMR CODE	(2) FEDERAL STOCK NUMBER	(3) DESCRIPTION REF NUMBER & MFR CODE	USABLE ON CODE	(4) UNIT OF MEAS	(5) QTY INC IN UNIT	(6) 30-DAY DS MAINT ALLOWANCE (a) 1-20	(b) 21-50	(c) 51-100	(7) 30-DAY GS MAINT ALLOWANCE (a) 1-20	(b) 21-50	(c) 51-100	(8) 1-YR ALW PER 100 EQUIP CNTGY	(9) DEPOT MAINT ALW PER 100 EQUIP	(10) ILLUSTRATION (a) FIG. NO.	(b) ITEM NO.
X20		BRACKET: REAR FENDER 331286 (23382)		EA	2									143	69
X20		SUPPORT, BRACKET 331282 (23382)		EA	1									143	70
P F	5305-269-2807	SCREW, CAP, HEXAGON HEAD: BRACE MTG, 3/8-24 X 1 1/2 IN. LG MS35298-64 (96906)		EA	2	*	*	*	*	*	*	*	*	144	1
P F	5305-269-2808	SCREW, CAP, HEXAGON HEAD: BRACE MTG, 3/8-24 X 1 3/4 IN. LG		EA	2	*	*	*	*	*	*	*	*	144	2
P F		WASHER, LOCK: BRACE MTG, 3/8 IN. MS35339-46 (96906)		EA	4	*	*	*	*	*	*	*	*	144	3
X2F		BRACE, CARRIER FRAME 333611 (23382)		EA	1									144	4
P O	5305-042-6417	SCREW, CAP, HEXAGON HEAD: PUMP COVER MTG, 1/2-13 X 1 1/2 IN. LG 4093 (23382)		EA	4	*	*	*	*	*	*	*	*	144	5
P O	5310-834-7606	WASHER, LOCK: PUMP COVER MTG, 1/2 IN. MS35339-48 (96906)		EA	4	*	*	*	*	*	*	*	*	144	6
X20		COVER, PUMP 333610 (23382)		EA	1									144	7
P F	5310-020-0359	NUT, SELF-LOCKING, HEXAGON: ENGINE MTG, 5/8-18 THD SIZE 21NE108 (72962)		EA	2	*	*	*	*	*	*	*	*	144	8
P F		WASHER, FLAT: ENGINE MTG, 5/8 IN. 4405 (23382)		EA	2	*	*	*	*	*	*	*	*	144	9
P F	5305-726-2551	SCREW, CAP, HEXAGON HEAD: ENGINE MTG, 5/8-18 X 2 IN. LG 4160 (23382)		EA	2	*	*	*	*	*	*	*	*	144	10
P F		NUT, SELF-LOCKING, HEXAGON: ENGINE MTG, 1/2-20 THD SIZE 10275013 (23382)		EA	2	*	*	*	*	*	*	*	*	144	11
P F	5310-269-5938	WASHER, FLAT: ENGINE MTG, 1/2 IN. ID, 2 1/2 IN. OD, 1/8 IN. THICK 22215 (23382)		EA	2	*	*	*	*	*	*	*	*	144	12
P F	5970-404-0997	INSULATOR: ENGINE 191514 (23382)		EA	2	*	*	*	*	*	*	*	*	144	13
P F	5970-404-0996	INSULATOR: ENGINE 191499 (23382)		EA	2	*	*	*	*	*	*	*	*	144	14
P F		BOLT, SHOULDERED: ENGINE MTG 180520 (23382)		EA	2	*	*	*	*	*	*	*	*	144	15
P F	5305-042-6417	SCREW, CAP, HEXAGON HEAD: ENGINE BRACKET MTG, 1/2-13 X 1 1/2 IN. LONG MS90725-113 (96906)		EA	8	*	*	*	*	*	*	*	*	144	16
P F		WASHER, LOCK: ENGINE BRACKET MTG, 1/2 IN. 30827 (23382)		EA	8	*	*	*	*	*	*	*	*	144	17
X2F		BRACKET, ENGINE: REAR MTG 330683 (23382)		EA	2									144	18
P F	5310-020-0359	NUT, SELF-LOCKING, HEXAGON: TRANSMISSION MTG, 5/8-18 THD SIZE 21NE108 (72962)		EA	2	*	*	*	*	*	*	*	*	144	19
P F		WASHER, FLAT: TRANSMISSION MTG, 5/8 IN. 4405 (23382)		EA	2	*	*	*	*	*	*	*	*	144	20
P F	5970-404-0997	INSULATOR: REBOUND 191514 (23382)		EA	2	*	*	*	*	*	*	*	*	144	21

(1) SMR CODE	(2) FEDERAL STOCK NUMBER	(3) DESCRIPTION REF NUMBER & MFR CODE	USABLE ON CODE	(4) UNIT OF MEAS	(5) QTY INC IN UNIT	(6) 30-DAY OS MAINT ALLOWANCE (a) 1-20	(b) 21-50	(c) 51-100	(7) 30-DAY GS MAINT ALLOWANCE (a) 1-20	(b) 21-50	(c) 51-100	(8) 1-YR ALW PER 100 EQUIP CNTGY	(9) DEPOT MAINT ALW PER 100 EQUIP	(10) ILLUSTRATION (a) FIG. NO.	(b) ITEM NO.
P F	5305-726-2553	SCREW, CAP, HEXAGON HEAD: TRANSMISSION MTG, 5/8-18 X 1 3/4 IN. LG		EA	2	*	*	*	*	*	*	*	*	144	22
P F	5305-206-3518	SCREW, CAP, HEXAGON HEAD: TRANSMISSION MTG, 1/2-13 X 1 1/4 IN. LG		EA	12	*	*	*	*	*	*	*	*	144	23
P F	5310-834-7606	WASHER, LOCK: TRANSMISSION MTG, 1/2 IN. MS35340-48 (96906)		EA	12	*	*	*	*	*	*	*	*	144	24
X2F		BRACKET, MOUNTING: TRANSMISSION 330684 (23382)		EA	2									144	25
P F		NUT, SELF-LOCKING, HEXAGON: TRANSFER MTG, 1/2-20 THD SIZE 29E801 (72962)		EA	3	*	*	*	*	*	*	*	*	144	26
P F	5970-404-0997	INSULATOR: LOWER 191514 (23382)		EA	3	*	*	*	*	*	*	*	*	144	27
P F	5970-404-0996	INSULATOR: UPPER 191499 (23382)		EA	3	*	*	*	*	*	*	*	*	144	28
X2F		SLEEVE, INSULATOR 702333 (23382)		EA	3									144	29
P F		WASHER, FLAT: INSULATOR, 1/2 IN. 6489 (23382)		EA	3	*	*	*	*	*	*	*	*	144	30
P F	5305-716-8165	SCREW, CAP, HEXAGON HEAD: TRANSFER MTG, 1/2-20 X 3 1/2 IN. LG MS90726-123 (96906)		EA	3	*	*	*	*	*	*	*	*	144	31
P F		SCREW, CAP, HEXAGON HEAD: TRANSFER BRACKET, 5/8-11 X 1 1/2 IN. LG 4676 (23382)		EA	8	*	*	*	*	*	*	*	*	144	32
P F	5310-820-6653	WASHER, LOCK: TRANSFER BRACKET, 5/8 IN. MS35338-50 (96906)		EA	8	*	*	*	*	*	*	*	*	144	33
X2F		BRACKET, TRANSFER: LEFT HAND 332956 (23382)		EA	1									144	34
X2F		BRACKET, TRANSFER: RIGHT HAND 352955 (23382)		EA	1									144	35
P F		NUT, LOCK: PIVOT SHAFT H645 (78138)		EA	2	*	*	*	*	*	*	*	*	144	36
X2F		SPACER: PIVOT SHAFT 328937 (23382)		EA	2									144	37
P F		NUT, PLAIN, HEXAGON: BEARING CAP, 1-12 THD SIZE 164417 (23382)		EA	4	*	*	*	*	*	*	*	*	144	38
P F		WASHER, LOCK: BEARING CAP, 1 IN. 4310 (23382)		EA	4	*	*	*	*	*	*	*	*	144	39
P F		SCREW, CAP, HEXAGON HEAD: BEARING CAP, 1-12 X 5 1/2 IN. LG 165778 (23382)		EA	4	*	*	*	*	*	*	*	*	144	40
X2F		CAP, BEARING BLOCK 330676 (23382)		EA	2									144	41
P F		WASHER, FLAT: PIVOT SHAFT 125840 (23382)		EA	2	*	*	*	*	*	*	*	*	144	42
P F		SHAFT, PIVOT 330677 (23382)		EA	1	*	*	*	*	*	*	*	*	144	43
P O	4730-050-4208	FITTING, LUBRICATION: PIVOT FRAME MS15003-1 (23382)		EA	2	*	*	*	*	*	*	*	*	144	44
X2F		FRAME, PIVOT: REAR AXLE 330840 (23382)		EA	1									144	45

(1) SMR CODE	(2) FEDERAL STOCK NUMBER	(3) DESCRIPTION REF NUMBER & MFR CODE	USABLE ON CODE	(4) UNIT OF MEAS	(5) QTY INC IN UNIT	(6) 30-DAY OS MAINT ALLOWANCE (a) 1-20	(b) 21-50	(c) 51-100	(7) 30-DAY GS MAINT ALLOWANCE (a) 1-20	(b) 21-50	(c) 51-100	(8) 1-YR ALW PER 100 EQUIP CNTGY	(9) DEPOT MAINT ALW PER 100 EQUIP	(10) ILLUSTRATION (a) FIG. NO.	(b) ITEM NO.
P O		FITTING, LUBRICATION: PUSH ARM 57026 (23382)		EA	2	*	*	*	*	*	*	*	*	144	46
P F	5310-531-1194	NUT, PLAIN, HEXAGON: STOP BLOCK 3/8-24 THD SIZE		EA	2	*	*	*	*	*	*	*	*	144	47
P F	5310-018-7123	WASHER, LOCK: STOP BLOCK, 3/8 IN. 4313 (23382)		EA	2	*	*	*	*	*	*	*	*	144	48
P F	5305-269-2805	SCREW, CAP, HEXAGON HEAD: STOP BLOCK, 3/8-24 X 1 1/4 IN. LG MS90726-62 (96906)		EA	2	*	*	*	*	*	*	*	*	144	49
P F	5305-269-3245	SCREW, CAP, HEXAGON HEAD: PITMAN STOP BLOCK, 3/8-24 X 2 3/4 IN. LG		EA	2	*	*	*	*	*	*	*	*	144	50
P F	5305-269-2808	SCREW, CAP, HEXAGON HEAD: PITMAN STOP BLOCK, 3/8-24 X 1 3/4 IN. LG		EA	2	*	*	*	*	*	*	*	*	144	51
P F	5310-018-7123	WASHER, LOCK: PITMAN STOP BLOCK, 3/8 IN. 4313 (23382)		EA	6	*	*	*	*	*	*	*	*	144	52
X2F		STOP, PITMAN ARM 314912 (23382)		EA	1									144	53
X2F		BLOCK, STOP: STEERING ARM 305870 (23382)		EA	2									144	54
P F	5365-152-0184	SHIM, STEERING ARM 305871 (23382)		EA	5	*	*	*	*	*	*	*	*	144	55
X2F		STOP, PITMAN ARM 332206 (23382)		EA	1									144	56
X		FRAME ASSEMBLY 357205 (23382)		EA	1									144	57
P O	6140-057-2554	BATTERY, STORAGE MS35000-3 (96906)		EA	2	*	*	*	*	*	*	*	*	144	
P O	5306-225-9089	BOLT, MACHINE: 5/16-24 X 1 IN. LG MS90726-34 (96906)		EA	16	*	*	*	*	*	*	*	*	144	
P O		NUT, PLAIN, HEXAGON: 5/16-24 THD SIZE 4202 (23382)		EA	16	*	*	*	*	*	*	*	*	144	
X20		SPREADER, STEP, TOP 333707 (23382)		EA	1									144	
X20		SPREADER, STEP 333708 (23382)		EA	1									144	
X2F		SUPPORT: TANK AND LEFT HAND FENDER WELDMENT 330680 (23382)		EA	1									144	
X2F		SUPPORT: TANK AND RIGHT HAND FENDER WELDMENT 330681 (23382)		EA	1									144	
X20		SUPPORT, TOP STEP 331233 (23382)		EA	1									144	
X20		SUPPORT, CENTER STEP 331234 (23382)		EA	1									144	
P O		WASHER, LOCK: 5/16 IN. 4318 (23382)		EA	16	*	*	*	*	*	*	*	*	144	
P O	5310-777-5399	WASHER, FLAT: 5/16 IN. 6488 (23382)		EA	12	*	*	*	*	*	*	*	*	144	
		GROUP 22 - FRONT LANDING GEAR													
P F		NUT, PLAIN, HEXAGON: AXLE MTG, 1-12 THD SIZE 164417 (23382)		EA	8	*	*	*	*	*	*	*	*	145	1

(1) MR CODE	(2) FEDERAL STOCK NUMBER	(3) DESCRIPTION REF NUMBER & MFR CODE	USABLE ON CODE	(4) UNIT OF MEAS	(5) QTY INC IN UNIT	(6) 30-DAY DS MAINT ALLOWANCE (a) 1-20	(b) 21-50	(c) 51-100	(7) 30-DAY GS MAINT ALLOWANCE (a) 1-20	(b) 21-50	(c) 51-100	(8) 1-YR ALW PER 100 EQUIP CNTGY	(9) DEPOT MAINT ALW PER 100 EQUIP	(10) ILLUS-TRATION (a) FIG. NO.	(b) ITEM NO.
F		WASHER, LOCK: AXLE MTG, 1 IN. 4320 (23382)		EA	8	*	*	*	*	*	*	*	*	145	2
F		SCREW, CAP, HEXAGON HEAD: AXLE MTG, 1-12 X 8 1/2 IN. LG 165748 (23382)		EA	8	*	*	*	*	*	*	*	*	145	3
O		TIRE		EA	4	*	*	*	*	*	*	*	*	145	4
F S	2530-721-9460	AXLE ASSEMBLY, FRONT 108207 (23382)		EA	1	*	*	*	*	*	*	*	*	145	
O	5310-880-2004	NUT, S, BALL SEAT, HEXAGON: WHEEL MTG, LEFT HAND 37892 (09386)		EA	10	*	*	*	*	*	*	*	*	145	5
O	5310-880-2005	NUT, S, BALL SEAT, HEXAGON: WHEEL MTG, RIGHT HAND MS51983-4 (96906)		EA	10	*	*	*	*	*	*	*	*	145	5
O		STEM, VALVE TRJ670 (53477)		EA	2	*	*	*	*	*	*	*	*	145	6
O	2530-401-3594	WHEEL, PNEUMATIC 514555398 (22337)		EA	2	*	*	*	*	*	*	*	*	145	7
O	2530-781-1902	RING, LOCKING LR25EM (22337)		EA	2	*	*	*	*	*	*	*	*	145	8
O	3805-072-7219	RING, BEAD SEAT BB425EM (22337)		EA	2	*	*	*	*	*	*	*	*	145	9
O	5330-043-3988	PACKING, PREFORMED: WHEEL OR325EM (22337)		EA	2	*	*	*	*	*	*	*	*	145	10
O	2530-249-4250	RING, SIDE S2525EM (22337)		EA	4	*	*	*	*	*	*	*	*	145	11
1		RIM B1925EMT4-12G (22337)		EA	2									145	12
O		ACTUATOR, SAFETY 282775 (06853)		EA	2	*	*	*	*	*	*	*	*	146	1
O	5310-431-4320	NUT, PLAIN, HEXAGON: MTG AND ROD LOCK, 5/8-18 THD SIZE 204781 (06853)		EA	6	*	*	*	*	*	*	*	*	146	2
O		WASHER, LOCK: ACTUATOR MTG, 5/8 IN. 202986 (06853)		EA	4	*	*	*	*	*	*	*	*	146	3
O	5310-823-8803	WASHER, FLAT: ACTUATOR MTG, 5/8 IN.		EA	4	*	*	*	*	*	*	*	*	146	4
X20	5340-855-3255	YOKE, PUSH ROD 228790 (06853)		EA	2									146	5
O		PIN, COTTER: ACTUATOR CLEVIS PIN 203019 (06853)		EA	2	*	*	*	*	*	*	*	*	146	6
O		PIN, CLEVIS: ACTUATOR 200054 (06853)		EA	2	*	*	*	*	*	*	*	*	146	7
O		RING ASSEMBLY, CLAMPING: EMERGENCY 282826 (06853)		EA	2	*	*	*	*	*	*	*	*	146	8
O	5310-022-5853	NUT, PLAIN, HEXAGON: CLAMP, 5/16-24 THD SIZE		EA	4	*	*	*	*	*	*	*	*	146	9
O		BOLT, CARRIAGE: 5/16-24 X 1 1/2 IN. LG 242386 (06853)		EA	4	*	*	*	*	*	*	*	*	146	10
X1		CLAMPING RING 246926 (06853)		EA	2									146	11
X20		PLATE, COMPRESSION: PRESSURE AUXILIARY 282432 (06853)		EA	2									146	12

(1) SMR CODE	(2) FEDERAL STOCK NUMBER	(3) DESCRIPTION REF NUMBER & MFR CODE	USABLE ON CODE	(4) UNIT OF MEAS	(5) QTY INC IN UNIT	(6) 30-DAY OS MAINT ALLOWANCE (a) 1-20	(b) 21-50	(c) 51-100	(7) 30-DAY GS MAINT ALLOWANCE (a) 1-20	(b) 21-50	(c) 51-100	(8) 1-YR ALW PER 100 EQUIP CNTGY	(9) DEPOT MAINT ALW PER 100 EQUIP	(10) ILLUSTRATION (a) FIG. NO.	(b) ITEM NO.
P O		DIAPHRAGM AUXILIARY 246675 (06853)		EA	2	*	*	*	*	*	*	*	*	146	13
P O		SEPARATOR, DIAPHRAGM 246363 (06853)		EA	2	*	*	*	*	*	*	*	*	146	14
P O		RING ASSEMBLY, CLAMPING 282827 (06853)		EA	2	*	*	*	*	*	*	*	*	146	15
P O	5310-022-5853	NUT, PLAIN, HEXAGON: CLAMP, 5/16-24 THD SIZE		EA	4	*	*	*	*	*	*	*	*	146	16
P O		BOLT, CARRIAGE: CLAMP, 5/16-24 X 1 1/2 IN. LG 237886 (06853)		EA	4	*	*	*	*	*	*	*	*	146	17
X1		CLAMPING RING 246927 (06853)		EA	2									146	18
P O		PLATE, PRESSURE, SERVICE 242018 (06853)		EA	2	*	*	*	*	*	*	*	*	146	19
P O		DIAPHRAGN, SERVICE 246371 (06853)		EA	2	*	*	*	*	*	*	*	*	146	20
X20		ROD ASSEMBLY, PUSH 278580 (06853)		EA	2									146	21
P O		SPRING, RETURN 243384 (06853)		EA	2	*	*	*	*	*	*	*	*	146	22
X20		PLATE, COMPRESSION: NONPRESSURE 225948 (06853)		EA	2									146	23
P O	5305-782-9495	SCREW, CAP, HEXAGON HEAD: BRACKET MTG, 1/2-13 X 1 1/4 IN. LG MS90725-111 (96906)		EA	8	*	*	*	*	*	*	*	*	146	24
P O	5310-834-7606	WASHER, LOCK: BRACKET MTG, 1/2 IN. MS35340-48 (96906)		EA	8	*	*	*	*	*	*	*	*	146	25
X20		BRACKET, BRAKE CHAMBER: LEFT HAND 759337 (23382)		EA	1									146	26
X20		BRACKET, BRAKE CHAMBER: RIGHT HAND 759336 (23382)		EA	1									146	26
P O	5310-282-5699	NUT, SELF-LOCKING: HUB MTG 44672E9 (09386)		EA	20	*	*	*	*	*	*	*	*	147	1
P O	5307-486-3386	STUD, SHOULDERED: WHEEL, RIGHT HAND 758753 (23382)		EA	10	*	*	*	*	*	*	*	*	147	2
P O	5307-486-3385	STUD,SHOULDERED: WHEEL, LEFT HAND 758754 (23382)		EA	10	*	*	*	*	*	*	*	*	147	2
P O	4730-842-2191	PLUG, PIPE, MAGNETIC: PLANETARY HOUSING DRAIN, 1/2 IN. NPT 502FQ (36540)		EA	2	*	*	*	*	*	*	*	*	147	3
P O	2805-593-1966	PLUG, MAGNETIC: PLANETARY HOUSING, OIL LEVEL, 3/4 IN. NPT 503PQ (36540)		EA	2	*	*	*	*	*	*	*	*	147	4
P O	2590-693-4120	FITTING, RELIEF: OUTER 47640 (70270)		EA	2	*	*	*	*	*	*	*	*	147	5
P F	5305-710-4192	SCREW, CAP, HEXAGON HEAD: PLANETARY COVER MTG, 7/16-20 X 1 1/4 IN. LG MS90726-87 (96906)		EA	12	*	*	*	*	*	*	*	*	147	6
P F	5310-209-0965	WASHER, LOCK: PLANETARY COVER MTG, 7/16 IN. MS35338-47 (96906)		EA	12	*	*	*	*	*	*	*	*	147	7

(1) SMR CODE	(2) FEDERAL STOCK NUMBER	(3) DESCRIPTION REF NUMBER & MFR CODE	USABLE ON CODE	(4) UNIT OF MEAS	(5) QTY INC IN UNIT	(6) 30-DAY OS MAINT ALLOWANCE (a) 1-20	(b) 21-50	(c) 51-100	(7) 30-DAY GS MAINT ALLOWANCE (a) 1-20	(b) 21-50	(c) 51-100	(8) 1-YR ALW PER 100 EQUIP CNTGY	(9) DEPOT MAINT ALW PER 100 EQUIP	(10) ILLUSTRATION (a) FIG. NO.	(b) ITEM NO.
P F	5330-485-0896	GASKET: COVER 758162 (23382)		EA	2	*	*	*	*	*	*	*	*	147	8
P F		BUTTON, THRUST 757305 (23382)		EA	2	*	*	*	*	*	*	*	*	147	9
X2F		COVER, PLANETARY HOUSING 757874 (23382)		EA	2									147	10
P F	5340-530-6790	RING, RETAINING: SUN GEAR MS16624-231 (96906)		EA	2	*	*	*	*	*	*	*	*	147	11
P F	3020-484-3516	GEAR, SUN 757868 (23382)		EA	2	*	*	*	*	*	*	*	*	147	12
P F	3120-485-0817	WASHER, THRUST: SUN GEAR 757873 (23382)		EA	2	*	*	*	*	*	*	*	*	147	13
P F	5305-617-8194	SCREW, CAP, HEXAGON HEAD: SPIDER PULL HOLE PLUG, 1/2-20 X 1/2 IN. LG MS90726-104 (96906)		EA	4	*	*	*	*	*	*	*	*	147	14
P F	5305-719-5238	SCREW, CAP, HEXAGON HEAD: SPIDER MTG, 1/2-20 X 2 IN. LG MS90727-115 (96906)		EA	24	*	*	*	*	*	*	*	*	147	15
P F	5310-834-7606	WASHER, LOCK: SPIDER MTG, 1/2 IN. MS35340-48 (96906)		EA	28	*	*	*	*	*	*	*	*	147	16
P F	3110-100-6151	BALL, LOCK, ADJUSTING NUT: GEAR PIN, 1/4 IN. MS19059-49 (96906)		EA	6	*	*	*	*	*	*	*	*	147	17
P F	5315-760-7414	PIN, STRAIGNT, HEADLESS: PLANETARY GEAR 758710 (23382)		EA	6	*	*	*	*	*	*	*	*	147	18
P F	3120-464-7268	WASHER, THRUST: PLANETARY GEAR 757871 (23382)		EA	12	*	*	*	*	*	*	*	*	147	19
P F	3110-869-4184	ASSEMBLY, JOURNAL: PLANETARY GEAR WJ202616 (60380)		EA	12	*	*	*	*	*	*	*	*	147	20
P F	5365-245-3427	SPACER, BEARING 758705 (23382)		EA	6	*	*	*	*	*	*	*	*	147	21
P F	3020-484-0589	GEAR, PLANET 758711 (23382)		EA	6	*	*	*	*	*	*	*	*	147	22
P F	2520-477-5832	SPIDER, PLANETARY 758712 (23382)		EA	2	*	*	*	*	*	*	*	*	147	23
P F	5315-485-0958	KEY, LOCKNUT 758708 (23382)		EA	4	*	*	*	*	*	*	*	*	147	24
P F	2520-477-5833	NUT, SKEIN LOCK 757863 (23382)		EA	2	*	*	*	*	*	*	*	*	147	25
P F	3110-289-6585	CONE, TAPERED ROLLER BEARING: HUB, OUTER 48290 (08162)		EA	2	*	*	*	*	*	*	*	*	147	26
P F		LOCKWIRE, STEEL: HUB RETAINER 1000520 (23382)		FT	V	*	*	*	*	*	*	*	*	147	27
P F		SCREW, CAP, HEXAGON HEAD: HUB RETAINER, 7/16-20 X 1 IN. LG 165679 (23382)		EA	16	*	*	*	*	*	*	*	*	147	28
P F		RETAINER, RING GEAR 757297 (23382)		EA	8	*	*	*	*	*	*	*	*	147	29
X1		RING GEAR 758892 (23382)		EA	2									147	30
P F		HUB ASSEMBLY, RING GEAR 758891 (23382)		EA	2	*	*	*	*	*	*	*	*	147	31

(1) SMR CODE	(2) FEDERAL STOCK NUMBER	(3) DESCRIPTION REF NUMBER & MFR CODE	USABLE ON CODE	(4) UNIT OF MEAS	(5) QTY INC IN UNIT	(6) 30-DAY DS MAINT ALLOWANCE (a) 1-20	(b) 21-50	(c) 51-100	(7) 30-DAY GS MAINT ALLOWANCE (a) 1-20	(b) 21-50	(c) 51-100	(8) 1-YR ALW PER 100 EQUIP CNTGY	(9) DEPOT MAINT ALW PER 100 EQUIP	(10) ILLUSTRATIO (a) FIG. NO.
X1		BUSHING 758055 (23382)		EA	2									147
X1		HUB 758889 (23382)		EA	2									147
P F		SCREW, CAP, HEXAGON HEAD: BRAKE DRUM MTG, 5/8-18 X 1.88 IN. LG 165683 (23382)		EA	16	*	*	*	*	*	*	*	*	147
P F	5310-820-6653	WASHER, LOCK: BRAKE DRUM MTG, 5/8 IN. MS35338-50 (96906)		EA	16	*	*	*	*	*	*	*	*	147
P F	2530-240-9095	DRUM, BRAKE 758884 (23382)		EA	2	*	*	*	*	*	*	*	*	147
P F		SEAL, PLAIN, ENCASED: HUB 618-750-24 (71724)		EA	2	*	*	*	*	*	*	*	*	147
P F	3110-488-3867	CONE, TAPERED ROLLER BEARING: HUB, INNER HM624749 (60038)		EA	2	*	*	*	*	*	*	*	*	147
P F	3110-488-3866	CUP, TAPERED ROLLER BEARING: HUB, INNER HM624710 (60038)		EA	2	*	*	*	*	*	*	*	*	147
P F	3110-278-7548	CUP, TAPERED ROLLER BEARING: HUB, OUTER 48220 (08162)		EA	2	*	*	*	*	*	*	*	*	147
X2F		HUB, WHEEL 758697 (23382)		EA	2									147
P F	5360-450-4116	SPRING, HELICAL: SHOE RETURN 757799 (23382)		EA	2	*	*	*	*	*	*	*	*	148
P F	5340-281-6623	RING, RETAINING: SHOE MTG PIN MS16664-125 (96906)		EA	4	*	*	*	*	*	*	*	*	148
X2F		PIN, STRAIGHT, HEADLESS: SHOE MOUNTING 756413 (23382)		EA	2									148
P F	2530-420-8606	SHOE ASSEMBLY, BRAKE: RIGHT HAND 758807 (23382)		EA	2	*	*	*	*	*	*	*	*	148
X2F		ROLLER, SHOE 752379 (23382)		EA	2									148
P F	5360-176-0705	SPRING, BRAKE SHOE 756369 (23382)		EA	2	*	*	*	*	*	*	*	*	148
P F	5310-485-0941	NUT, SELF-LOCKING: LINING MTG, 1/4-28 THD SIZE 112500 (23382)		EA	32	*	*	*	*	*	*	*	*	148
P F		SCREW, SPECIAL: LINING MTG, 1/4-28 X 1 IN. LG 165771 (23382)		EA	32	*	*	*	*	*	*	*	*	148
P F	2530-485-9299	LINING, BRAKE SHOE 198971 (23382)		EA	4	*	*	*	*	*	*	*	*	148
X1		BRAKE SHOE 758809 (23382)		EA	2									148
P F	2530-420-4347	SHOE ASSEMBLY: BRAKE, LEFT HAND 758695 (23382)		EA	2	*	*	*	*	*	*	*	*	148
X2F		ROLLER, BRAKE SHOE 752379 (23382)		EA	2									148
P F	5360-176-0705	SPRING, BRAKE SHOE 756369 (23382)		EA	2	*	*	*	*	*	*	*	*	148
P F	5310-485-0941	NUT, SELF-LOCKING: LINING MTG, 1/4-28 THD SIZE 112500 (23382)		EA	32	*	*	*	*	*	*	*	*	148

(1) SMR CODE	(2) FEDERAL STOCK NUMBER	(3) DESCRIPTION REF NUMBER & MFR CODE	USABLE ON CODE	(4) UNIT OF MEAS	(5) QTY INC IN UNIT	(6) 30-DAY DS MAINT ALLOWANCE (a) 1-20	(b) 21-50	(c) 51-100	(7) 30-DAY GS MAINT ALLOWANCE (a) 1-20	(b) 21-50	(c) 51-100	(8) 1-YR ALW PER 100 EQUIP CNTGY	(9) DEPOT MAINT ALW PER 100 EQUIP	(10) ILLUSTRATION (a) FIG. NO.	(b) ITEM NO.
P F		SCREW, SPECIAL: LINING MTG, 1/4-28 X 1 IN. LG 165771 (23382)		EA	32	*	*	*	*	*	*	*	*	148	15
P F	2530-485-9299	LINING, BRAKE SHOE 198971 (23382)		EA	4	*	*	*	*	*	*	*	*	148	16
X1		BRAKE SHOE 758731 (23382)		EA	2									148	17
P O	5365-353-2461	RING, RETAINING: SLACK ADJUSTER 752389 (23382)		EA	2	*	*	*	*	*	*	*	*	148	18
P O	5310-701-4891	WASHER, FLAT: SLACK ADJUSTER SPACING 752386 (23382)		EA	2	*	*	*	*	*	*	*	*	148	19
P O		ADJUSTER, SLACK: RIGHT HAND 282054 (06853)		EA	1	*	*	*	*	*	*	*	*	148	20
P O		ADJUSTER, SLACK: LEFT HAND 282055 (06853)		EA	1	*	*	*	*	*	*	*	*	148	20
P F	2530-487-2077	CAMSHAFT: RIGHT HAND 757363 (23382)		EA	1	*	*	*	*	*	*	*	*	148	21
P F	2530-487-2084	CAMSHAFT: LEFT HAND 757364 (23382)		EA	1	*	*	*	*	*	*	*	*	148	21
P F	5310-557-8734	WASHER, CAMSHAFT 757362 (23382)		EA	2	*	*	*	*	*	*	*	*	148	22
P F	5365-760-7332	SPACER, CAMSHAFT 757361 (23382)		EA	2	*	*	*	*	*	*	*	*	148	23
P F	5330-485-0833	SEAL, PLAIN: CAMSHAFT 450394 (76680)		EA	4	*	*	*	*	*	*	*	*	148	24
P F	3120-484-1715	BUSHING, NONMETALLIC 752387 (23382)		EA	4	*	*	*	*	*	*	*	*	148	25
P F	5310-239-7751	NUT, PLAIN, HEXAGON: BRAKE SPIDER MTG, 1/2-20 THD SIZE 164325 (23382)		EA	24	*	*	*	*	*	*	*	*	148	26
P F	5310-834-7601	WASHER, LOCK: BRAKE SPIDER MTG, 1/2 IN. MS35340-48 (96906)		EA	24	*	*	*	*	*	*	*	*	148	27
X2F		SPIDER, BRAKE 757333 (23382)		EA	2									148	28
P F	2530-248-3694	SHIELD, DUST: BRAKE 757341 (23382)		EA	2	*	*	*	*	*	*	*	*	148	29
P H	3110-554-5417	BEARING, BALL: SKEIN X13L13 (43334)		EA	2				*	*	*	*	*	149	1
P H	5340-803-9972	RING, RETAINING: SKEIN SEAL MS16664-255 (96906)		EA	2				*	*	*	*	*	149	2
P H	5330-531-6465	SEAL, PLAIN, ENCASED: SKEIN 505195 (76680)		EA	2				*	*	*	*	*	149	3
P H	2520-477-5838	SKEIN, AXLE 758704 (23382)		EA	2				*	*	*	*	*	149	4
P H	5305-352-6796	SCREW, CAGE RING: AXLE 75059 (23382)		EA	16				*	*	*	*	*	149	5
X2H	3810-847-7749	RING, CAGE, DRILLED 754342 (23382)		EA	2									149	6
X2H	3810-847-7749	RING, CAGE, TAPPED 754341 (23382)		EA	2									149	7
P H	3805-483-8232	SHAFT, OUTER AXLE 758701 (23382)		EA	2				*	*	*	*	*	149	8
P H	3805-483-8234	SHAFT, INNER AXLE 758702 (23382)		EA	2				*	*	*	*	*	149	9

(1) SMR CODE	(2) FEDERAL STOCK NUMBER	(3) DESCRIPTION REF NUMBER & MFR CODE	USABLE ON CODE	(4) UNIT OF MEAS	(5) QTY INC IN UNIT	(6) 30-DAY QS MAINT ALLOWANCE (a) 1-20	(b) 21-50	(c) 51-100	(7) 30-DAY GS MAINT ALLOWANCE (a) 1-20	(b) 21-50	(c) 51-100	(8) 1-YR ALW PER 100 EQUIP CNTGY	(9) QEPOT MAINT ALW PER 100 EQUIP	(10) ILLUSTRATION (a) FIG. NO.	(b) ITEM NO.
P F		PIN, COTTER: TIE ROD, 1/16 X 1 3/4 IN. LG 5957 (23382)		EA	2	*	*	*	*	*	*	*	*	149	10
P F	2530-464-4394	TIE ROD ASSEMBLY: STEERING 756860 (23382)		EA	1	*	*	*	*	*	*	*	*	149	11
P F		CLAMP ASSEMBLY: TIE ROD L24CP8A10 (98349)		EA	2	*	*	*	*	*	*	*	*	149	12
P F	2530-483-8207	TIE ROD END, STELRING: RIGHT HAND L245V5001A15 (98349)		EA	1	*	*	*	*	*	*	*	*	149	13
P F	2530-136-8576	END ASSEMBLY, TIE ROD: LEFT HAND L245V500A16 (98349)		EA	1	*	*	*	*	*	*	*	*	149	13
X2F		ROD, TIE 754904 (23382)		EA	1									149	14
P F		STUD, PLAIN: BRAKE SPIDER MTG, 1/2-20 X 2.56 IN. LG 165534 (23382)		EA	24	*	*	*	*	*	*	*	*	149	15
P F		NUT, SELF-LOCKING, HEXAGON: STEERING ARM AND CAP MTG, 3/4-16 THD SIZE 112513 (23382)		EA	8	*	*	*	*	*	*	*	*	149	16
X2F		CAP, TOP: RIGHT HAND 759385 (23382)		EA	1									149	17
X2F	2530-248-3679	ARM ASSEMBLY, STEERING: LEFT HAND 757368 (23382)		EA	1									149	18
P F		STUD, BALL 042031 (77640)		EA	1	*	*	*	*	*	*	*	*	149	19
P F	2530-371-3320	ARM, STEERING 750781 (23382)		EA	1	*	*	*	*	*	*	*	*	149	20
P F		NUT, SELF-LOCKING, HEXAGON: TIE ROD ARM, MTG, 3/4-16 THD SIZE 112513 (23382)		EA	8	*	*	*	*	*	*	*	*	149	21
P F	5310-584-7888	WASHER, LOCK: TIE ROD ARM, MTG, 3/4 IN. 4308 (23382)		EA	8	*	*	*	*	*	*	*	*	149	22
X2F		ARM, TIE ROD: LEFT HAND 758776 (23382)		EA	1									149	23
X2F		ARM, TIE ROD: RIGHT HAND 759204 (23382)		EA	1									149	23
P F	5365-404-8393	SHIM: 0.005 IN. THK 751538 (23382)		EA	12	*	*	*	*	*	*	*	*	149	24
P F	2520-035-5373	SHIM: 0.010 IN. THK 751539 (23382)		EA	8	*	*	*	*	*	*	*	*	149	24
P F	2520-035-5374	SHIM: 0.015 IN. THK 751540 (23382)		EA	4	*	*	*	*	*	*	*	*	149	24
P F	2530-248-3680	PIN, SOCKET BEARING 758882 (23382)		EA	4	*	*	*	*	*	*	*	*	149	25
P F		FITTING, RELIEF 195376 (23382)		EA	2	*	*	*	*	*	*	*	*	149	26
P F	5307-613-8005	STUD, PLAIN: SOCKET, 3/4-16 X 3.88 IN. LG 165693 (23382)		EA	4	*	*	*	*	*	*	*	*	149	27
P F		STUD, PLAIN: SOCKET 165780 (23382)		EA	12	*	*	*	*	*	*	*	*	149	28

(1) SMR CODE	(2) FEDERAL STOCK NUMBER	(3) DESCRIPTION REF NUMBER & MFR CODE	USABLE ON CODE	(4) UNIT OF MEAS	(5) QTY INC IN UNIT	(6) 30-DAY OS MAINT ALLOWANCE (a) 1-20	(b) 21-50	(c) 51-100	(7) 30-DAY GS MAINT ALLOWANCE (a) 1-20	(b) 21-50	(c) 51-100	(8) 1-YR ALW PER 100 EQUIP CNTGY	(9) DEPOT MAINT ALW PER 100 EQUIP	(10) ILLUSTRATION (a) FIG. NO.	(b) ITEM NO.
P F		FITTING, LUBRICATION: PRESSURE RELIEF 47640 (95879)		EA	2	*	*	*	*	*	*	*	*	149	29
P H	5310-236-1336	NUT, PLAIN, HEXAGON: BALL SOCKET MTG, 3/4-16 THD SIZE 164381 (23382)		EA	16				*	*	*	*	*	149	30
P H	5310-052-6454	WASHER, LOCK: BALL SOCKET MTG, 3/4 IN. MS35340-51 (96906)		EA	16				*	*	*	*	*	149	31
P H		SCREW, CAP, HEXAGON HEAD: BALL SOCKET MTG, 3/4-16 X 2 IN. LG 165847 (23382)		EA	2				*	*	*	*	*	149	32
P H	5310-584-7888	WASHER, LOCK: BALL SOCKET MTG, 3/4 IN. 4308 (23382)		EA	2				*	*	*	*	*	149	33
P F	4730-050-4208	FITTING, LUBRICATION: BALL MS15003-1 (96906)		EA	4	*	*	*	*	*	*	*	*	149	34
P H	5306-225-9084	BOLT, MACHINE: RETAINER MTG, 5/16-24 X 1/2 IN. LG MS90726-29 (96906)		EA	20				*	*	*	*	*	149	35
P H		WASHER, LOCK: RETAINER MTG, 5/16 IN. 4318 (23382)		EA	20				*	*	*	*	*	149	36
X2H		RETAINER, SEAL 757357 (23382)		EA	2									149	37
X2H		CONNECTOR, SEAL RETAINER 758796 (23382)		EA	2									149	38
X2H	5330-498-2873	RETAINER, SEAL 757356 (23382)		EA	4									149	39
P H	3110-469-5346	CONE, TAPERED ROLLER BEARING HM903244 (60038)		EA	4				*	*	*	*	*	149	40
P H	3110-929-4083	CUP, TAPERED, ROLLER BEARING HM903210 (60038)		EA	4				*	*	*	*	*	149	41
P H		PACKING, RUBBER 195163 (23382)		EA	2				*	*	*	*	*	149	42
P H	5330-875-1985	SEAL, RUBBER 7394S (76680)		EA	2				*	*	*	*	*	149	43
P H		SEAL, PLAIN, ENCASED 450574 (76680)		EA	2				*	*	*	*	*	149	44
P H		BALL ASSEMBLY, AXLE 758997 (23382)		EA	2				*	*	*	*	*	149	45
P H	2530-248-3683	SOCKET ASSEMBLY: LEFT HAND 757332 (23382)		EA	1				*	*	*	*	*	149	46
P H	2530-248-3682	SOCKET ASSEMBLY: RIGHT HAND 757331 (23382)		EA	1				*	*	*	*	*	149	46
P H	5305-761-4227	SCREW, CAP, HEXAGON HEAD: CARRIER MTG, 1/2-20 X 1 1/4 IN. LG MS90726-111 (96906)		EA	20				*	*	*	*	*	150	1
P H	5310-834-7606	WASHER, LOCK: CARRIER MTG, 1/2 IN. MS35340-48 (96906)		EA	20				*	*	*	*	*	150	2
P H S	2530-721-9469	CARRIER ASSEMBLY: FRONT 757979 (23382)		EA	1				*	*	*	*	*	150	3
P H	5310-012-8122	NUT, PLAIN, HEXAGON: YOKE MTG, 1 1/4-12 THD SIZE 4INTE202 (72962)		EA	1				*	*	*	*	*	150	4
P H	2520-805-2001	WASHER, FLAT: YOKE MTG, 1 1/4 IN. 754011 (23382)		EA	1				*	*	*	*	*	150	5

(1) SMR CODE	(2) FEDERAL STOCK NUMBER	(3) DESCRIPTION REF NUMBER & MFR CODE	USABLE ON CODE	(4) UNIT OF MEAS	(5) QTY INC IN UNIT	(6) 30-DAY DS MAINT ALLOWANCE (a) 1-20	(b) 21-50	(c) 51-100	(7) 30-DAY GS MAINT ALLOWANCE (a) 1-20	(b) 21-50	(c) 51-100	(8) 1-YR ALW PER 100 EQUIP CNTGY	(9) DEPOT MAINT ALW PER 100 EQUIP	(10) ILLUSTRATION (a) FIG. NO.	(b) ITEM NO.
P H	5305-724-5913	SCREW, CAP, HEXAGON HEAD: SEAL RETAINER MTG, 5/8-11 X 2 1/2 IN. LG MS90725-166 (96906)		EA	6				*	*	*	*	*	150	6
P H	5310-820-6653	WASHER, LOCK: SEAL RETAINER MTG, 5/8 IN. MS35338-50 (96906)		EA	6				*	*	*	*	*	150	7
P H	5330-599-6464	SEAL, PLAIN, ENCASED 374AMM224 (80201)		EA	1				*	*	*	*	*	150	8
X2H		RETAINER, SEAL 757938 (23382)		EA	1									150	9
P H		GASKET: PINION BEARING COVER 759004 (23382)		EA	1				*	*	*	*	*	150	10
P H	3110-013-7758	CONE, TAPERED ROLLER BEARING 72200C (60038)		EA	2				*	*	*	*	*	150	11
P H	3110-100-0615	CUP, TAPERED ROLLER BEARING 72487 (60038)		EA	2				*	*	*	*	*	150	12
P H		SPACER, PINION BEARING 755438 (23382)		EA	1				*	*	*	*	*	150	13
X2H		RETAINER, BEARING 757826 (23382)		EA	1									150	14
P H	3110-477-6776	SHIM: PINION SHAFT BEARING RETAINER, 0.005 IN. THK 757827 (23382)		EA	4				*	*	*	*	*	150	15
P H	3110-477-6775	SHIM: PINION SHAFT BEARING RETAINER, 0.010 IN. THK 757828 (23382)		EA	4				*	*	*	*	*	150	16
P H	3110-494-2428	BEARING, ROLLER MU3206M (08162)		EA	1				*	*	*	*	*	150	17
P O		PLUG, PIPE: FILLER, 1 IN. NPT 4504 (23382)		EA	1	*	*	*	*	*	*	*	*	150	18
P O		FITTING, BLEEDER FC6446 (63477)		EA	1	*	*	*	*	*	*	*	*	150	19
P O	2520-821-9439	ADAPTER, BLEEDER FITTING 804019 (23382)		EA	1	*	*	*	*	*	*	*	*	150	20
P H	5310-851-2674	NUT, PLAIN, HEXAGON: OIL SCOOP, 1/4-20 THD SIZE MS35691-1 (96906)		EA	1				*	*	*	*	*	150	21
P H		SETSCREW: 1/4-20 X 5/8 IN. LG 4226 (23382)		EA	1				*	*	*	*	*	150	22
P O	4730-187-4210	PLUG, PIPE: SCOOP ACCESS, 3/4 IN. NPT WWP471 (81348)		EA	1	*	*	*	*	*	*	*	*	150	23
P H	2530-869-1521	SCOOP, OIL 756539 (23382)		EA	1				*	*	*	*	*	150	24
P H		TUBE ASSEMBLY 757925 (23382)		EA	2				*	*	*	*	*	150	25
P H	4730-187-0840	ADAPTER, STRAIGHT, TUBE 4-37-2 (92985)		EA	2				*	*	*	*	*	150	26
P H	4730-936-4828	ELBOW, MALE: 1/4 X 1/8 IN. 90 DEG 4-37-6 (92985)		EA	2				*	*	*	*	*	150	27
P H		CYLINDER ASSEMBLY 757920 (23382)		EA	1				*	*	*	*	*	150	28
X2H		RETAINER, PACKING 8-246N300-9 (45681)		EA	1									150	29

(1) SMR CODE	(2) FEDERAL STOCK NUMBER	(3) DESCRIPTION REF NUMBER & MFR CODE	USABLE ON CODE	(4) UNIT OF MEAS	(5) QTY INC IN UNIT	(6) 30-DAY DS MAINT ALLOWANCE (a) 1-20	(b) 21-50	(c) 51-100	(7) 30-DAY GS MAINT ALLOWANCE (a) 1-20	(b) 21-50	(c) 51-100	(8) 1-YR ALW PER 100 EQUIP CNTGY	(9) DEPOT MAINT ALW PER 100 EQUIP	(10) ILLUSTRATION (a) FIG. NO.	(b) ITEM NO.
P H	5330-814-0794	PACKING, PREFORMED: CYLINDER NUT 2-246 (45681)		EA	1				*	*	*	*	*	150	30
X1		NUT 757921 (23382)		EA	1									150	31
P H	5330-817-9034	PACKING, PREFORMED 194607 (23382)		EA	1				*	*	*	*	*	150	32
X2H		RETAINER, PACKING 8-230N300-9 (45681)		EA	1									150	33
X2H		PIN, STRAIGHT, HEADLESS, 1/4 IN. DIA, 3/4 IN. LG 122-614 (23382)		EA	1									150	34
X1		PISTON 757922 (23382)		EA	1									150	35
P H	3110-799-9726	BEARING, NEEDLE, THRUST NTA4860 (60380)		EA	1				*	*	*	*	*	150	36
X2H		SPACER, LOCKOUT 757923 (23382)		EA	1									150	37
P H	2520-889-5628	DISK, SOLID, PLAIN, OPPOSING 753231 (23382)		EA	16				*	*	*	*	*	150	38
P H	2520-889-5627	DISK, SOLID, PLAIN, FRICTION 753230 (23382)		EA	17				*	*	*	*	*	150	39
X2H		SPACER, DIFFERENTIAL LOCKOUT 757924 (23382)		EA	1									150	40
P H	5305-984-3688	SCREW, CAP, HEXAGON HEAD: 3/8-16 X 5/8 IN. LG MS35206-308 (96906)		EA	2				*	*	*	*	*	150	41
P H		SCREW, CAP, SOCKET HEAD: LOCK, 1/4-20 X 1/2 IN. LG 165154 (23382)		EA	2				*	*	*	*	*	150	42
P H		LOCK, ADJUSTING 757313 (23382)		EA	1				*	*	*	*	*	150	43
P H		LOCK, ADJUSTING: DIFFERENTIAL BEARING 757926 (23382)		EA	1				*	*	*	*	*	150	44
P H	5365-241-6905	LOCKNUT, BEARING 757833 (23382)		EA	1				*	*	*	*	*	150	45
P H	5365-236-3822	LOCKNUT, BEARING 757834 (23382)		EA	1				*	*	*	*	*	150	46
P H	3110-101-1796	CUP, TAPERED ROLLER BEARING 48320 (60038)		EA	1				*	*	*	*	*	150	47
P H	3110-198-2949	CONE, TAPERED ROLLER BEARING 48393 (60038)		EA	1				*	*	*	*	*	150	48
P H	3110-100-0594	CUP, TAPERED ROLLER BEARING 52618 (60038)		EA	1				*	*	*	*	*	150	49
P H	3110-100-3621	CONE, TAPERED ROLLER BEARING 52400 (60038)		EA	1				*	*	*	*	*	150	50
X2H		CARRIER, MACHINERY ASSEMBLY 758145 (23382)		EA	1									150	51
P H		SCREW, CAP, HEXAGON HEAD: 3/4-10 X 4 IN. LG 165732 (23382)		EA	4				*	*	*	*	*	150	52
X1		CAP 757831 (23382)		EA	1									150	53
X1		CAP 757832 (23382)		EA	1									150	54

(1) SMR CODE	(2) FEDERAL STOCK NUMBER	(3) DESCRIPTION REF NUMBER & MFR CODE	USABLE ON CODE	(4) UNIT OF MEAS	(5) QTY INC IN UNIT	(6) 30-DAY DS MAINT ALLOWANCE (a) 1-20	(b) 21-50	(c) 51-100	(7) 30-DAY GS MAINT ALLOWANCE (a) 1-20	(b) 21-50	(c) 51-100	(8) 1-YR ALW PER 100 EQUIP CNTGY	(9) DEPOT MAINT ALW PER 100 EQUIP	(10) ILLUSTRATIO (a) FIG. NO.	(b) ITEM NO.
X1		CARRIER 758144 (23382)		EA	1									150	
P H		LOCKWIRE: 14 GAGE, 5 FT LG 1000519 (23382)		FT	V				*	*	*	*	*	150	
P H		SCREW, CAP, SOCKET HEAD: 1/2-13 X 2 3/4 IN. LG 165729 (23382)		EA	8				*	*	*	*	*	150	
P H		SCREW, CAP, SOCKET HEAD: CARRIER, 1/2-13 X 3 1/2 IN. LG 165730 (23382)		EA	4				*	*	*	*	*	150	
X2H		CASE, DIFFERENTIAL 757836 (23382)		EA	1									150	
P H	3020-844-4368	GEAR, SIDE 755834 (23382)		EA	2				*	*	*	*	*	150	
P H	5310-843-8091	WASHER, THRUST 753234 (23382)		EA	2				*	*	*	*	*	150	
P H	5310-878-8980	WASHER, THRUST: PINION GEAR 755575 (23382)		EA	4				*	*	*	*	*	150	
P H	3020-844-4369	GEAR, PINION 755835 (23382)		EA	4				*	*	*	*	*	150	
P H	3020-844-4367	SPIDER, DIFFERENTIAL 753251 (23382)		EA	1				*	*	*	*	*	150	
P H	5310-012-5653	NUT, PLAIN, HEXAGON: 1/2-20 THD SIZE FFB71TYPEA (81348)		EA	12				*	*	*	*	*	150	
P H	5305-226-7768	SCREW, CAP, HEXAGON HEAD: RING GEAR, 1/2-20 X 2 IN. LG MS90726-115 (96906)		EA	12				*	*	*	*	*	150	
X2H		CASE, DIFFERENTIAL: FLANGE SIDE 757835 (23382)		EA	1									150	
P H	3020-477-5847	GEAR SET: PINION AND RING GEAR 757200 (23382)		EA	1				*	*	*	*	*	150	
X1		PINION GEAR 757138 (23382)		EA	1									150	
X1		RING GEAR 757143 (23382)		EA	1									150	
P O	2805-593-1966	PLUG, MAGNETIC: OIL DRAIN 503PQ (36540)		EA	1	*	*	*	*	*	*	*	*	150	
P O	3830-637-2576	FITTING, PRESSURE RELIEF 47200 (95879)		EA	1	*	*	*	*	*	*	*	*	150	
P F	5310-763-8905	NUT, PLAIN, HEXAGON: STEERING STOP, 5/8-18 THD SIZE MS51968-20 (96906)		EA	2	*	*	*	*	*	*	*	*	150	
P F		SCREW, CAP, HEXAGON HEAD: STEERING STOP, 5/8-18 X 2 3/4 IN. LG 4152 (23382)		EA	2	*	*	*	*	*	*	*	*	150	
P H		STUD, PLAIN: BALL SOCKET MTG, 3/4-16 THD SIZE, 2.44 IN. LG 165519 (23382)		EA	16				*	*	*	*	*	150	
P F	5315-013-7214	PIN, COTTER: 1/8 IN. DIA, 1 3/4 IN. LG MS24665-359 (96906)		EA	2	*	*	*	*	*	*	*	*	150	
P F		NUT, PLAIN, HEXAGON: BALL STUD 6079 (23382)		EA	2	*	*	*	*	*	*	*	*	150	
P F		STUD, BALL 39095 (94431)		EA	2	*	*	*	*	*	*	*	*	150	

(1) SMR CODE	(2) FEDERAL STOCK NUMBER	(3) DESCRIPTION REF NUMBER & MFR CODE	USABLE ON CODE	(4) UNIT OF MEAS	(5) QTY INC IN UNIT	(6) 30-DAY OS MAINT ALLOWANCE (a) 1-20	(b) 21-50	(c) 51-100	(7) 30-DAY GS MAINT ALLOWANCE (a) 1-20	(b) 21-50	(c) 51-100	(8) 1-YR ALW PER 100 EQUIP CNTGY	(9) DEPOT MAINT ALW PER 100 EQUIP	(10) ILLUSTRATION (a) FIG. NO.	(b) ITEM NO.
X2H		HOUSING, AXLE 758777 (23382)		EA	1									150	79
P F	4730-741-2917	FITTING, SHUTOFF 1940 (57733)		EA	2	*	*	*	*	*	*	*	*	150	
		GROUP 23 - REAR LANDING GEAR													
P F		NUT, PLAIN, HEXAGON: AXLE MTG, 1-12 THD SIZE 164417 (23382)		EA	8	*	*	*	*	*	*	*	*	151	1
P F		WASHER, LOCK: AXLE MTG, 1 IN. 4320 (23382)		EA	8	*	*	*	*	*	*	*	*	151	2
P F		SCREW, CAP, HEXAGON HEAD: AXLE MTG, 1-12 X 1/2 IN. LG 165748 (23382)		EA	8	*	*	*	*	*	*	*	*	151	3
P O		TIRE		EA	2	*	*	*	*	*	*	*	*	151	
P F S	2530-721-9463	AXLE ASSEMBLY, REAR 108208 (23382)		EA	1	*	*	*	*	*	*	*	*	151	
P O	5310-880-2004	NUTS, BALL SEAT, HEXAGON: WHEEL MTG, LH 37892 (09386)		EA	10	*	*	*	*	*	*	*	*	151	5
P O	5310-880-2005	NUTS, BALL SEAT, HEXAGON: WHEEL MTG, RH MS51983-4 (96906)		EA	10	*	*	*	*	*	*	*	*	151	5
P O		STEM, VALVE TRJ670 (53477)		EA	2	*	*	*	*	*	*	*	*	151	6
P O	2530-401-3594	WHEEL, PNEUMATIC 514555398 (22337)		EA	2	*	*	*	*	*	*	*	*	151	7
P O	2530-781-1902	RING, LOCKING LR25EM (22337)		EA	2	*	*	*	*	*	*	*	*	151	8
P O	3805-072-7219	RING, BEAD SEAT BB425EM (22337)		EA	2	*	*	*	*	*	*	*	*	151	9
P O	5330-043-3988	PACKING, PREFORMED OR325EM (22337)		EA	2	*	*	*	*	*	*	*	*	151	10
P O	2530-249-4250	RING, SIDE S2525EM (22337)		EA	4	*	*	*	*	*	*	*	*	151	11
X1		RIM B1925EMT412G (22337)		EA	2									151	12
P O		SCREW, CAP, HEXAGON HEAD: BRACKET CLAMPING, 1/2-20 X 2 1/2 IN. LG 4077 (23382)		EA	2	*	*	*	*	*	*	*	*	152	1
P O	5310-834-7606	WASHER, LOCK: BRACKET CLAMPING, 1/2 IN. MS35340-48 (96906)		EA	2	*	*	*	*	*	*	*	*	152	2
P O	5315-298-1499	PIN, COTTER: MTG BOLT, 1/8 X 2 IN. LG MS24665-360 (96906)		EA	1	*	*	*	*	*	*	*	*	152	3
P O		NUT, SLOTTED, HEXAGON: ASSEMBLY MTG, 1 1/4-12 THD SIZE 4271 (23382)		EA	2	*	*	*	*	*	*	*	*	152	4
P O		BOLT, MACHINE, HEXAGON HEAD: ASSEMBLY MTG, 1 1/4-12 X 6 7/8 IN. LG 165283 (23382)		EA	2	*	*	*	*	*	*	*	*	152	5
P O	2530-591-7177	CHAMBER ASSEMBLY: STEER LOCK 226173 (06853)		EA	1	*	*	*	*	*	*	*	*	152	6

(1) SMR CODE	(2) FEDERAL STOCK NUMBER	(3) DESCRIPTION REF NUMBER & MFR CODE	USABLE ON CODE	(4) UNIT OF MEAS	(5) QTY INC IN UNIT	(6) 30-DAY DS MAINT ALLOWANCE (a) 1-20	(b) 21-50	(c) 51-100	(7) 30-DAY GS MAINT ALLOWANCE (a) 1-20	(b) 21-50	(c) 51-100	(8) 1-YR ALW PER 100 EQUIP CNTGY	(9) DEPOT MAINT ALW PER 100 EQUIP	(10) ILLUSTRATION (a) FIG. NO.	(b) ITEM NO.
X20		NUT, LOCK: YOKE, 1/2-20 THD SIZE 201438 (06853)		EA	1									152	7
P O	5310-484-6189	NUT, PLAIN, HEXAGON: CHAMBER MTG, 7/16-20 THD SIZE 214526 (06853)		EA	2	*	*	*	*	*	*	*	*	152	8
P O	5310-209-6074	WASHER, LOCK: CHAMBER MTG, 7/16 IN.		EA	2	*	*	*	*	*	*	*	*	152	9
P O	4730-012-7951	PLUG, PIPE: PRESSURE PLATE, 1/4 IN. NPT 230111 (06853)		EA	1	*	*	*	*	*	*	*	*	152	10
P O		RING ASSEMBLY, CLAMPING 228280 (06853)		EA	1	*	*	*	*	*	*	*	*	152	11
P O	5310-022-5853	NUT, PLAIN, HEXAGON: CLAMP RING, 5/16-24 THD SIZE		EA	2	*	*	*	*	*	*	*	*	152	12
P O		BOLT, CARRIAGE: CLAMP RING, 5/16-24 X 1 1/2 IN. LG 242386 (06853)		EA	2	*	*	*	*	*	*	*	*	152	13
P O		RING, CLAMP 238373 (06853)		EA	1	*	*	*	*	*	*	*	*	152	14
X20		PLATE, PRESSURE 225733 (06853)		EA	1									152	15
P O	2520-765-8902	DIAPHRAGM 234433 (06853)		EA	1	*	*	*	*	*	*	*	*	152	16
X20		ROD ASSEMBLY, PUSH 225902 (06853)		EA	1									152	17
P O		SPRING, HELICAL, COMPRESSION 234435 (06853)		EA	1	*	*	*	*	*	*	*	*	152	18
X20		PLATE, NON-PRESSURE 225943 (06853)		EA	2									152	19
P O		SPRING, HELICAL, COMPRESSION: YOKE 97033 (23382)		EA	2	*	*	*	*	*	*	*	*	152	20
X20		YOKE AND PIN ASSEMBLY 757129 (23382)		EA	2									152	2
X20		BRACKET: AIR CHAMBER MTG 324805 (23382)		EA	2									152	2
X20		ACTUATOR, SAFETY 10130488 (23382)		EA	1									153	
P O	2530-815-3119	CHAMBER, VERTICAL: LH 280504 (06853) (PARTS SAME AS P/N 280505 (06853) EXCEPT WHERE ANNOTATED)		EA	1	*	*	*	*	*	*	*	*	153	
P O	2530-815-3120	CHAMBER, BRAKE: RH 280505 (06853)		EA	1	*	*	*	*	*	*	*	*	153	
P O	5310-431-4320	NUT, PLAIN, HEXAGON: BRAKE CHAMBER, 5/8-18 THD SIZE 204781 (06853)		EA	4	*	*	*	*	*	*	*	*	153	
P O		WASHER, LOCK: CHAMBER MTG, 5/8 IN. 202986 (06853)		EA	4	*	*	*	*	*	*	*	*	153	
P O	5310-823-8803	WASHER, FLAT: BRAKE CHAMBER, 5/8 IN.		EA	4	*	*	*	*	*	*	*	*	153	
P O		YOKE, BRAKE 10130498 (23382)		EA	1	*	*	*	*	*	*	*	*	153	

(1) SMR CODE	(2) FEDERAL STOCK NUMBER	(3) DESCRIPTION REF NUMBER & MFR CODE	USABLE ON CODE	(4) UNIT OF MEAS	(5) QTY INC IN UNIT	(6) 30-DAY DS MAINT ALLOWANCE (a) 1-20	(b) 21-50	(c) 51-100	(7) 30-DAY GS MAINT ALLOWANCE (a) 1-20	(b) 21-50	(c) 51-100	(8) 1-YR ALW PER 100 EQUIP CNTGY	(9) DEPOT MAINT ALW PER 100 EQUIP	(10) ILLUSTRATION (a) FIG. NO.	(b) ITEM NO.
P 0	5310-431-4320	NUT, PLAIN, HEXAGON: BRAKE CHAMBER PUSH ROD, 5/8-18 THD SIZE 204781 (06853)		EA	2	*	*	*	*	*	*	*	*	153	5
P 0	2530-967-6027	BOOT, PROTECTIVE 233835 (06853)		EA	2	*	*	*	*	*	*	*	*	153	6
X20		GUARD, SPLASH 242022 (06853)		EA	2									153	7
X20		GASKET: SPLASH PLATE		EA	2									153	8
P 0		SCREW, MACHINE, ROUNDHEAD: CAP MTG, NO. 10-24 X 1/2 IN. LG 243023 (06853)		EA	8	*	*	*	*	*	*	*	*	153	9
X20		CAP ASSEMBLY 277831 (06853)		EA	2									153	10
P 0	5330-460-4570	PACKING, PREFORMED: END CAP 243682 (06853)		EA	2	*	*	*	*	*	*	*	*	153	11
P 0	5340-400-5555	SPRING, HELICAL: END CAP 242003 (06853)		EA	2	*	*	*	*	*	*	*	*	153	12
P 0		WASHER, FLAT: END CAP (NYLON) 242004 (06853)		EA	2	*	*	*	*	*	*	*	*	153	13
P 0		ROLLER, STEEL 242002 (06853)		EA	16	*	*	*	*	*	*	*	*	153	14
X20		COLLAR, PISTON 242001 (06853)		EA	2									153	15
X20		PISTON, AIR CHAMBER 242000 (06853)		EA	2									153	16
X20		PACKING, PREFORMED		EA	2									153	17
P 0	5330-455-2662	BREATHER, FELT 241996 (06853)		EA	2	*	*	*	*	*	*	*	*	153	18
P 0		RING ASSEMBLY, CLAMPING 227745 (06853)		EA	2	*	*	*	*	*	*	*	*	153	19
P 0	5310-022-5853	NUT, PLAIN, HEXAGON CLAMP RING, 5/16-24 THD SIZE		EA	4	*	*	*	*	*	*	*	*	153	20
P 0		BOLT, CARRIAGE: 5/16-24 X 1 1/2 IN. LG 237886 (06853)		EA	4	*	*	*	*	*	*	*	*	153	21
X1		RING, CLAMPING 237891 (06853)		EA	2									153	22
X20		PLATE ASSEMBLY, PRESSURE 277363 (06853)		EA	2									153	23
P 0		DIAPHRAGM, AUXILIARY 242010 (06853)		EA	2	*	*	*	*	*	*	*	*	153	24
P 0		RING ASSEMBLY, CLAMPING: 227744 (06853)		EA	2	*	*	*	*	*	*	*	*	153	25
P 0	5810-022-5853	NUT, PLAIN, HEXAGON CLAMP RING, 5/16-24 THD SIZE		EA	4	*	*	*	*	*	*	*	*	153	26
P 0		BOLT, CARRIAGE, 5/16-24 X 1 1/2 IN. LG 237886 (06853)		EA	4	*	*	*	*	*	*	*	*	153	27
X1		RING, CLAMPING 237890 (06853)		EA	2									153	28
P 0		PLATE, PRESSURE 242008 (06853)		EA	2	*	*	*	*	*	*	*	*	153	29

(1) SMR CODE	(2) FEDERAL STOCK NUMBER	(3) DESCRIPTION REF NUMBER & MFR CODE	USABLE ON CODE	(4) UNIT OF MEAS	(5) QTY INC IN UNIT	(6) 30-DAY DS MAINT ALLOWANCE (a) 1-20	(b) 21-50	(c) 51-100	(7) 30-DAY GS MAINT ALLOWANCE (a) 1-20	(b) 21-50	(c) 51-100	(8) 1-YR ALW PER 100 EQUIP CNTGY	(9) DEPOT MAINT ALW PER 100 EQUIP	(10) ILLUSTRATION (a) FIG. NO.	(b) ITEM NO.
X1		PLATE 241995 (06853)		EA	2									153	30
P 0		DIAPHRAGM, SERVICE 242009 (06853)		EA	2	*	*	*	*	*	*	*	*	153	31
P 0	5365-450-6015	RING, RETAINING 241993 (06853)		EA	2	*	*	*	*	*	*	*	*	153	32
X20		ROD, PUSH 242398 (06853)		EA	2									153	33
X20		SHAFT ASSEMBLY 277262 (06853)		EA	2									153	34
P 0		SPRING, HELICAL 242413 (06853)		EA	2	*	*	*	*	*	*	*	*	153	35
P 0	5330-420-1702	PACKING, PREFORMED 241999 (06853)		EA	2	*	*	*	*	*	*	*	*	153	36
P 0		SPRING: NON-PRESSURE PLATE 244169 (06853)		EA	2	*	*	*	*	*	*	*	*	153	37
P 0		BEARING, SLEEVE: NYLON 241997 (06853)		EA	2	*	*	*	*	*	*	*	*	153	38
X20		PLATE ASSEMBLY: NON-PRESSURE 280532 (06853) (USED ONLY ON P/N 280505 (06853))		EA	1									153	39
X20		PLATE ASSEMBLY: NON-PRESSURE 280531 (06853) (USED ONLY ON P/N 280504 (06853))		EA	1									153	39
X1		BOLT, T 244265 (06853)		EA	2									153	40
P 0		TUBE, RUBBER: SPLASH GUARD 244927 (06853)		EA	2	*	*	*	*	*	*	*	*	153	
P 0	5315-011-9120	PIN, COTTER: BRAKE YOKE		EA	2	*	*	*	*	*	*	*	*	153	41
P 0		PIN, YOKE: BRAKE CHAMBER 4474 (23382)		EA	2	*	*	*	*	*	*	*	*	153	42
P 0	5305-782-9495	SCREW, CAP, HEXAGON HEAD: BRAKE CHAMBER BRACKET MTG, 1/2-13 X 1 1/4 IN. LG MS90725-14 (96906)		EA	8	*	*	*	*	*	*	*	*	153	43
P 0	5310-834-7606	WASHER, LOCK: BRAKE CHAMBER BRACKET MTG, 1/2 IN. MS35340-48 (96906)		EA	8	*	*	*	*	*	*	*	*	153	44
X20		BRACKET, BRAKE CHAMBER: LH 758785 (23382)		EA	1									153	45
X20		BRACKET, BRAKE CHAMBER: RH 758784 (23382)		EA	1									153	45
P 0	5310-282-5699	NUT, SELF-LOCKING: HUB MTG 44672E9 (09386)		EA	20	*	*	*	*	*	*	*	*	154	1
P 0	5307-486-3386	STUD, SHOULDERED: WHEEL, RH 758753 (23382)		EA	10	*	*	*	*	*	*	*	*	154	2
P 0	5307-486-3385	STUD, WHOULDERED: WHEEL, LH 758754 (23382)		EA	10	*	*	*	*	*	*	*	*	154	2
P 0	4730-842-2191	PLUG, PIPE, MAGNETIC: PLANETARY HOUSING DRAIN, 1/2 IN. NPT 502FQ (36540)		EA	2	*	*	*	*	*	*	*	*	154	3
P 0	2805-595-1966	PLUG, MAGNETIC: PLANETARY HOUSING OIL LEVEL, 3/4 IN. NPT 503PQ (36540)		EA	2	*	*	*	*	*	*	*	*	154	4

(1) SMR CODE	(2) FEDERAL STOCK NUMBER	(3) DESCRIPTION REF NUMBER & MFR CODE	USABLE ON CODE	(4) UNIT OF MEAS	(5) QTY INC IN UNIT	(6) 30-DAY DS MAINT ALLOWANCE (a) 1-20	(b) 21-50	(c) 51-100	(7) 30-DAY GS MAINT ALLOWANCE (a) 1-20	(b) 21-50	(c) 51-100	(8) 1-YR ALW PER 100 EQUIP CNTGY	(9) DEPOT MAINT ALW PER 100 EQUIP	(10) ILLUSTRATION (a) FIG. NO.	(b) ITEM NO.
P O	2590-693-4120	FITTING, RELIEF: OUTER 47640 (70270)		EA	2	*	*	*	*	*	*	*	*	154	5
P F	5305-710-4192	SCREW, CAP, HEXAGON HEAD: PLANETARY COVER MTG, 7/16-20 X 1 1/4 IN. LG MS90726-87 (96906)		EA	12	*	*	*	*	*	*	*	*	154	6
P F	5310-209-0965	WASHER, LOCK: PLANETARY COVER MTG, 7/16 IN. MS35338-47 (96906)		EA	12	*	*	*	*	*	*	*	*	154	7
P F	5330-485-0896	GASKET: COVER 758162 (23382)		EA	2	*	*	*	*	*	*	*	*	154	8
P F		BUTTON, THRUST 757305 (23382)		EA	2	*	*	*	*	*	*	*	*	154	9
X2F		COVER, PLANETARY HOUSING 757874 (23382)		EA	2									154	10
P F	5340-530-6790	RING, RETAINING: SUN GEAR MS16624-231 (96906)		EA	2	*	*	*	*	*	*	*	*	154	11
P F	3020-484-3516	GEAR, SUN 757868 (23382)		EA	2	*	*	*	*	*	*	*	*	154	12
P F	3120-585-0817	WASHER, THRUST: SUN GEAR 757873 (23382)		EA	2	*	*	*	*	*	*	*	*	154	13
P F	5305-617-8194	SCREW, CAP, HEXAGON HEAD: SPIDER PULL HOLE PLUG, 1/2-20 X 1/2 IN. LG MS90726-104 (96906)		EA	4	*	*	*	*	*	*	*	*	154	14
P F	5305-719-5238	SCREW, CAP, HEXAGON HEAD: SPIDER MTG, 1/2-20 X 2 IN. LG MS90727-115 (96906)		EA	24	*	*	*	*	*	*	*	*	154	15
P F	5310-834-7606	WASHER, LOCK: SPIDER MTG, 1/2 IN. MS35340-48 (96906)		EA	28	*	*	*	*	*	*	*	*	154	16
P F	3110-100-6151	BALL, LOCK, ADJUSTING NUT MS19059-49 (96906)		EA	6	*	*	*	*	*	*	*	*	154	17
P F	5315-760-7414	PIN,STRAIGHT, HEADLESS: PLANETARY GEAR 758710 (23382)		EA	6	*	*	*	*	*	*	*	*	154	18
P F	3120-464-7268	WASHER, THRUST: PLANETARY GEAR 757871 (23382)		EA	12	*	*	*	*	*	*	*	*	154	19
P F	3110-869-4184	ROLLER ASSEMBLY, JOURNAL: PLANETARY GEAR WJ202616 (60380)		EA	12	*	*	*	*	*	*	*	*	154	20
P F	5365-245-3427	SPACER, BEARING 758705 (23382)		EA	6	*	*	*	*	*	*	*	*	154	21
P F	3020-484-0589	GEAR, PLANET 758711 (23382)		EA	6	*	*	*	*	*	*	*	*	154	22
P F	2520-477-5832	SPIDER, PLANETARY 758712 (23382)		EA	2	*	*	*	*	*	*	*	*	154	23
P F	5315-485-0958	KEY, LOCKNUT 758708 (23382)		EA	4	*	*	*	*	*	*	*	*	154	24
P F	2520-477-5833	NUT, SKEIN LOCK 757863 (23382)		EA	2	*	*	*	*	*	*	*	*	154	25
P F	3110-289-6585	CONE, TAPERED ROLLER BEARING: HUB, OUTER 48290 (08162)		EA	2	*	*	*	*	*	*	*	*	154	26
P F		LOCKWIRE, STEEL: HUB RETAINER 1000520 (23382)		FT	V	*	*	*	*	*	*	*	*	154	27

(1) SMR CODE	(2) FEDERAL STOCK NUMBER	(3) DESCRIPTION REF NUMBER & MFR CODE	USABLE ON CODE	(4) UNIT OF MEAS	(5) QTY INC IN UNIT	(6) 30-DAY DS MAINT ALLOWANCE (a) 1-20	(b) 21-50	(c) 51-100	(7) 30-DAY GS MAINT ALLOWANCE (a) 1-20	(b) 21-50	(c) 51-100	(8) 1-YR ALW PER 100 EQUIP CNTGY	(9) DEPOT MAINT ALW PER 100 EQUIP	(10) ILLUSTRATION (a) FIG. NO.	(b) ITEM NO.
P F		SCREW, CAP, HEXAGON HEAD: HUB RETAINER, 7/16-20 X 1 IN. LG 165679 (23382)		EA	16	*	*	*	*	*	*	*	*	154	28
P F		RETAINER, RING GEAR 757297 (23382)		EA	8	*	*	*	*	*	*	*	*	154	29
X1		RING GEAR 758892 (23382)		EA	2									154	30
P F		HUB ASSEMBLY, RING GEAR 758891 (23382)		EA	2	*	*	*	*	*	*	*	*	154	31
X1		BUSHING 758055 (23382)		EA	2									154	32
X1		HUB 758889 (23382)		EA	2									154	33
P F		SCREW, CAP, HEXAGON HEAD: BRAKE DRUM MTG, 5/8-18 X 1.88 IN. LG 165683 (23382)		EA	16	*	*	*	*	*	*	*	*	154	34
P F	5310-821-0653	WASHER, LOCK: BRAKE DRUM MTG, 5/8 IN. MS35338-50 (96906)		EA	16	*	*	*	*	*	*	*	*	154	35
P F	2530-240-9095	DRUM, BRAKE 758884 (23382)		EA	2	*	*	*	*	*	*	*	*	154	36
P F		SEAL, PLAIN, ENCASED: HUB 618-750-24 (71724)		EA	2	*	*	*	*	*	*	*	*	154	37
P F	3110-488-3867	CONE, TAPERED ROLLER BEARING: HUB INNER HM624749 (60038)		EA	2	*	*	*	*	*	*	*	*	154	38
P F	3110-488-3866	CUP, TAPERED ROLLER BEARING: HUB, INNER HM624710 (60038)		EA	2	*	*	*	*	*	*	*	*	154	39
P F	3110-278-7548	CUP, TAPERED ROLLER BEARING: HUB, OUTER 4822D (08162)		EA	2	*	*	*	*	*	*	*	*	154	40
X2F		HUB, WHEEL 758697 (23382)		EA	2									154	41
P F	5360-450-4116	SPRING, HELICAL: SHOE RETURN 757799 (23382)		EA	2	*	*	*	*	*	*	*	*	155	1
P F	5340-281-6623	RING, RETAINING: SHOE MTG PIN MS16664-125 (96906)		EA	4	*	*	*	*	*	*	*	*	155	2
X2F		PIN, STRAIGHT, HEADLESS: SHOE MTG 756413 (23382)		EA	2									155	3
P F	2530-420-8606	SHOE ASSEMBLY, BRAKE: RH 758807 (23382)		EA	2	*	*	*	*	*	*	*	*	155	4
X2F		ROLLER, SHOE 752379 (23382)		EA	1									155	5
P F	5360-176-0705	SPRING, BRAKE SHOE 756369 (23382)		EA	2	*	*	*	*	*	*	*	*	155	6
P F	5310-485-0941	NUT, SELF-LOCKING: LINING MTG, 1/4-28 THD SIZE 112500 (23382)		EA	32	*	*	*	*	*	*	*	*	155	7
P F		SCREW, SPECIAL: LINING MTG, 1/4-28 X 1 IN. LG 165771 (23382)		EA	32	*	*	*	*	*	*	*	*	155	8
P F	2530-485-9299	LINING, BRAKE SHOE 198971 (23382)		EA	4	*	*	*	*	*	*	*	*	155	9

(1) SMR CODE	(2) FEDERAL STOCK NUMBER	(3) DESCRIPTION REF NUMBER & MFR CODE	USABLE ON CODE	(4) UNIT OF MEAS	(5) QTY INC IN UNIT	(6) 30-DAY DS MAINT ALLOWANCE (a) 1-20	(b) 21-50	(c) 51-100	(7) 30-DAY GS MAINT ALLOWANCE (a) 1-20	(b) 21-50	(c) 51-100	(8) 1-YR ALW PER 100 EQUIP CNTGY	(9) DEPOT MAINT ALW PER 100 EQUIP	(10) ILLUSTRATION (a) FIG. NO.	(b) ITEM NO.
X1		BRAKE SHOE 758809 (23382)		EA	2									155	10
P F	2530-420-4347	BRAKE SHOE ASSEMBLY: LH 758695 (23382)		EA	2	*	*	*	*	*	*	*	*	155	11
X2F		ROLLER, BRAKE SHOE 752379 (23382)		EA	2									155	12
P F	5360-176-0705	SPRING, BRAKE SHOE 756369 (23382)		EA	2	*	*	*	*	*	*	*	*	155	13
P F	5310-485-0941	NUT, SELF-LOCKING: LINING MTG, 1/4-28 THD SIZE 112500 (23382)		EA	32	*	*	*	*	*	*	*	*	155	14
P F		SCREW, SPECIAL: LINING MTG, 1/4-28 X 1 IN. LG 165771 (23382)		EA	32	*	*	*	*	*	*	*	*	155	15
P F	2530-485-9299	LINING, BRAKE SHOE 198971 (23382)		EA	4	*	*	*	*	*	*	*	*	155	16
X1		BRAKE SHOE 758731 (23382)		EA	2									155	17
P O	5365-353-2461	RING, RETAINING: SLACK ADJUSTER 752389 (23382)		EA	2	*	*	*	*	*	*	*	*	155	18
P O	5310-701-4891	WASHER, FLAT: SLACK ADJUSTER SPACING 752386 (23382)		EA	2	*	*	*	*	*	*	*	*	155	19
P O		ADJUSTER, SLACK: LH 282054 (06853)		EA	1	*	*	*	*	*	*	*	*	155	20
P O		ADJUSTER, SLACK: RH 282055 (06853)		EA	1	*	*	*	*	*	*	*	*	155	20
P F	2530-487-2077	CAMSHAFT: RH 757363 (23382)		EA	1	*	*	*	*	*	*	*	*	155	21
P F	2530-487-2084	CAMSHAFT: LH 757364 (23382)		EA	1	*	*	*	*	*	*	*	*	155	21
P F	5310-557-8734	WASHER, CAMSHAFT 757362 (23382)		EA	2	*	*	*	*	*	*	*	*	155	22
P F	5365-760-7332	SPACER, CAMSHAFT 757361 (23382)		EA	2	*	*	*	*	*	*	*	*	155	23
P F	5330-485-0833	SEAL, PLAIN: CAMSHAFT 450394 (76680)		EA	4	*	*	*	*	*	*	*	*	155	24
P F	3120-484-1715	BUSHING, NON-METALLIC 752387 (23382)		EA	4	*	*	*	*	*	*	*	*	155	25
P F	5310-239-7751	NUT, PLAIN, HEXAGON: BRAKE SPIDER MTG, 1/2-20 THD SIZE 164325 (23382)		EA	24	*	*	*	*	*	*	*	*	155	26
P F	5310-834-7606	WASHER, LOCK: BRAKE SPIDER MTG, 1/2 IN. MS35340-48 (96906)		EA	24	*	*	*	*	*	*	*	*	155	27
X2F		SPIDER, BRAKE 757333 (23382)		EA	2									155	28
P F	2530-248-3694	SHIELD, DUST: BRAKE 757341 (23382)		EA	2	*	*	*	*	*	*	*	*	155	29
P H	3110-554-5417	BEARING, BALL: SKEIN X13L13 (43334)		EA	2	*	*	*	*	*	*	*	*	156	1
P H	5340-803-9972	RING, RETAINING: SKEIN SEAL MS16664-255 (96906)		EA	2				*	*	*	*	*	156	2
P H	5330-531-6465	SEAL, PLAIN, ENCASED: SKEIN 505195 (76680)		EA	2				*	*	*	*	*	156	3

(1) SMR CODE	(2) FEDERAL STOCK NUMBER	(3) DESCRIPTION REF NUMBER & MFR CODE	USABLE ON CODE	(4) UNIT OF MEAS	(5) QTY INC IN UNIT	(6) 30-DAY OS MAINT ALLOWANCE (a) 1-20	(b) 21-50	(c) 51-100	(7) 30-DAY GS MAINT ALLOWANCE (a) 1-20	(b) 21-50	(c) 51-100	(8) 1-YR ALW PER 100 EQUIP CNTGY	(9) DEPOT MAINT ALW PER 100 EQUIP	(10) ILLUSTRATION (a) FIG. NO.	(b) ITEM NO.
P H	2520-477-5838	SKEIN, AXLE 758704 (23382)		EA	2				*	*	*	*	*	156	4
P H	5305-352-6796	SCREW, CAGE RING: AXLE 75059 (23382)		EA	16				*	*	*	*	*	156	5
X2H	3810-847-7719	RING, CAGE, DRILLED 754342 (23382)		EA	2									156	6
X2H		RING, CAGE, TAPPED 754341 (23382)		EA	2									156	7
P H	3805-483-8232	SHAFT, OUTER AXLE 758701 (23382)		EA	2				*	*	*	*	*	156	8
P H	3805-483-8234	SHAFT, INNER AXLE 758702 (23382)		EA	2				*	*	*	*	*	156	9
P F		PIN, COTTER: TIE ROD, 1/16 IN. X 1 3/4 IN. LG 5957 (23382)		EA	2	*	*	*	*	*	*	*	*	156	10
P F	2530-464-4394	TIE ROD ASSEMBLY: STEERING 756860 (23382)		EA	1	*	*	*	*	*	*	*	*	156	11
P F		CLAMP ASSEMBLY: TIE ROD L24CP8A10 (98349)		EA	2	*	*	*	*	*	*	*	*	156	12
P F	2530-483-8207	TIE ROD END, STEERING, RH L24SV5001A15 (98349)		EA	1	*	*	*	*	*	*	*	*	156	13
P F	2530-136-8576	END ASSEMBLY, TIE ROD: LH L24SV500A16 (98349)		EA	1	*	*	*	*	*	*	*	*	156	13
X2F		ROD, TIE 754904 (23382)		EA	1									156	14
P F		STUD, PLAIN: SPIDER MTG, 1/2-20 X 2.56 IN. LG 165534 (23382)		EA	24	*	*	*	*	*	*	*	*	156	15
P F		NUT, SELF-LOCKING, HEXAGON: PLATE AND AXLE ARM LOCK MTG, 3/4-16 THD SIZE 112513 (23382)		EA	8	*	*	*	*	*	*	*	*	156	16
X2F		CAP, TOP: LH 759385 (23382)		EA	1									156	17
X2F		ARM, AXLE LOCK: RH 758775 (23382)		EA	1									156	18
P F		NUT, SELF-LOCKING HEXAGON: TIE ROD ARM MTG, 3/4-16 THD SIZE 112513 (23382)		EA	8	*	*	*	*	*	*	*	*	156	19
P F	5310-584-7888	WASHER, LOCK: TIE ROD ARM MTG, 3/4 IN. 4308 (23382)		EA	16	*	*	*	*	*	*	*	*	156	20
X2F		ARM, TIE ROD: RH 758776 (23382)		EA	1									156	21
X2F		ARM, TIE ROD: LH 757371 (23382)		EA	1									156	22
P F	5365-404-8393	SHIM: 0.005 IN. THK 751538 (23382)		EA	12	*	*	*	*	*	*	*	*	156	23
P F	2520-035-5373	SHIM: .010 IN. THK 751539 (23382)		EA	8	*	*	*	*	*	*	*	*	156	23
P F	2520-035-5374	SHIM: 0.015 IN. THK 751540 (23382)		EA	4	*	*	*	*	*	*	*	*	156	23
P F	2520-248-3680	PIN, SOCKET BEARING 758882 (23382)		EA	4	*	*	*	*	*	*	*	*	156	24
P F		FITTING, RELIEF 195376 (23382)		EA	2	*	*	*	*	*	*	*	*	156	25

(1) SMR CODE	(2) FEDERAL STOCK NUMBER	(3) DESCRIPTION REF NUMBER & MFR CODE	USABLE ON CODE	(4) UNIT OF MEAS	(5) QTY INC IN UNIT	(6) 30-DAY DS MAINT ALLOWANCE (a) 1-20	(b) 21-50	(c) 51-100	(7) 30-DAY GS MAINT ALLOWANCE (a) 1-20	(b) 21-50	(c) 51-100	(8) 1-YR ALW PER 100 EQUIP CNTGY	(9) DEPOT MAINT ALW PER 100 EQUIP	(10) ILLUSTRATION (a) FIG. NO.	(b) ITEM NO.
P F	5307-613-8005	STUD, PLAIN: SOCKET, 3/4-16 X 3.88 IN. LG 165693 (23382)		EA	3	*	*	*	*	*	*	*	*	156	26
P F		STUD, PLAIN: SOCKET 165780 (23382)		EA	13	*	*	*	*	*	*	*	*	156	27
P F		FITTING, LUBRICATION: PRESSURE RELIEF 47640 (95879)		EA	2	*	*	*	*	*	*	*	*	156	28
P H	5310-236-1336	NUT, PLAIN, HEXAGON: BALL SOCKET MTG, 3/4-16 THD SIZE 164381 (23382)		EA	16				*	*	*	*	*	156	29
P H	5310-052-6454	WASHER, LOCK: BALL SOCKET MTG, 3/4 IN. MS35340-51 (96906)		EA	16				*	*	*	*	*	156	30
P H		SCREW, CAP, HEXAGON HEAD: BALL SOCKET MTG, 3/4-16 X 2 IN. LG 165847 (23382)		EA	2				*	*	*	*	*	156	31
P H	5310-584-7888	WASHER, LOCK: BALL SOCKET MTG, 3/4 IN. 4308 (23382)		EA	2				*	*	*	*	*	156	32
P F	4730-050-4208	FITTING, LUBRICATION: BALL MS15003-1 (96906)		EA	4	*	*	*	*	*	*	*	*	156	33
P H	5306-225-9084	BOLT, MACHINE: RETAINER MTG, 5/16-24 X 1/2 IN. LG MS90726-29 (96906)		EA	20				*	*	*	*	*	156	34
P H		WASHER, LOCK: RETAINER MTG, 5/16 IN. 4318 (23382)		EA	20				*	*	*	*	*	156	35
X2H		RETAINER, SEAL 757357 (23382)		EA	2									156	36
X2H		CONNECTOR, SEAL RETAINER 758796 (23382)		EA	2									156	37
X2H	5330-498-2873	RETAINER, SEAL 757356 (23382)		EA	4									156	38
P H	3110-469-5346	CONE, TAPERED ROLLER BEARING HM903244 (60038)		EA	4				*	*	*	*	*	156	39
P H	3110-929-4083	CUP, TAPERED ROLLER BEARING HM903210 (60038)		EA	4				*	*	*	*	*	156	40
P H		PACKING, RUBBER 195163 (23382)		EA	2				*	*	*	*	*	156	41
P H	5330-875-1985	SEAL, RUBBER 7394S (76680)		EA	2				*	*	*	*	*	156	42
P H		SEAL, PLAIN, ENCASED 450574 (76680)		EA	2				*	*	*	*	*	156	43
P H		BALL ASSEMBLY, AXLE 758997 (23382)		EA	2				*	*	*	*	*	156	44
P H	2530-248-3683	SOCKET ASSEMBLY: LH 757332 (23382)		EA	1				*	*	*	*	*	156	45
P H	2530-248-3682	SOCKET ASSEMBLY: RH 757331 (23382)		EA	1				*	*	*	*	*	156	45
P H	5305-761-4227	SCREW, CAP, HEXAGON HEAD: CARRIER MTG, 1/2-20 X 1 1/4 IN. LG MS90726-111 (96906)		EA	20				*	*	*	*	*	157	1
P H	5310-834-7606	WASHER, LOCK: CARRIER MTG, 1/2 IN. MS35340-48 (96906)		EA	20				*	*	*	*	*	157	2

(1) SMR CODE	(2) FEDERAL STOCK NUMBER	(3) DESCRIPTION REF NUMBER & MFR CODE	USABLE ON CODE	(4) UNIT OF MEAS	(5) QTY INC IN UNIT	(6) 30-DAY DS MAINT ALLOWANCE (a) 1-20	(b) 21-50	(c) 51-100	(7) 30-DAY GS MAINT ALLOWANCE (a) 1-20	(b) 21-50	(c) 51-100	(8) 1-YR ALW PER 100 EQUIP CNTGY	(9) DEPOT MAINT ALW PER 100 EQUIP	(10) ILLUSTRATION (a) FIG. ND.	(b) ITEM NO.
P H S	2530-721-9462	CARRIER ASSEMBLY: REAR 758186 (23382)		EA	1				*	*	*	*	*	157	3
P H	5310-012-8122	NUT, PLAIN, HEXAGON: YOKE MTG, 1 1/4-12 THD SIZE 4INTE202 (72962)		EA	1				*	*	*	*	*	157	4
P H	2520-805-2001	WASHER, FLAT: YOKE MTG, 1 1/4 IN. 754011 (23382)		EA	1				*	*	*	*	*	157	5
P H	5305-724-5913	SCREW, CAP, HEXAGON HEAD: RETAINER MTG, 5/8-11 X 2 1/2 IN. LG MS90725166 (96906)		EA	6				*	*	*	*	*	157	6
P H	5310-820-6653	WASHER, LOCK: RETAINER MTG, 5/8 IN. MS35338-50 (96906)		EA	6				*	*	*	*	*	157	7
P H	5330-599-6464	SEAL, PLAIN, ENCASED 374AMM224 (80201)		EA	1				*	*	*	*	*	157	8
X2H		RETAINER, SEAL 757938 (23382)		EA	1									157	9
P H		GASKET: PINION BEARING COVER 759004 (23382)		EA	1				*	*	*	*	*	157	10
P H	3110-013-7758	CONE, TAPERED ROLLER BEARING: PINION SHAFT 72200C (60038)		EA	2				*	*	*	*	*	157	11
P H	3110-100-0615	CUP, TAPERED ROLLER BEARING: PINION SHAFT 72487 (60038)		EA	2				*	*	*	*	*	157	12
P H		SPACER, PINION: BEARING, PINION SHAFT 755438 (23382)		EA	1				*	*	*	*	*	157	13
X2H		RETAINER, BEARING: PINION SHAFT 757826 (23382)		EA	1									157	14
P H	3110-477-6776	SHIM: PINION SHAFT BEARING RETAINER, 0.005 IN. THK 757827 (23382)		EA	4				*	*	*	*	*	157	15
P H	3110-477-6775	SHIM: PINION SHAFT BEARING RETAINER, 0.010 IN. THK 757828 (23382)		EA	4				*	*	*	*	*	157	16
P H	3110-494-2428	BEARING, ROLLER: PINION SHAFT MUB5206UM (08162)		EA	1				*	*	*	*	*	157	17
P O		PLUG, PIPE: FILLER, 1 IN. NPT 4504 (23382)		EA	1	*	*	*	*	*	*	*	*	157	18
P O		FITTING, BLEEDER FC6446 (63477)		EA	1	*	*	*	*	*	*	*	*	157	19
P O	2520-821-9439	ADAPTER, BLEEDER FITTING 804019 (23382)		EA	1	*	*	*	*	*	*	*	*	157	20
P H	5310-851-2674	NUT, PLAIN, HEXAGON: OIL SCOOP, 1/4-20 THD SIZE MS35691-1 (96906)		EA	1				*	*	*	*	*	157	21
P H		SETSCREW: OIL SCOOP, 1/4-20 X 5/8 IN. LG 4226 (23382)		EA	1				*	*	*	*	*	157	22
P O	4730-187-4210	PLUG, PIPE: OIL SCOOP, 3/4 IN. NPT WWP471 (81348)		EA	1	*	*	*	*	*	*	*	*	157	23
P H	2530-869-1521	SCOOP, OIL 756539 (23382)		EA	1				*	*	*	*	*	157	24

(1) SMR CODE	(2) FEDERAL STOCK NUMBER	(3) DESCRIPTION REF NUMBER & MFR CODE	USABLE ON CODE	(4) UNIT OF MEAS	(5) QTY INC IN UNIT	(6) 30-DAY DS MAINT ALLOWANCE (a) 1-20	(b) 21-50	(c) 51-100	(7) 30-DAY GS MAINT ALLOWANCE (a) 1-20	(b) 21-50	(c) 51-100	(8) 1-YR ALW PER 100 EQUIP CNTGY	(9) DEPOT MAINT ALW PER 100 EQUIP	(10) ILLUSTRATION (a) FIG. NO.	(b) ITEM NO.
P H		TUBE ASSEMBLY 757925 (23382)		EA	2				*	*	*	*	*	157	25
P H	4730-187-0840	ADAPTER, STRAIGHT, TUBE 4-37-2 (92985)		EA	2				*	*	*	*	*	157	26
P H	4730-936-4828	ELBOW, MALE, 1/4 X 1/8 X 90 DEG 4-37-6 (92985)		EA	2				*	*	*	*	*	157	27
P H		CYLINDER ASSEMBLY 757920 (23382)		EA	1				*	*	*	*	*	157	28
X2H		RETAINER, PACKING: CYLINDER NUT 8-246N300-9 (45681)		EA	1									157	29
P H	5330-814-0794	PACKING, PREFORMED: CYLINDER NUT 2-246 (45681)		EA	1				*	*	*	*	*	157	30
X1		NUT 757921 (23382)		EA	1									157	31
P H	5330-817-9034	PACKING, PREFORMED: PISTON 194607 (23382)		EA	1				*	*	*	*	*	157	32
X2H		RETAINER, PACKING: PISTON 8-230N300-9 (45681)		EA	1									157	33
X2H		PIN, STRAIGHT, HEADLESS: PISTON, 1/4 X 3/4 IN. LG 122-614 (23382)		EA	1									157	34
X1		PISTON 757922 (23382)		EA	1									157	35
P H	3110-799-9726	BEARING, NEEDLE, THRUST: TRACT, ON LOCK NTA4860 (60380)		EA	1				*	*	*	*	*	157	36
X2H		SPACER, LOCKOUT 757923 (23382)		EA	1									157	37
P H	2520-889-5628	DISK, SOLID, PLAIN, OPPOSING 753231 (23382)		EA	16				*	*	*	*	*	157	38
P H	2 [illegible]-5627	DIS, SOLID, PLAIN, FRICTION 753230 (23382)		EA	17				*	*	*	*	*	157	39
X2H		SPACER, DIFFERENTIAL LOCKOUT 757924 (23382)		EA	1									157	40
P H	5305-984-3688	SCREW, CAP, HEXAGON HEAD: ADJUSTING LOCK, 3/8-16 X 5/8 IN. LG MS35206-308 (96906)		EA	2				*	*	*	*	*	157	41
P H		SCREW, CAP, SOCKET HEAD: LOCK, 1/4-20 X 1/2 IN. LG 165154 (23382)		EA	2				*	*	*	*	*	157	42
P H		LOCK, ADJUSTING 757313 (23382)		EA	1				*	*	*	*	*	157	43
P H		LOCK, ADJUSTING: DIFFERENTIAL BEARING 757926 (23382)		EA	1				*	*	*	*	*	157	44
P H	5365-241-6905	LOCKNUT, BEARING 757833 (23382)		EA	1				*	*	*	*	*	157	45

(1) SMR CODE	(2) FEDERAL STOCK NUMBER	(3) DESCRIPTION REF NUMBER & MFR CODE	USABLE ON CODE	(4) UNIT OF MEAS	(5) QTY INC IN UNIT	(6) 30-DAY OS MAINT ALLOWANCE (a) 1-20	(b) 21-50	(c) 51-100	(7) 30-DAY GS MAINT ALLOWANCE (a) 1-20	(b) 21-50	(c) 51-100	(8) 1-YR ALW PER 100 EQUIP CNTGY	(9) DEPOT MAINT ALW PER 100 EQUIP	(10) ILLUSTRAT (a) FIG. NO.
P H	5365-236-3822	LOCKNUT, BEARING 757834 (23382)		EA	1				*	*	*	*	*	157
P H	3110-101-1796	CUP, TAPERED ROLLER BEARING 48320 (60038)		EA	1				*	*	*	*	*	157
P H	3110-198-2949	CONE, TAPERED ROLLER BEARING 48393 (60038)		EA	1				*	*	*	*	*	157
P H	3110-100-0594	CUP, TAPERED ROLLER BEARING 52618 (60038)		EA	1				*	*	*	*	*	157
P H	3110-100-3621	CONE, TAPERED ROLLER BEARING 52400 (60038)		EA	1				*	*	*	*	*	157
X2H		CARRIER, MACHINERY ASSEMBLY 758145 (23382)		EA	1									157
P H		SCREW, CAP, HEXAGON HEAD: 3/4-10 X 4 IN. LG 165732 (23382)		EA	4				*	*	*	*	*	157
X1		CAP 757831 (23382)		EA	1									157
X1		CAP 757832 (23382)		EA	1									157
X1		CARRIER 758144 (23382)		EA	1									157
P H		LOCKWIRE, 14 GA 5 FT LG 1000519 (23382)		FT	V									157
P H		SCREW, CAP, SOCKET HEAD: CARRIER, 1/2-13 X 2 3/4 IN. LG 165729 (23382)		EA	8				*	*	*	*	*	157
P H		SCREW, CAP, SOCKET HEAD: CARRIER, 1/2-13 X 3 1/2 IN. LG 165730 (23382)		EA	12				*	*	*	*	*	157
X2H		CASE, DIFFERENTIAL 757836 (23382)		EA	1									157
P H	3020-844-4368	GEAR, SIDE 755834 (23382)		EA	2				*	*	*	*	*	157
P H	5310-843-8091	WASHER, THRUST 753234 (23382)		EA	2				*	*	*	*	*	157
P H	5310-878-8980	WASHER, THRUST: PINION GEAR 755575 (23382)		EA	4				*	*	*	*	*	157
P H	3020-844-4369	GEAR, PINION 755835 (23382)		EA	4				*	*	*	*	*	157
P H	3020-844-4367	SPIDER, DIFFERENTIAL 753251 (23382)		EA	1				*	*	*	*	*	157
P H	5310-012-5653	NUT, PLAIN, HEXAGON: RING GEAR, 1/2-20 THD SIZE FFB71TYPEA (23382)		EA	12				*	*	*	*	*	157
P H	5305-226-7768	SCREW, CAP, HEXAGON HEAD: RING GEAR, 1/2-20 X 2 IN. LG MS90726-115 (96906)		EA	12				*	*	*	*	*	157
X2H		CASE, DIFFERENTIAL: FLANGE SIDE 757835 (23382)		EA	1									157
P H		GEAR SET: PINION AND RING GEAR 757927 (23382)		EA	1				*	*	*	*	*	157

(1) SMR CODE	(2) FEDERAL STOCK NUMBER	(3) DESCRIPTION REF NUMBER & MFR CODE	USABLE ON CODE	(4) UNIT OF MEAS	(5) QTY INC IN UNIT	(6) 30-DAY DS MAINT ALLOWANCE (a) 1-20	(b) 21-50	(c) 51-100	(7) 30-DAY GS MAINT ALLOWANCE (a) 1-20	(b) 21-50	(c) 51-100	(8) 1-YR ALW PER 100 EQUIP CNTGY	(9) DEPOT MAINT ALW PER 100 EQUIP	(10) ILLUSTRATION (a) FIG. NO.	(b) ITEM NO.
X1		PINION GEAR 757928 (23382)		EA	1									157	69
X1		RING, GEAR 757929 (23382)		EA	1									157	70
P O	2805-593-1966	PLUG, MAGNETIC: OIL DRAIN 503PQ (36540)		EA	1	*	*	*	*	*	*	*	*	157	71
P O	3830-637-2576	FITTING, PRESSURE RELIEF 47200 (95879)		EA	1	*	*	*	*	*	*	*	*	157	72
P F	5310-763-8905	NUT, PLAIN, HEXAGON: STEERING STOP, 5/8-18 THD SIZE MS51968-20 (96906)		EA	2	*	*	*	*	*	*	*	*	157	73
P F		SCREW, CAP, HEXAGON HEAD: STEERING STOP, 5/8-18 X 2 3/4 IN. LG 4152 (23382)		EA	2	*	*	*	*	*	*	*	*	157	74
P H		STUD, PLAIN: BALL SOCKET MTG, 3/4-16 X 2.44 IN. LG 165519 (23382)		EA	16				*	*	*	*	*	157	75
P F	5315-013-7214	PIN, COTTER: 1/8 IN. DIA, 1 3/4 IN. LG MS24665-359 (96906)		EA	2	*	*	*	*	*	*	*	*	157	76
P F		NUT, PLAIN HEXAGON: BALL STUD 6079 (23382)		EA	2	*	*	*	*	*	*	*	*	157	77
P F		STUD, BALL 39095 (94431)		EA	2	*	*	*	*	*	*	*	*	157	78
X2H		HOUSING, AXLE 758778 (23382)		EA	1									157	79
P F	4730-741-2917	FITTING, SHUT OFF 1940 (57733)		EA	2	*	*	*	*	*	*	*	*	157	
		GROUP 24 - KITS AND SETS													
P F		CARTRIDGE KIT: HYDRAULIC PUMP 923257 (62983)		EA	1	*	*	*	*	*	*	*	*	19	
		2-SCREW												19	5
		2-PIN												19	6
		1-PLATE												19	7
		1-RING												19	8
		1-VANE KIT												19	9
		1-ROTOR												19	10
		1-PLATE												19	11
		1-PACKING												19	12
		1-RETAINER												19	13
		1-PACKING												19	14
		1-PACKING												19	15
		1-RETAINER												19	16
P F		CARTRIDGE KIT 923259 (62983)		EA	1	*	*	*	*	*	*	*	*		
		2-SCREW												19	19
		2-PIN												19	20
		1-PLATE ASSEMBLY												19	21

(1) SMR CODE	(2) FEDERAL STOCK NUMBER	(3) DESCRIPTION REF NUMBER & MFR CODE	USABLE ON CODE	(4) UNIT OF MEAS	(5) QTY INC IN UNIT	(6) 30-DAY DS MAINT ALLOWANCE (a) 1-20	(b) 21-50	(c) 51-100	(7) 30-DAY GS MAINT ALLOWANCE (a) 1-20	(b) 21-50	(c) 51-100	(8) 1-YR ALW PER 100 EQUIP CNTGY	(9) DEPOT MAINT ALW PER 100 EQUIP	(10) ILLUSTRATIO (a) FIG. NO.	(b) ITEM NO
		1-BUSHING												19	2
		1-RING												19	2
		1-VANE KIT												19	2
		1-ROTOR												19	2
		1-PLATE												19	2
		1-RETAINER												19	2
		1-PACKING												19	2
		1-PACKING												19	2
		1-RETAINER												19	3
		1-PACKING												19	3
P F		SEAL KIT: HYDRAULIC PUMP 922862 (62983)		EA	1	*	*	*	*	*	*	*	*		
		1-PACKING												19	1
		1-RETAINER												19	1
		1-PACKING												19	1
		1-PACKING												19	1
		1-RETAINER												19	1
		1-RETAINER												19	2
		1-PACKING												19	2
		1-PACKING												19	2
		1-RETAINER												19	3
		1-PACKING												19	3
		1-SEAL												19	3
		1-PACKING												19	3
P F	4820-945-9018	SEAL KIT: HYDRAULIC SYSTEM MAIN CONTROL VALVE BANK 922926 (62983)		EA	4	*	*	*	*	*	*	*	*		
		16-PACKING												23	
		4-PACKING												23	
		4-PACKING												23	
		8-PACKING												23	1
		4-PACKING												23	1
		4-RING												23	2
		8-PACKING												24	
		4-PACKING												24	1
		4-RING												24	1
		8-PACKING												25	
		4-PACKING												25	1
		4-RING												25	1
		8-PACKING												26	
		4-PACKING												26	1
		4-RING												26	1

(1) SMR CODE	(2) FEDERAL STOCK NUMBER	(3) DESCRIPTION REF NUMBER & MFR CODE	USABLE ON CODE	(4) UNIT OF MEAS	(5) QTY INC IN UNIT	(6) 30-DAY DS MAINT ALLOWANCE (a) 1-20	(b) 21-50	(c) 51-100	(7) 30-DAY GS MAINT ALLOWANCE (a) 1-20	(b) 21-50	(c) 51-100	(8) 1-YR ALW PER 100 EQUIP CNTGY	(9) DEPDT MAINT ALW PER 100 EQUIP	(10) ILLUSTRATION (a) FIG. NO.	(b) ITEM NO.
P F	5330-960-9332	RING SET: CONTROL VALVE 922906 (62983)		EA	7	*	*	*	*	*	*	*	*		
		7-RETAINER												28	5
		7-SEAL												28	6
		7-SEAL												28	7
		7-RETAINER												29	2
		7-SEAL												29	3
		7-SEAL												29	4
		7-RETAINER												30	2
		7-SEAL												30	3
		7-SEAL												30	4
		7-RETAINER												31	2
		7-SEAL												31	3
		7-SEAL												31	4
		7-SEAL												28	8
		7-PACKING												28	10
		7-PACKING												28	15
		7-PACKING												28	19
		7-RETAINER												28	20
		7-PACKING												28	21
		7-PACKING												28	22
		7-RING, BACK-UP												28	23
		7-SEAL												29	5
		7-PACKING												29	8
		7-PACKING												29	12
		7-RETAINER												29	13
		7-PACKING												29	14
		7-PACKING												29	15
		7-RING, BACK-UP												29	16
		7-SEAL												30	5
		7-PACKING												30	8
		7-PACKING												30	12
		7-RETAINER												30	13
		7-PACKING												30	14
		7-PACKING												30	15
		7-RING, BACK-UP												30	16
		7-SEAL												31	5
		7-PACKING												31	8
		7-PACKING												31	12
		7-RETAINER												31	13
		7-PACKING												31	14
		7-PACKING												31	15

(1) SMR CODE	(2) FEDERAL STOCK NUMBER	(3) DESCRIPTION REF NUMBER & MFR CODE	USABLE ON CODE	(4) UNIT OF MEAS	(5) QTY INC IN UNIT	(6) 30-DAY OS MAINT ALLOWANCE (a) 1-20	(b) 21-50	(c) 51-100	(7) 30-DAY GS MAINT ALLOWANCE (a) 1-20	(b) 21-50	(c) 51-100	(8) 1-YR ALW PER 100 EQUIP CNTGY	(9) DEPOT MAINT ALW PER 100 EQUIP	(10) ILLUSTRATION (a) FIG. NO.	(b) ITEM NO.
		7-RING, BACK-UP												31	16
P H		SEAL KIT: HYDRAULIC MOTOR 923000 (62983)		EA	1				*	*	*	*	*		
		1-GASKET												39	10
		1-SEAL												39	31
		1-PACKING												39	33
P H		ROTATING GROUP KIT: HYDRAULIC MOTOR 923001 (62983)		EA	1				*	*	*	*	*		
		1-RING												39	12
		1-WASHER												39	13
		1-SPRING												39	14
		1-WASHER												39	15
		3-PIN												39	16
		1-BLOCK												39	17
		1-WASHER												39	18
		1-WASHER												39	19
		1-PLATE												39	20
		9-PISTON												39	21
		1-PLATE												39	22
P H	4320-728-7474	SEAL KIT: CRANE 919242 (62983)		EA	1				*	*	*	*	*		
		1 GASKET												41	10
		1-SEAL												41	27
		1-PACKING												41	29
P H	4320-728-7475	ROTATING GROUP KIT 922999 (62983)		EA	1				*	*	*	*	*		
		1 RING												41	11
		1-WASHER												41	12
		1-SPRING												41	13
		1-WASHER												41	14
		3-PIN												41	15
		1-BLOCK												41	16
		1-WASHER												41	17
		1-WASHER												41	18
		1-PLATE												41	19
		9-PISTON												41	20
		1-PLATE												41	21
P O	2815-947-2951	PARTS KIT, DIESEL ENGINE 5196785 (72582) (INCLUDES COMPONENTS OF PARTS KIT, FSN 2815-792-9839		EA	1	*	*	*	*	*	*	*	*		
		3-PACKING												80	13
		1-GASKET												80	24
		1-GASKET												80	26

(1) SMR CODE	(2) FEDERAL STOCK NUMBER	(3) DESCRIPTION REF NUMBER & MFR CODE	USABLE ON CODE	(4) UNIT OF MEAS	(5) QTY INC IN UNIT	(6) 30-DAY DS MAINT ALLOWANCE (a) 1-20	(b) 21-50	(c) 51-100	(7) 30-DAY GS MAINT ALLOWANCE (a) 1-20	(b) 21-50	(c) 51-100	(8) 1-YR ALW PER 100 EQUIP CNTGY	(9) DEPOT MAINT ALW PER 100 EQUIP	(10) ILLUSTRATION (a) FIG. NO.	(b) ITEM NO.
		4-GASKET												107	6
		1-GASKET												81	3
		1-GASKET												81	10
		2-WASHER												85	11
		2-GASKET												86	3
		1-GASKET												90	7
		1-GASKET												90	8
		1-GASKET												91	11
		2-WASHER												91	12
		1-GASKET												92	1
		1-GASKET												92	24
		2-GASKET												94	5
		2-GASKET												95	5
		2-GASKET												98	9
		2-GASKET												98	9
		1-GASKET												99	9
		1-GASKET												100	8
		1-GASKET												100	10
		2-GASKET												100	14
		2-GASKET												111	18
		1-GASKET												101	6
		1-SCREEN												101	7
		1-GASKET												102	3
		2-GASKET												102	4
		1-SEAL												102	5
		1-GASKET												102	11
		2-SEAL												104	5
		1-GASKET												104	9
		1-GASKET												105	5
		1-SEAL												105	7
		2-GASKET												105	16
		6-PACKING												108	16
		2-RING												111	1
		6-GASKET												111	2
		8-WASHER												111	3
		8-WASHER												111	4
		4-WASHER												111	5
		1-GASKET												111	13
		4-GASKET												111	21
		4-GASKET												111	24
		2-GASKET												130	31

(1) SMR CODE	(2) FEDERAL STOCK NUMBER	(3) DESCRIPTION REF NUMBER & MFR CODE	USABLE ON CODE	(4) UNIT OF MEAS	(5) QTY INC IN UNIT	(6) 30-DAY DS MAINT ALLOWANCE (a) 1-20	(b) 21-50	(c) 51-100	(7) 30-DAY GS MAINT ALLOWANCE (a) 1-20	(b) 21-50	(c) 51-100	(8) 1-YR ALW PER 100 EQUIP CNTGY	(9) DEPOT MAINT ALW PER 100 EQUIP	(10) ILLUSTRATION (a) FIG. NO.	(b) ITEM NO.
		1-O,RING													
		1-O,GASKET													
		1-O,GASKET													
		1-O,GASKET													
P O	2815-792-9839	PARTS KIT, CYLINDER HEAD 5196578 (72582)		EA	2	*	*	*	*	*	*	*	*		
		6-PACKING												80	13
		2-GASKET												92	24
		2-GASKET												94	5
		2-GASKET												95	5
		4-GASKET												74	43
		4-GASKET												80	34
		4-GASKET												107	6
		2-RING												111	1
		6-GASKET												111	2
		8-WASHER												111	3
		8-WASHER												111	4
		4-WASHER												111	5
		2-O,GASKET													
		2-O,GASKET													
		2-O,GASKET													
		2-O,WASHER													
		2-O,GASKET													
P H		REPAIR KIT: BLOWER 5197730 (72582)		EA	1				*	*	*	*	*		
		2-WASHER												90	5
		1-GASKET												92	1
		4-CLAMP												92	4
		2-HOSE												92	5
		1-HOSE												92	5
		1-GASKET												93	3
		1-SCREEN												101	7
		1-GASKET												102	3
		2-GASKET												102	4
		1-SEAL												102	5
		1-GASKET												102	11
		2-BUSHING												102	33
		V-SHIM												102	36
		V-SHIM												102	36
		V-SHIM												102	36
		V-SHIM												102	36
		2-SPACER												102	37

(1) SMR CODE	(2) FEDERAL STOCK NUMBER	(3) DESCRIPTION REF NUMBER & MFR CODE	USABLE ON CODE	(4) UNIT OF MEAS	(5) QTY INC IN UNIT	(6) 30-DAY DS MAINT ALLOWANCE (a) 1-20	(b) 21-50	(c) 51-100	(7) 30-DAY GS MAINT ALLOWANCE (a) 1-20	(b) 21-50	(c) 51-100	(8) 1-YR ALW PER 100 EQUIP CNTGY	(9) DEPOT MAINT ALW PER 100 EQUIP	(10) ILLUSTRATION (a) FIG. NO.	(b) ITEM NO.
P H	2910-588-0204	PARTS KIT: FUEL INJECTOR 5193221 (72582)		EA	6				*	*	*	*	*		
		12-SPACER												97	5
		12-ELEMENT												97	7
		6-PACKING												97	9
P H	2910-967-6026	PARTS KIT: FUEL INJECTOR 5228491 (72582)		EA	6				*	*	*	*	*		
		6-TIP												97	11
		6-VALVE												97	12
		6-VALVE ASSEMBLY												97	13
		6-VALVE KIT												97	16
		6-STOP												97	18
		6-CAGE												97	19
P H		GUIDE KIT, POPPET VALVE 5198529 (72582)		EA	24				*	*	*	*	*		
X1		24, SEAL ASSEMBLY 5131973 (72582)												107	19
X1		24, GUIDE 5131961 (72582)		EA	1									107	20
P H	2815-792-8249	CYLINDER KIT, ENGINE 5198903 (72582)		EA	6				*	*	*	*	*		
		6-RING SET												108	1
		6-PIN												108	2
		6-PISTON												108	3
		6-PISTON AND BUSHING												108	4
		12-BEARING												108	5
		12-RETAINER												108	6
		6-CYLINDER SLEEVE												108	15
		6-PACKING												108	16
P F	2530-728-7470	KIT, REPAIR: TRAILER BRAKING VALVE RN10AS (40342)		EA	1	*	*	*	*	*	*	*	*		
		1-SPRING												126	19
		1-PACKING												126	29
		1-PACKING												126	31
		1-SPRING												126	32
		2-PACKING												126	35
		1-DISC ASSEMBLY												126	37
		1-VALVE												126	38
		1-SPRING												126	39
P F	2530-353-2921	PARTS KIT, HYDRAULIC: POWER CLUSTER AC3077 (63477)		EA	1	*	*	*	*	*	*	*	*		
		1-PISTON CUP AND SPRING, ASSEMBLY												128	19
		1-WIPER												128	20

(1) SMR CODE	(2) FEDERAL STOCK NUMBER	(3) DESCRIPTION REF NUMBER & MFR CODE	USABLE ON CODE	(4) UNIT OF MEAS	(5) QTY INC IN UNIT	(6) 30-DAY DS MAINT ALLOWANCE (a) 1-20	(b) 21-50	(c) 51-100	(7) 30-DAY GS MAINT ALLOWANCE (a) 1-20	(b) 21-50	(c) 51-100	(8) 1-YR ALW PER 100 EQUIP CNTGY	(9) DEPOT MAINT ALW PER 100 EQUIP	(a) FI NO
		1-BOOT												12
		1-PISTON ASSEMBLY												12
		1-CUP												12
P F		CARTRIDGE KIT: STEERING PUMP 923482 (62983)		EA	1	*	*	*	*	*	*	*	*	
		1-RING												13
		2-PACKING												13
		1-VANE KIT												13
		1-ROTOR												13
P F		SEAL KIT: STEERING PUMP 922733 (62983)		EA	1	*	*	*	*	*	*	*	*	
		2-PACKING												13
		1-SEAL												13
P F		KIT, SERVICE: HYDRAULIC STEERING CYLINDER, REAR 39189 (94431)		EA	1	*	*	*	*	*	*	*	*	
		1-SEAL												13
		1-SEAL												13
		1-RETAINER												13
		1-PACKING												13
		2-U CUP												13
		2-PACKING												13
P F		KIT, SERVICE: POWER STEERING VALVE 2199-2 (94431)		EA	1	*	*	*	*	*	*	*	*	
		1-PACKING												13
		2-PACKING												13
		1-PACKING												
		2-PACKING												
		2-RING												
P F	2530-755-7336	KIT, REPAIR, SPIDER: STEERING CPL6S22 (70960)		EA	2	*	*	*	*	*	*	*	*	
		2-FITTING												13
		8-RING												13
		8-BUSHING												13
		8-WASHER												13
		2-SPIDER												13

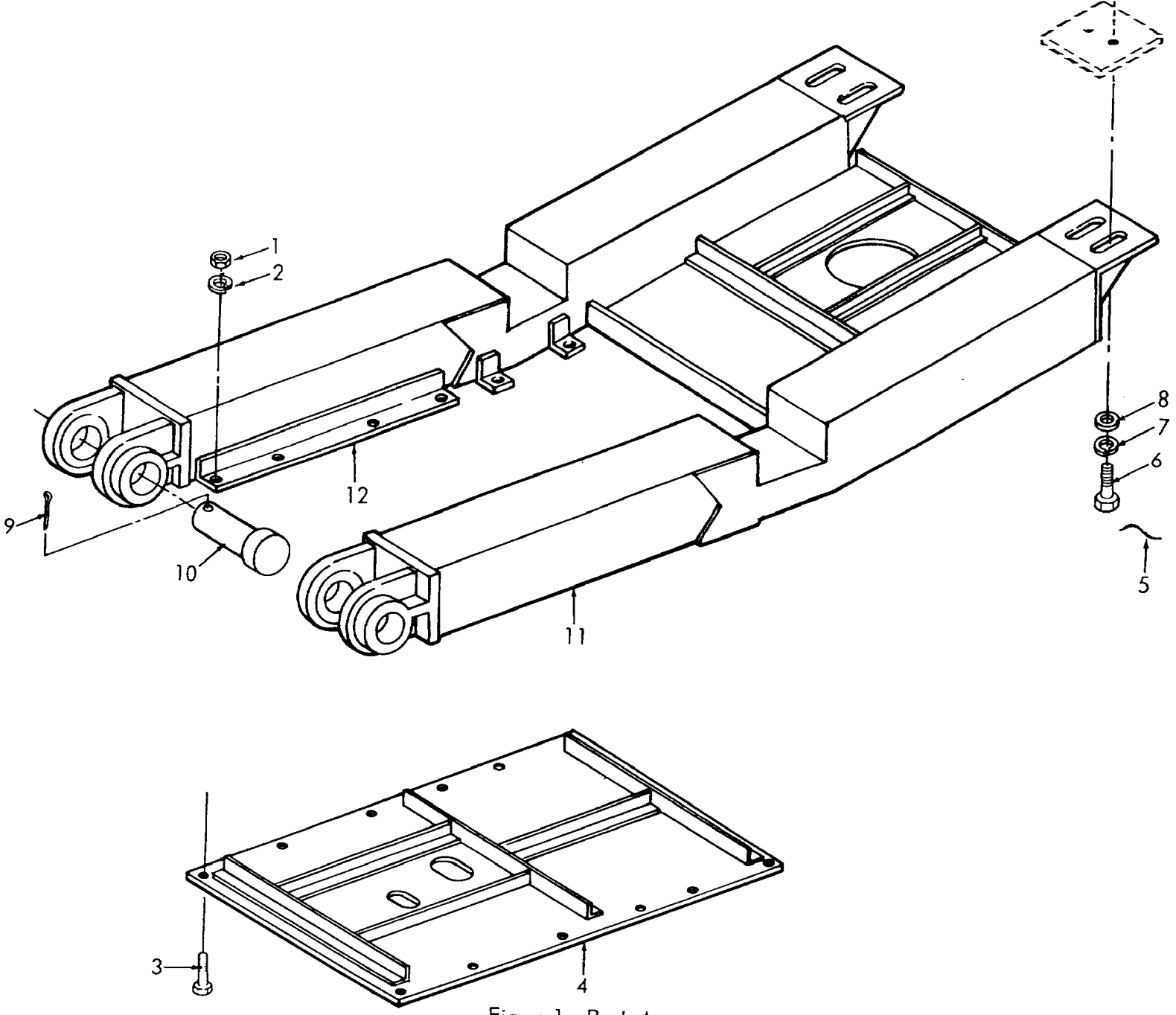

Figure 1. Push Arms

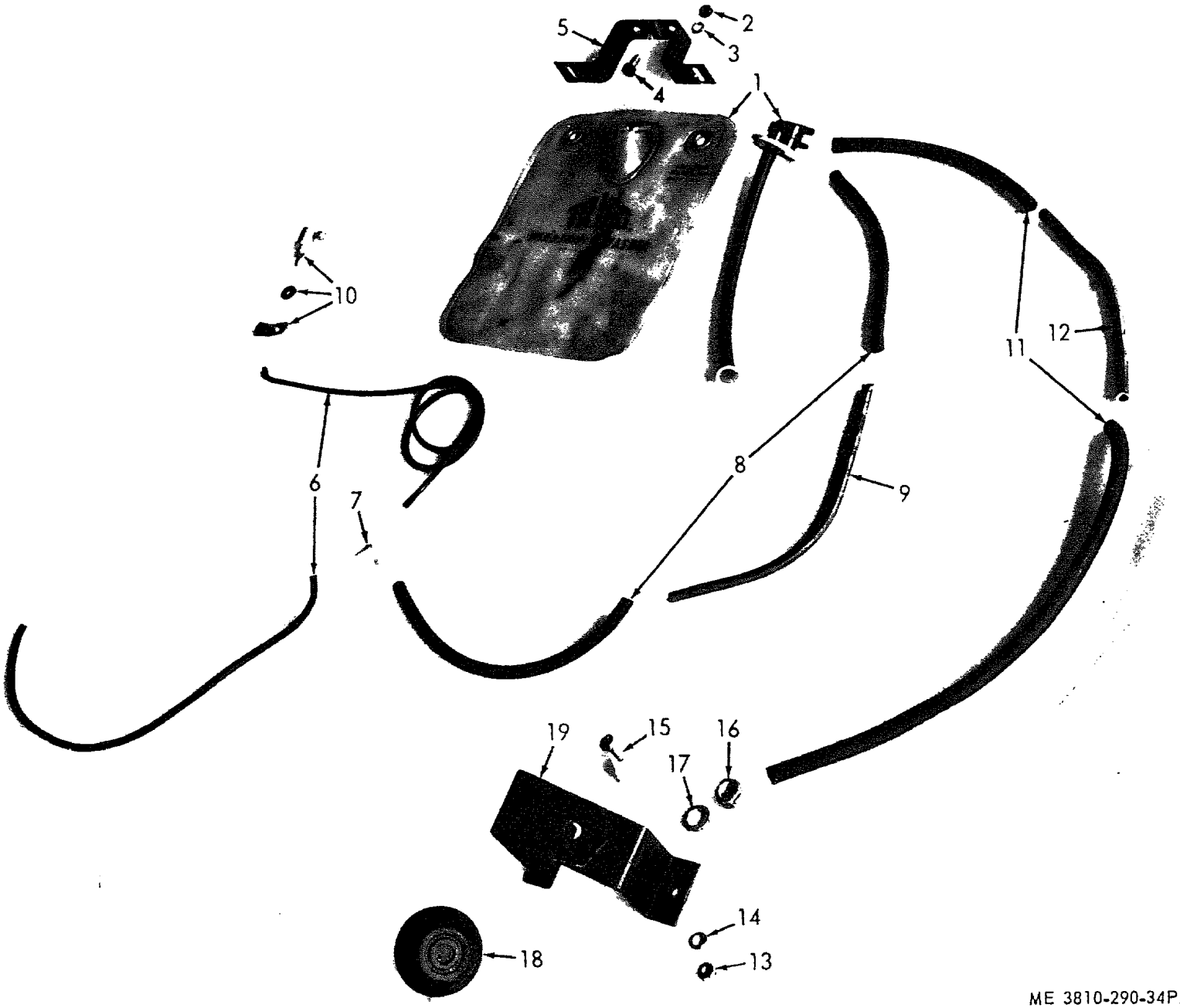

ME 3810-290-34P/2

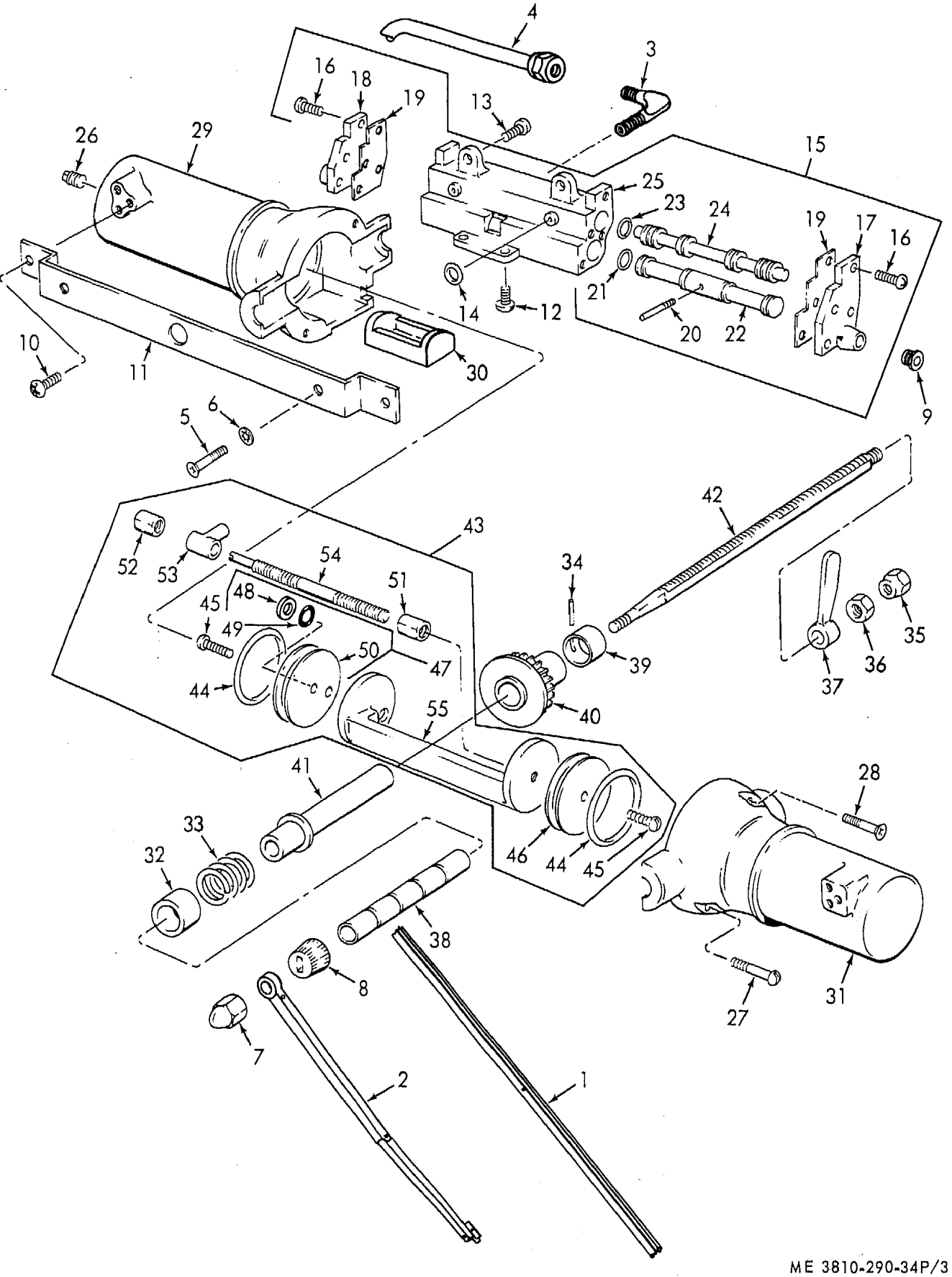

ME 3810-290-34P/3

Figure 3. Wiper and Motar

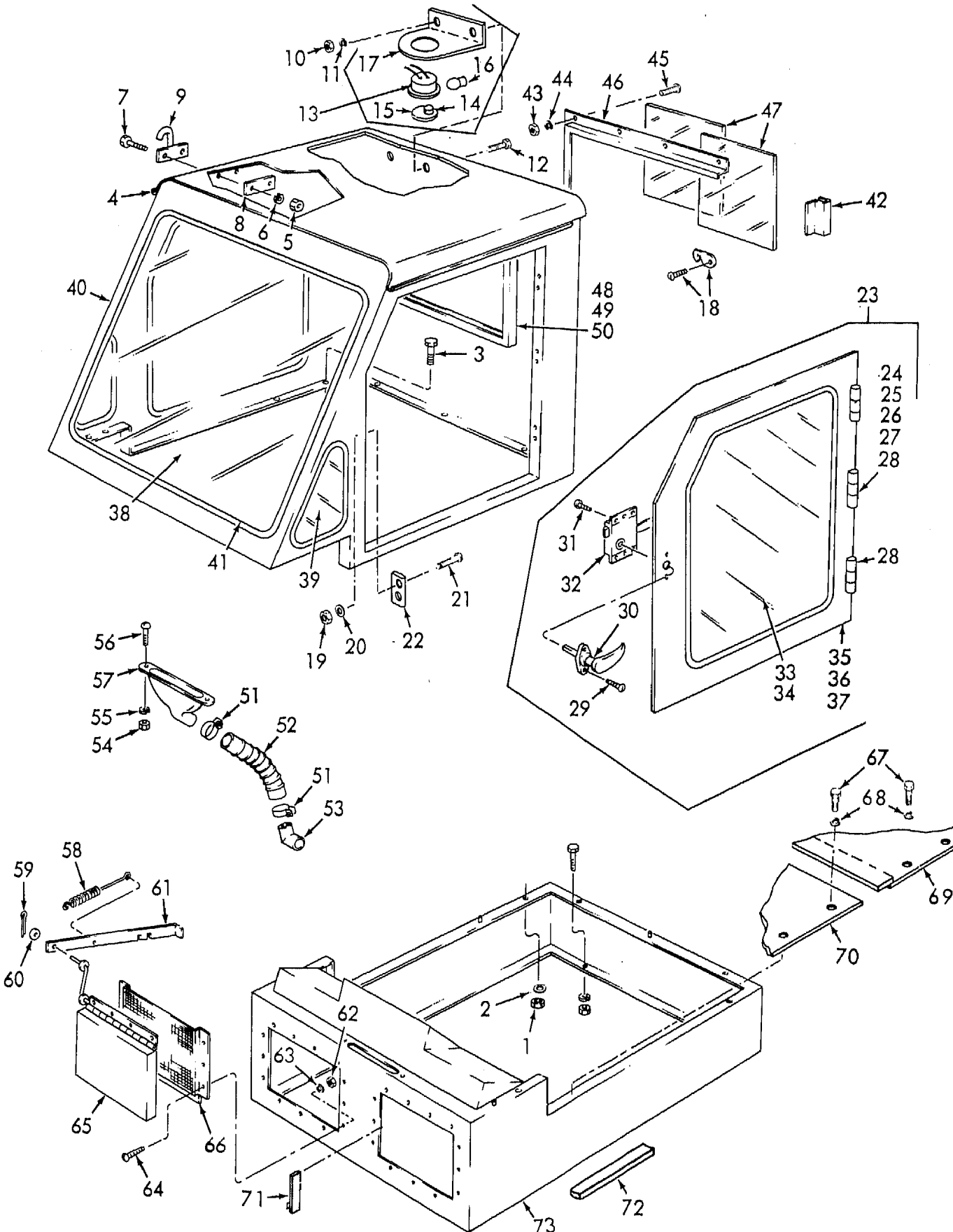

Figure 4. Cab

ME 3810-290-34

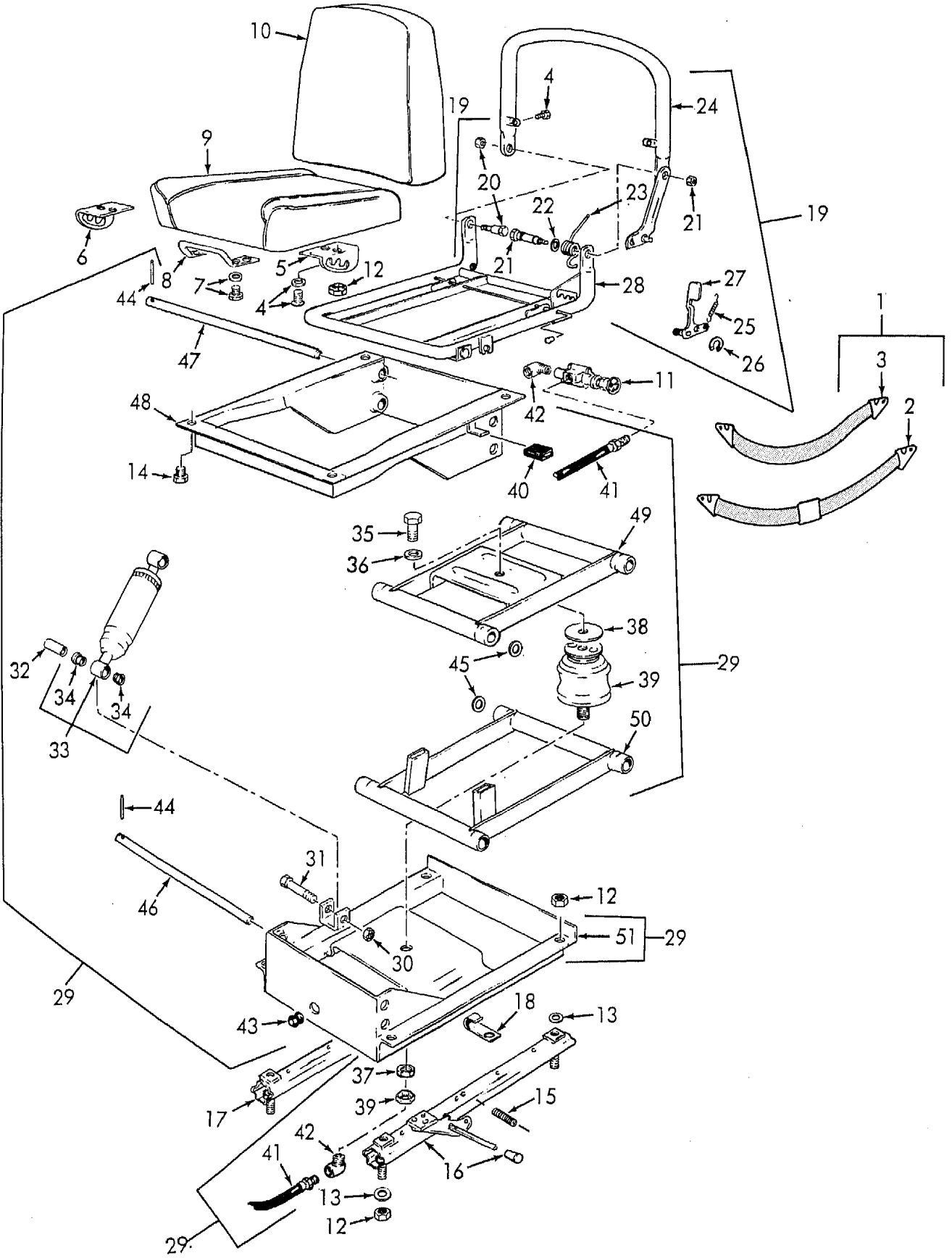

Figure 5. Seat

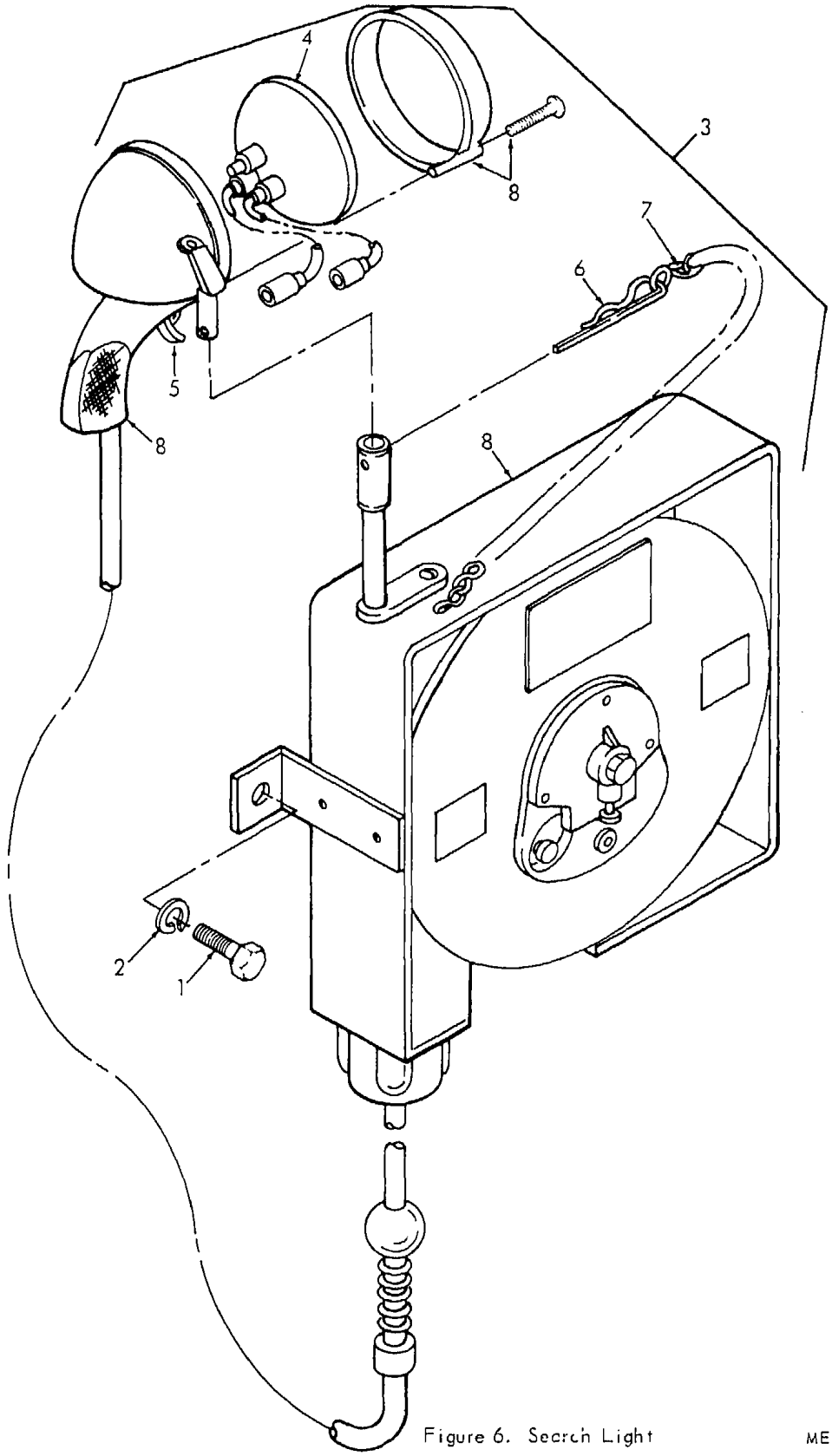

Figure 6. Search Light

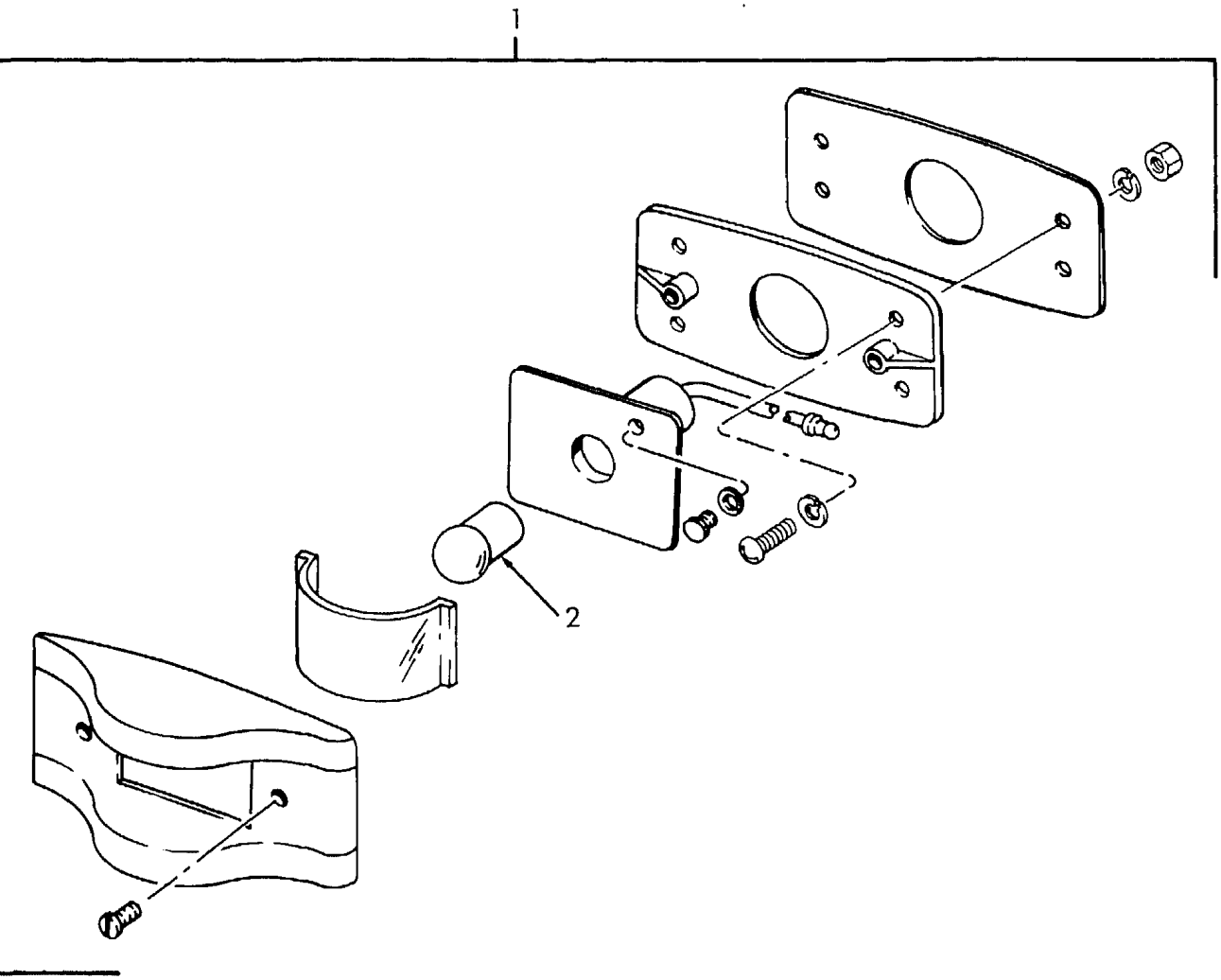

Figure 7. Clearance Lights

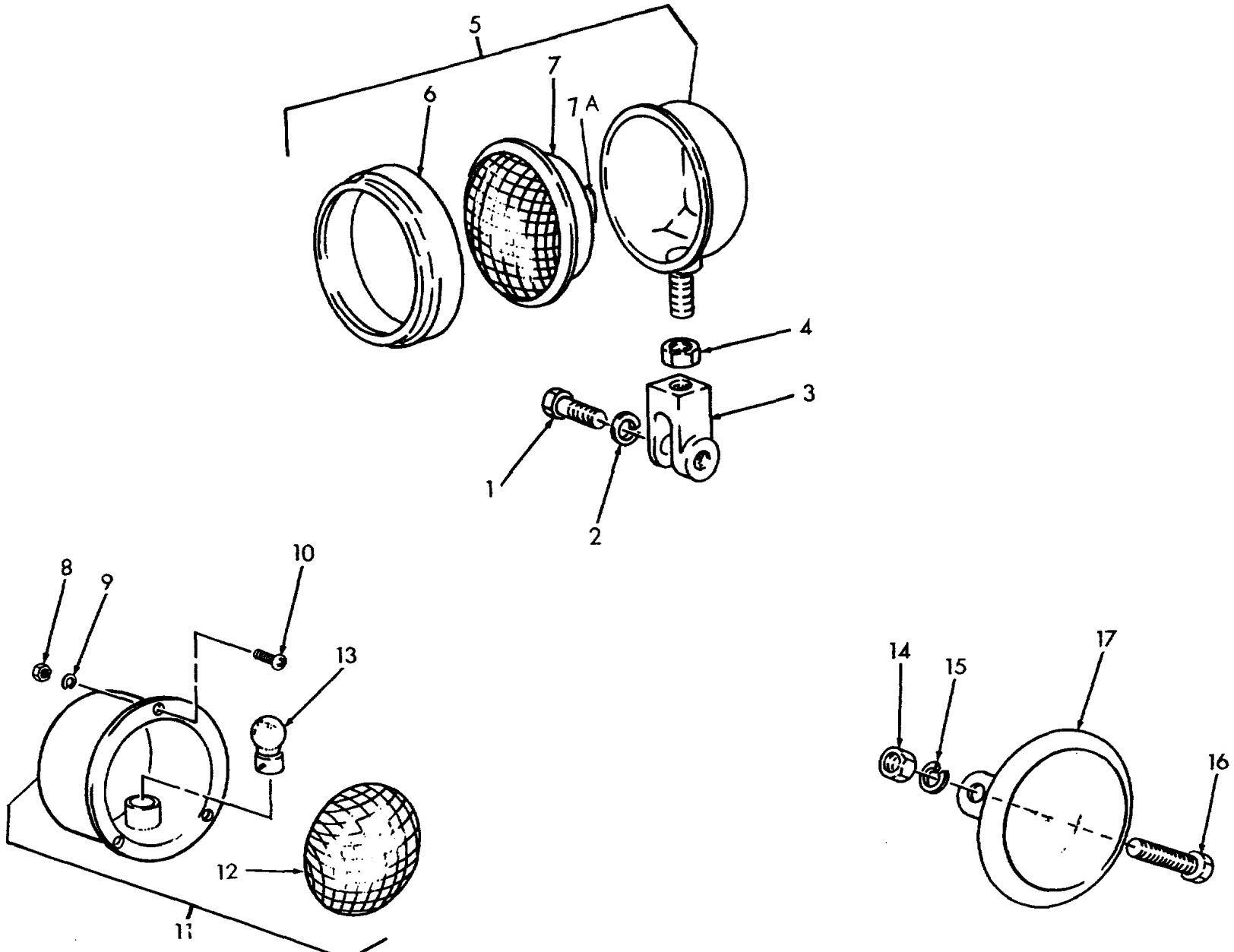

Figure 8. Carrier Lights

ME 3810-290-34P/8

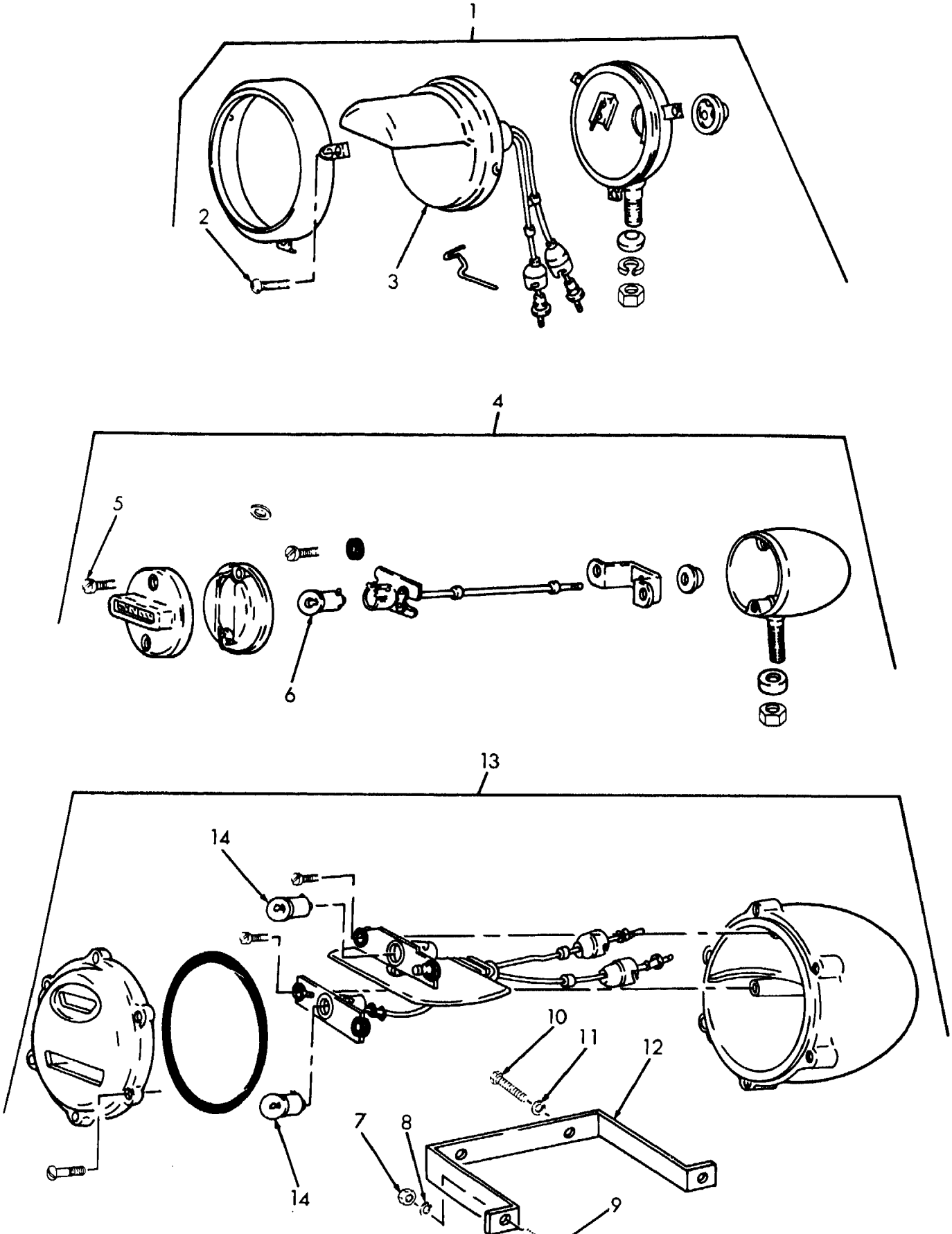

Figure 9. Blackout Lights

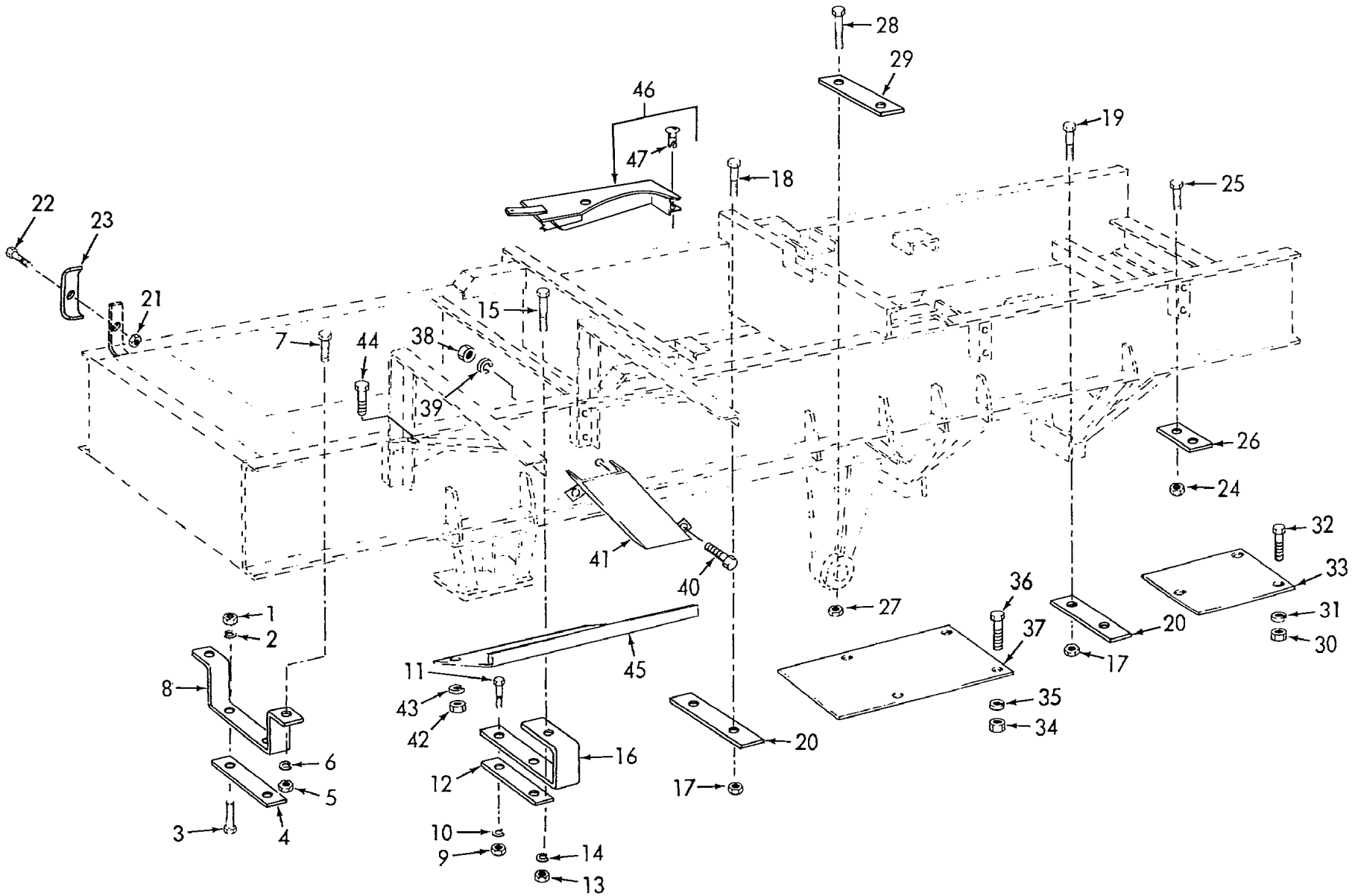

ME 3810-290-34P/10

Figure 10. Hydraulic Tube Brackets

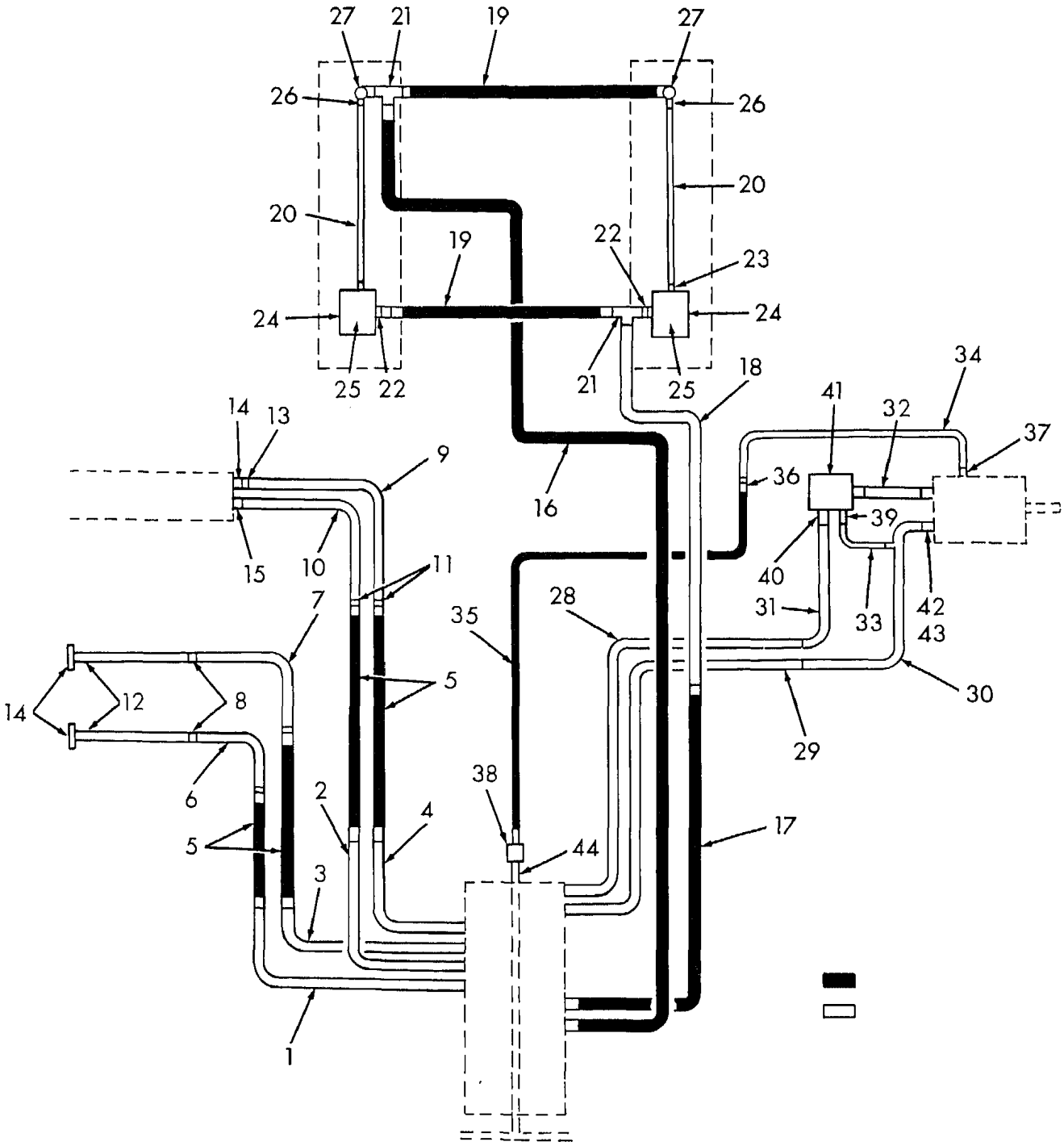

Figure 11. Hydraulic Lines and Fittings

ME 3810-290-34P/11

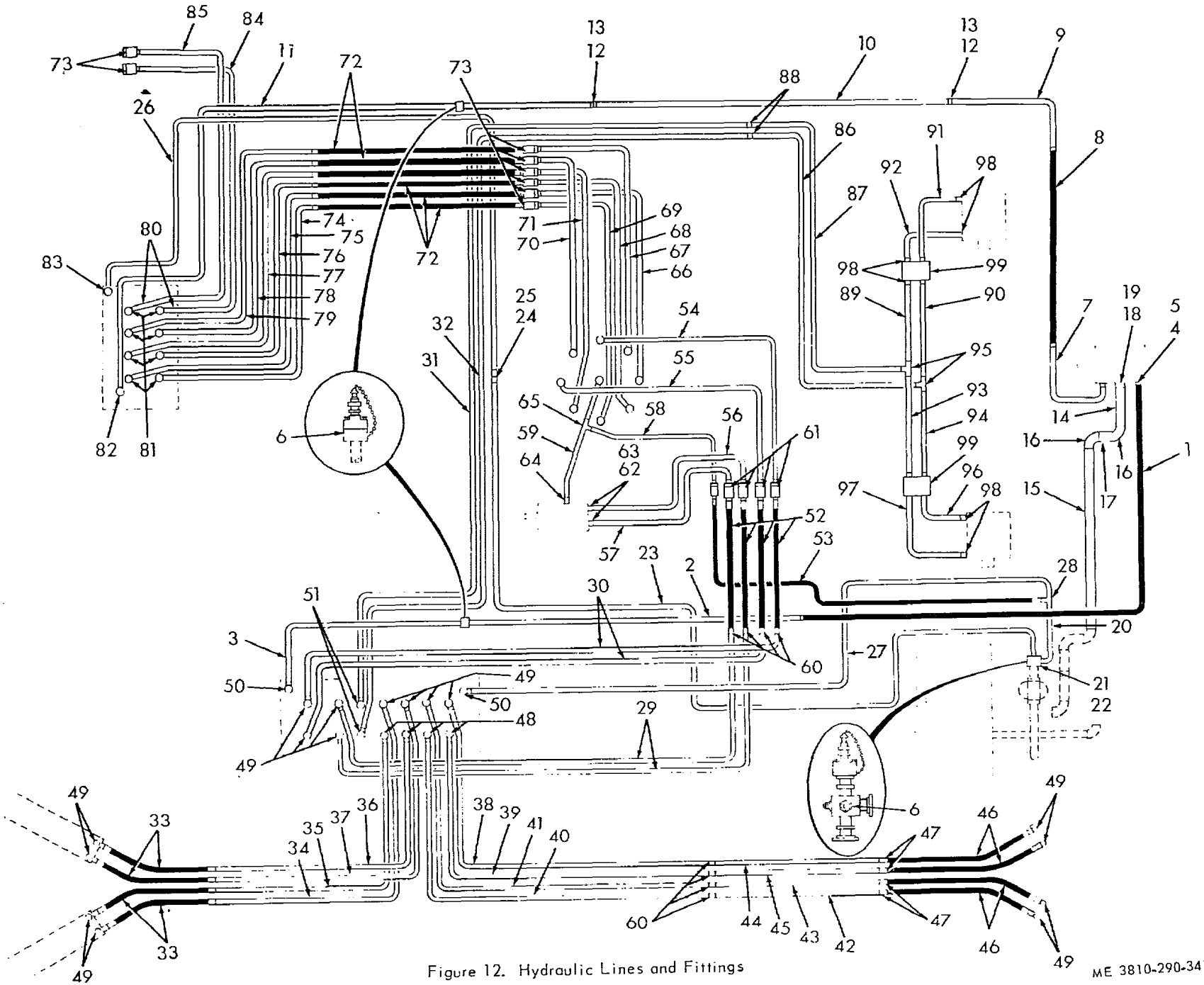

Figure 12. Hydraulic Lines and Fittings

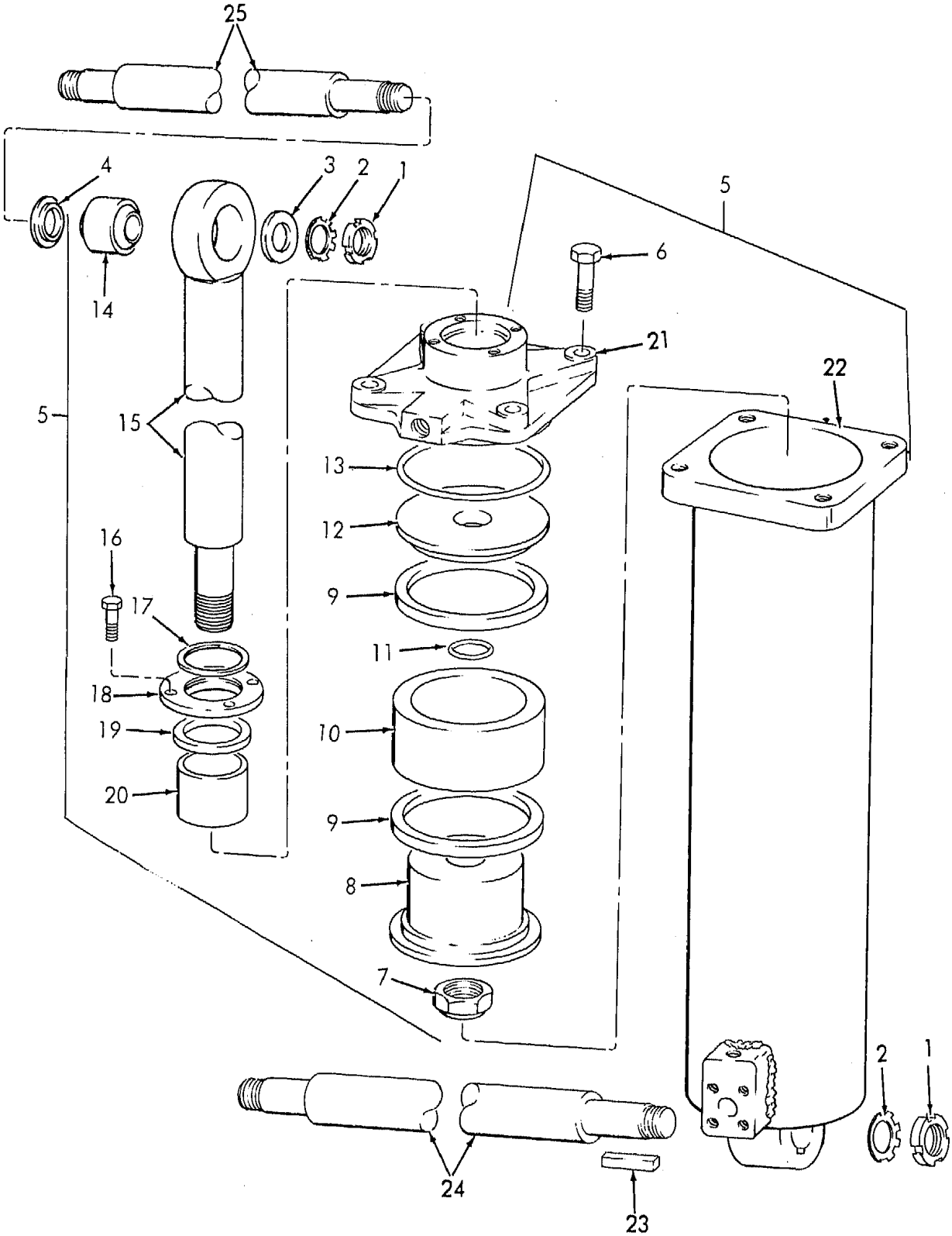

Figure 13. Boom Hoist Cylinder

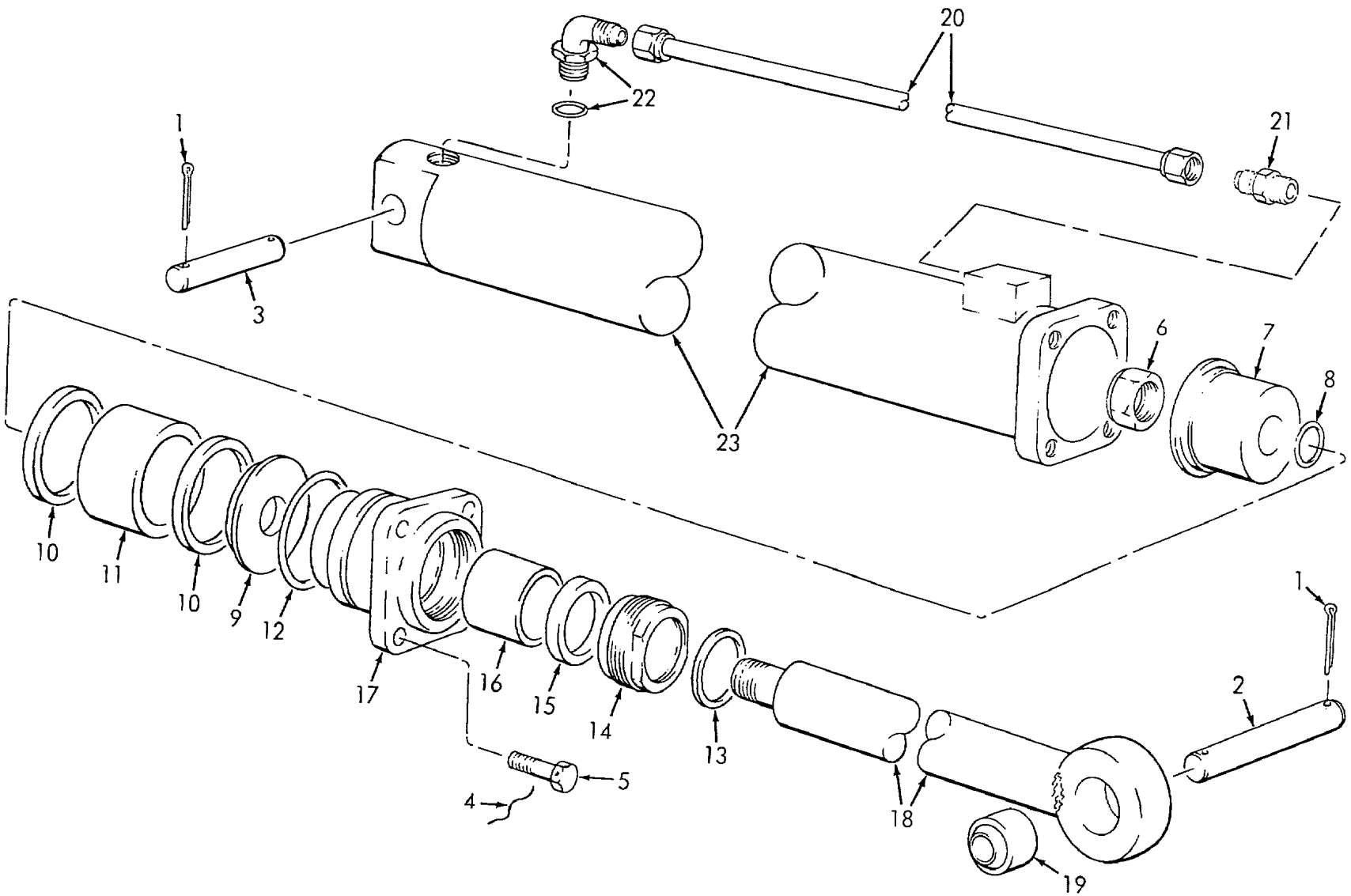
20
22
1
21
3
6
7
8
23
10
11
10
9
12
17
16
15
14
13
1
2
5
4
18
19

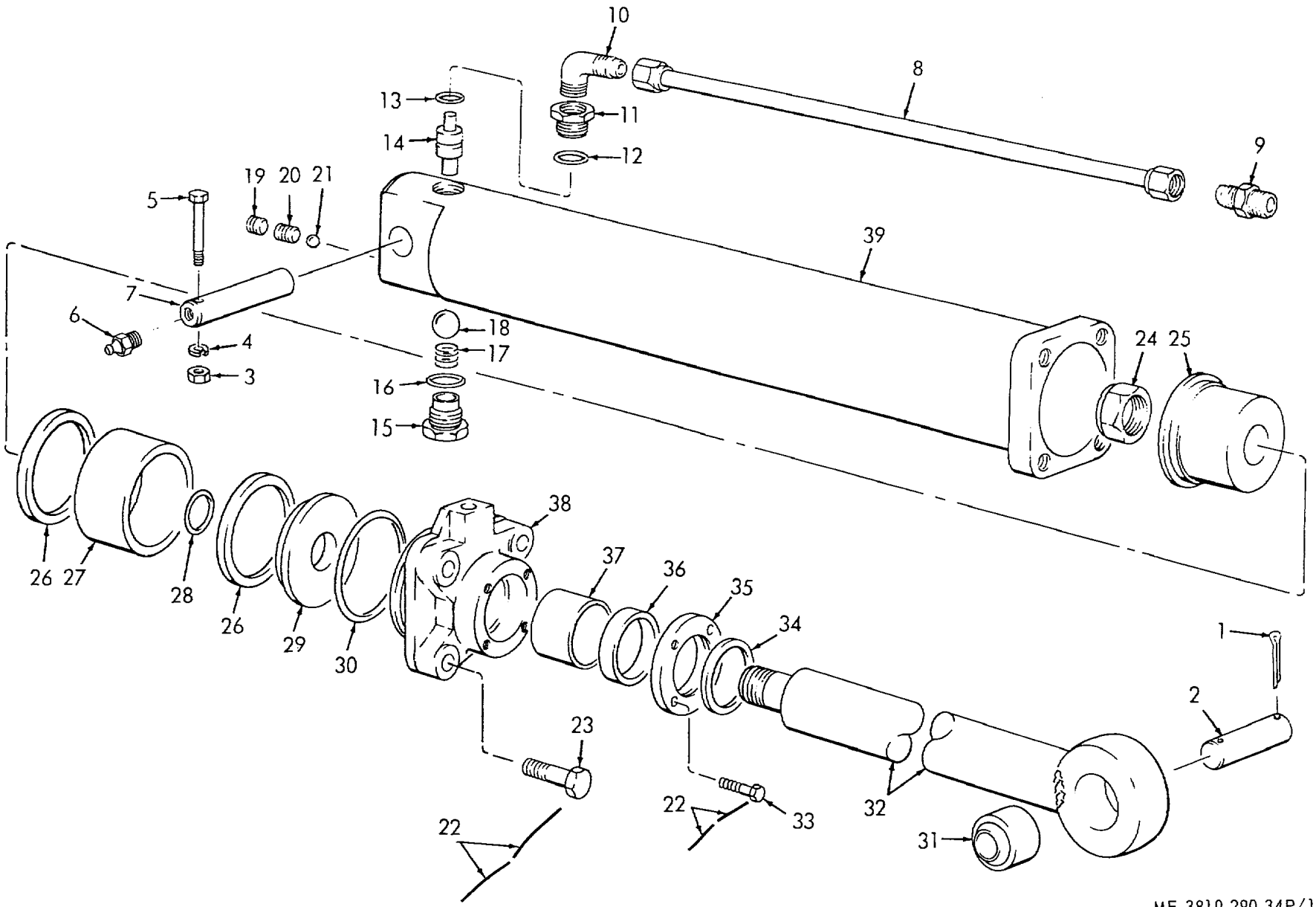

Figure 15. Outrigger Cylinder

ME 3810-290-34P/15

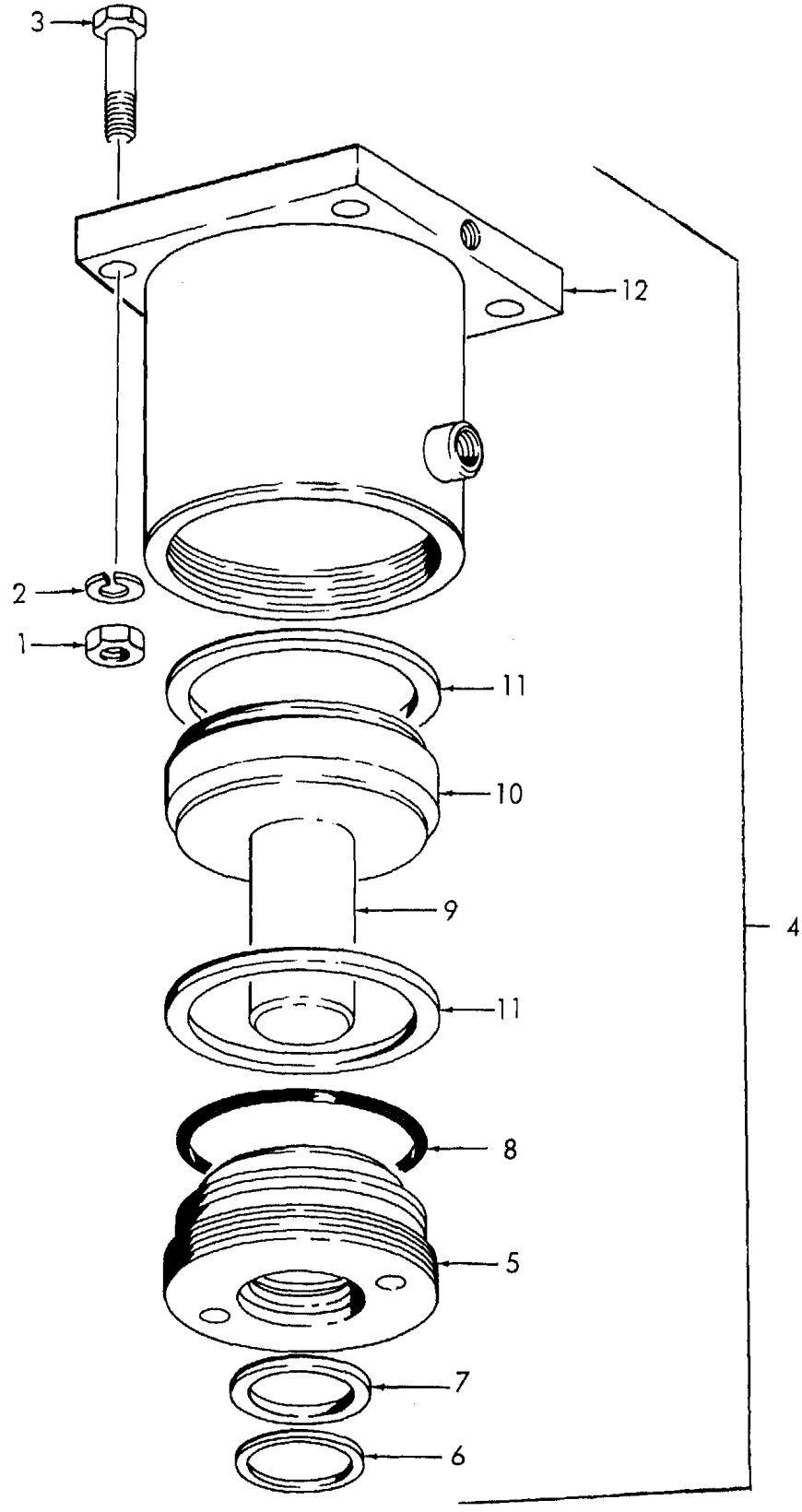

Figure 16. Stabilizing Cylinder

ME 3810-290-34P/16

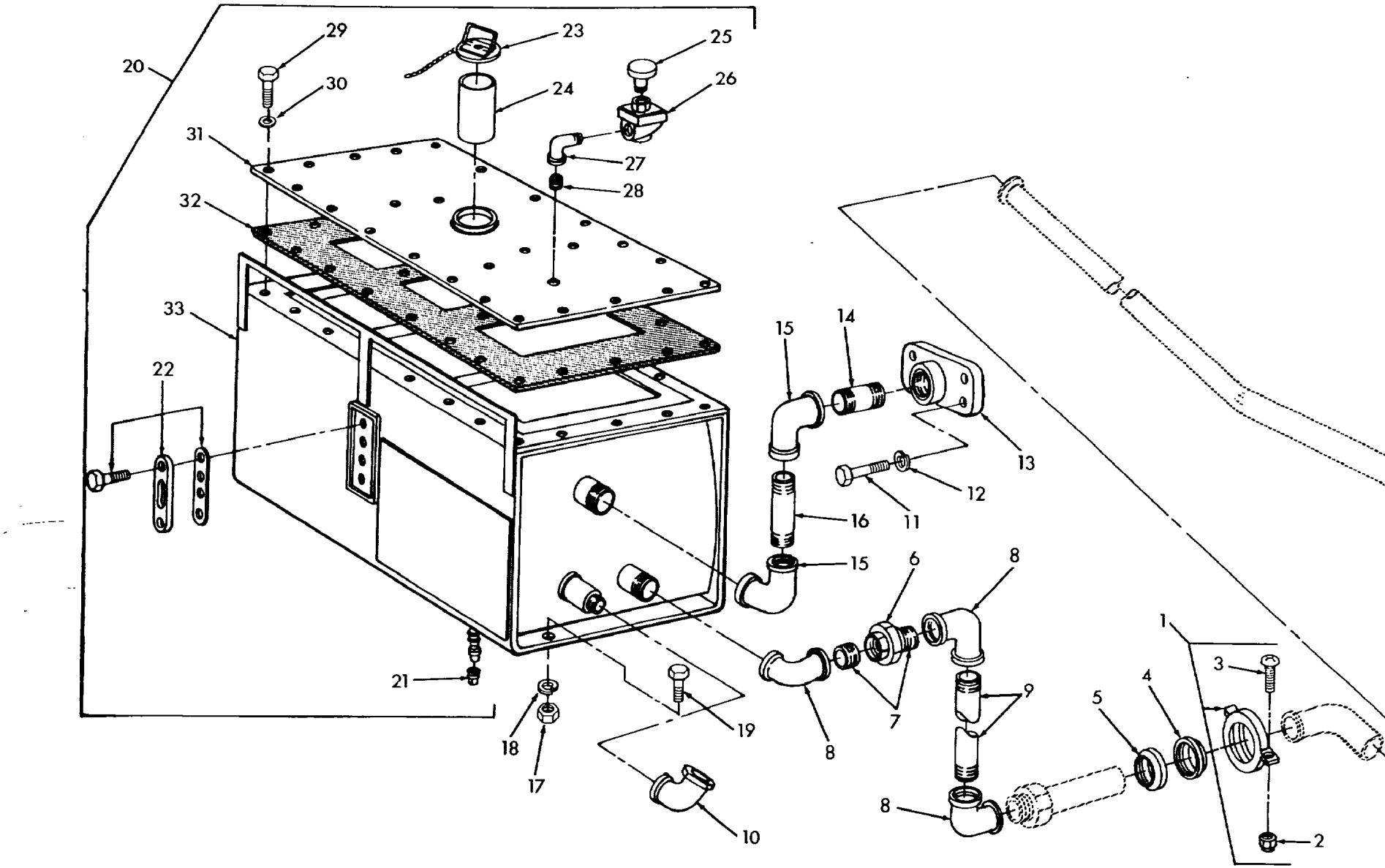

Figure 17. Hydraulic Reservoir and Connections

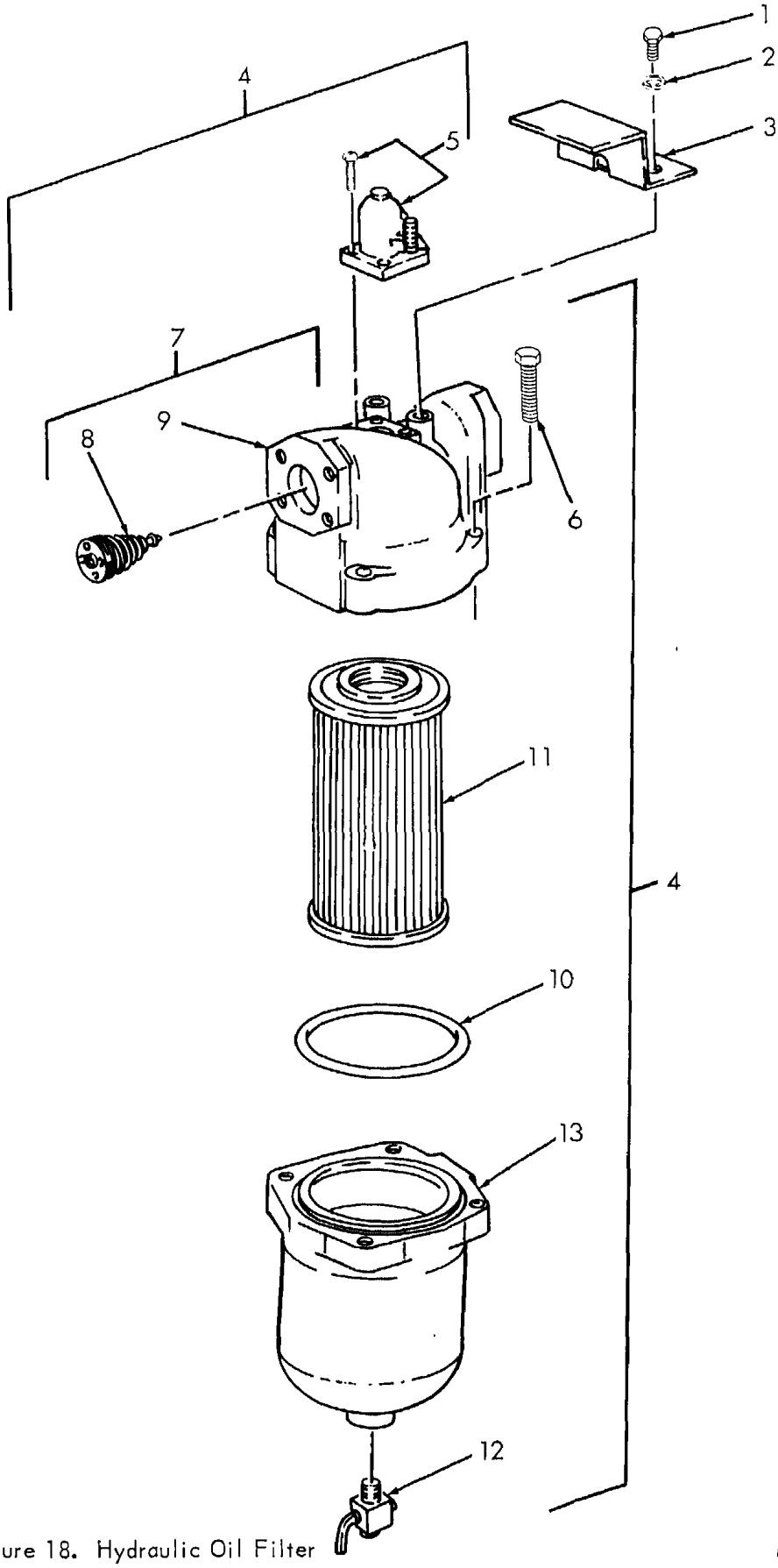

Figure 18. Hydraulic Oil Filter

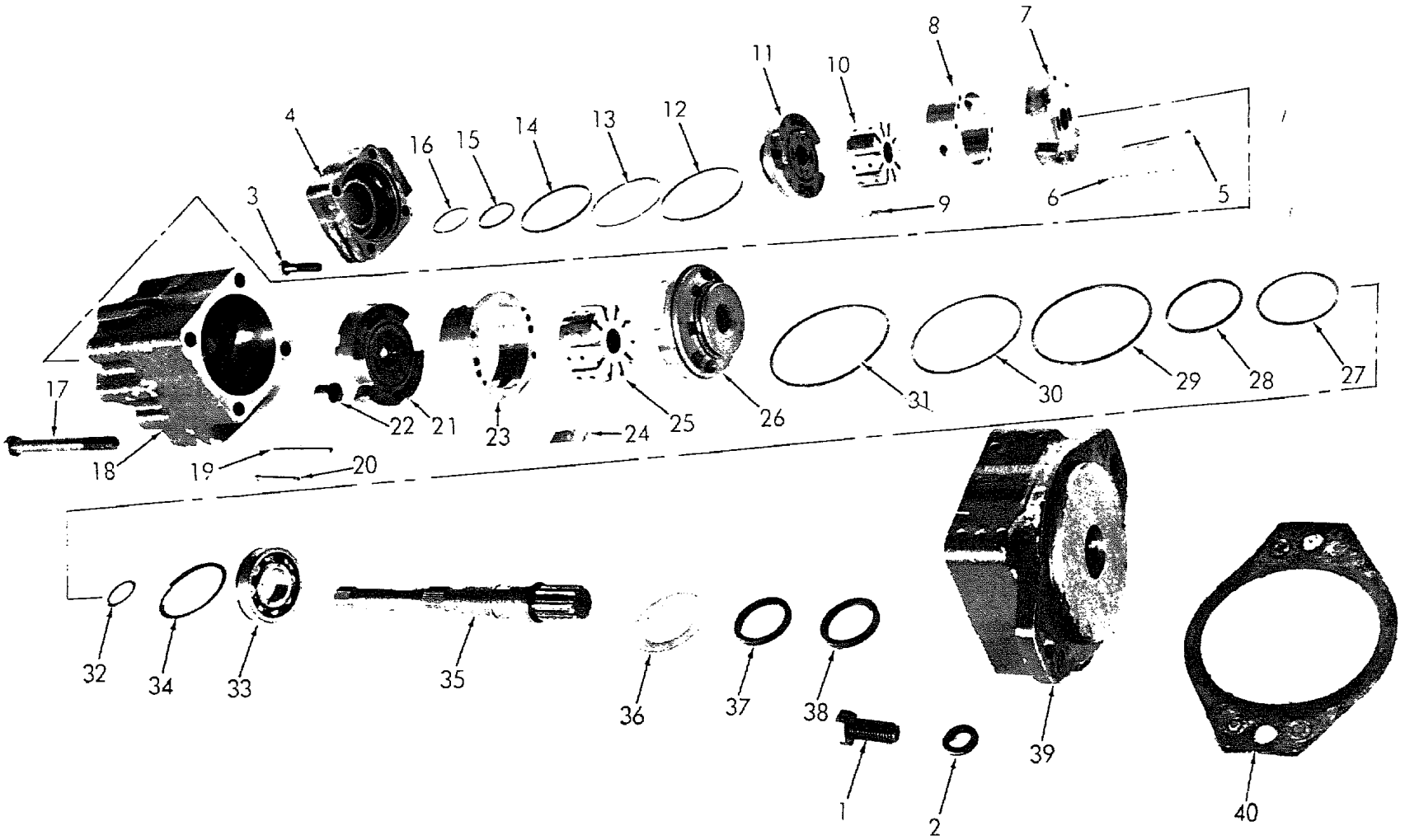

Figure 19. Hydraulic Pump

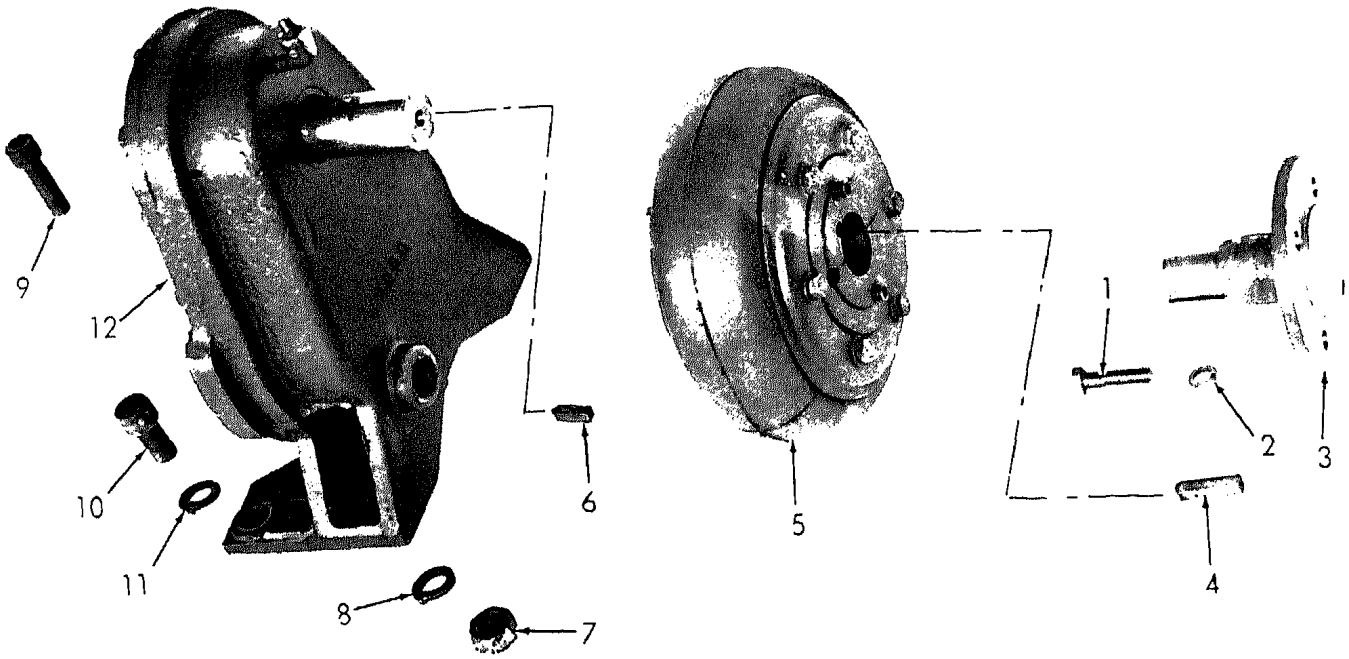

Figure 20. Pump Drive

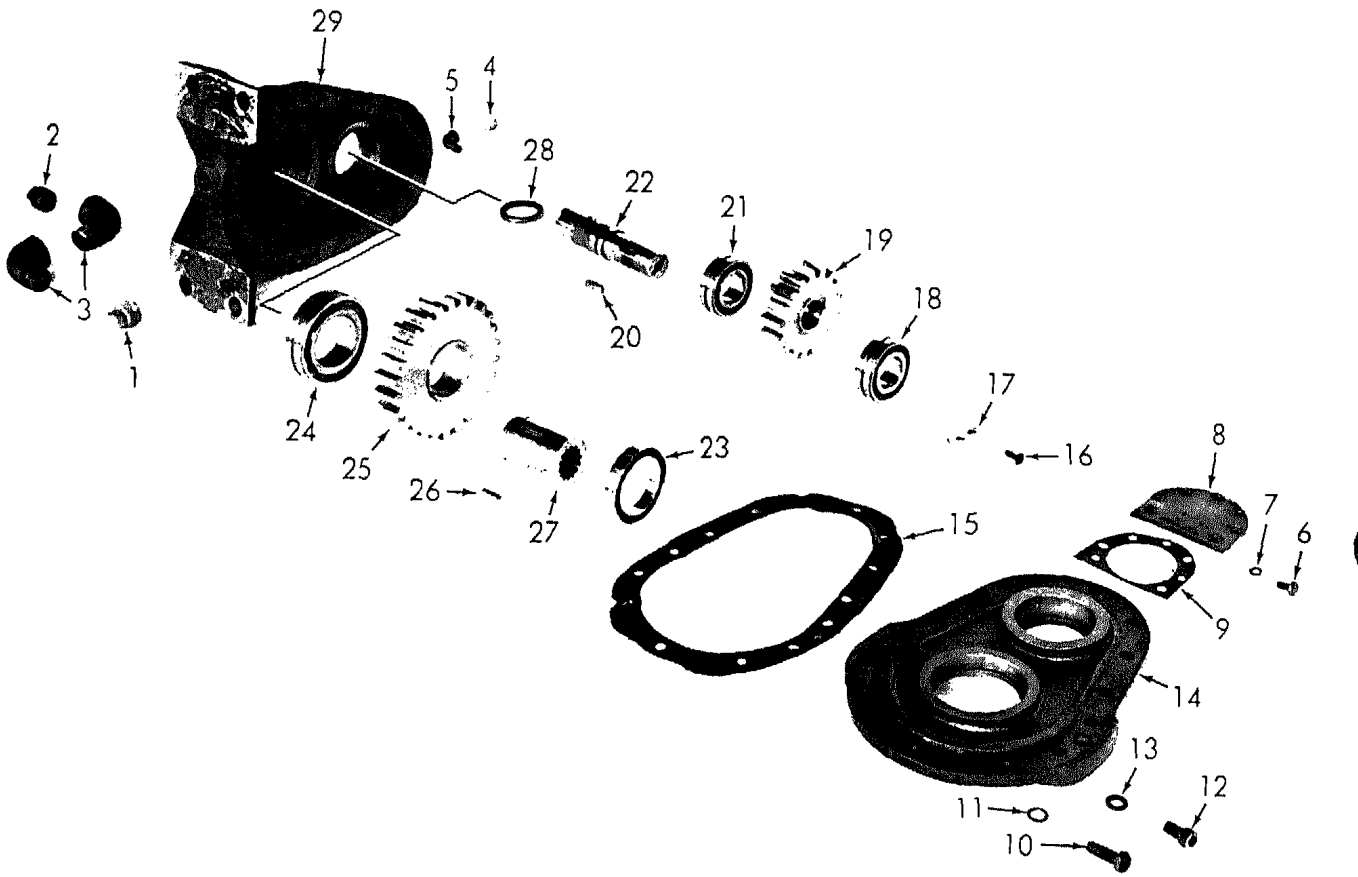

ME 3810-290-34P '21

Figure 21. Pump Drive Gear Box

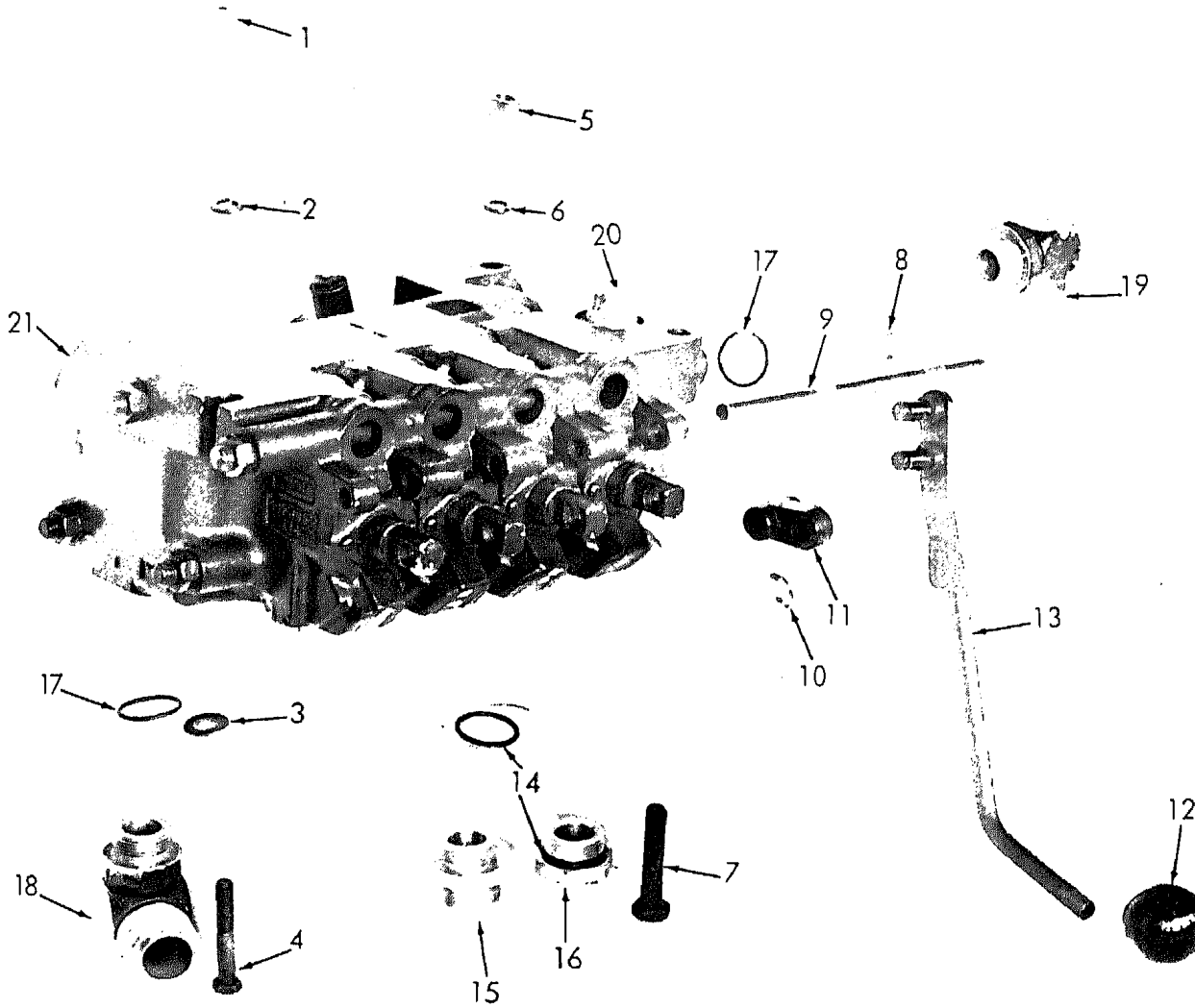

ME 3810-290-34P 22

Figure 22. Main Valve Bank

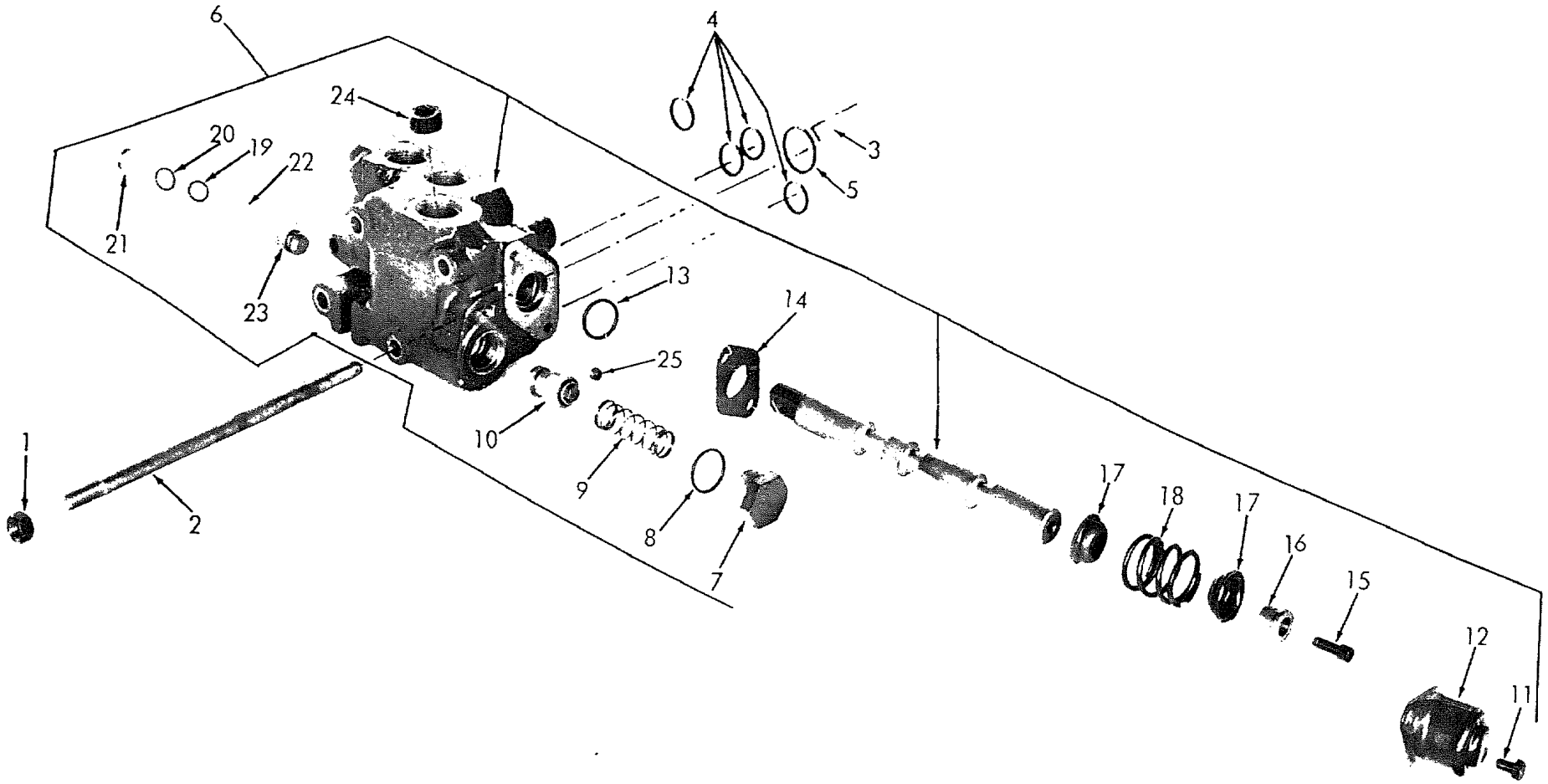

ME 3810-290-34P 23

Figure 23. M[illegible]alve Bank Inlet Valve

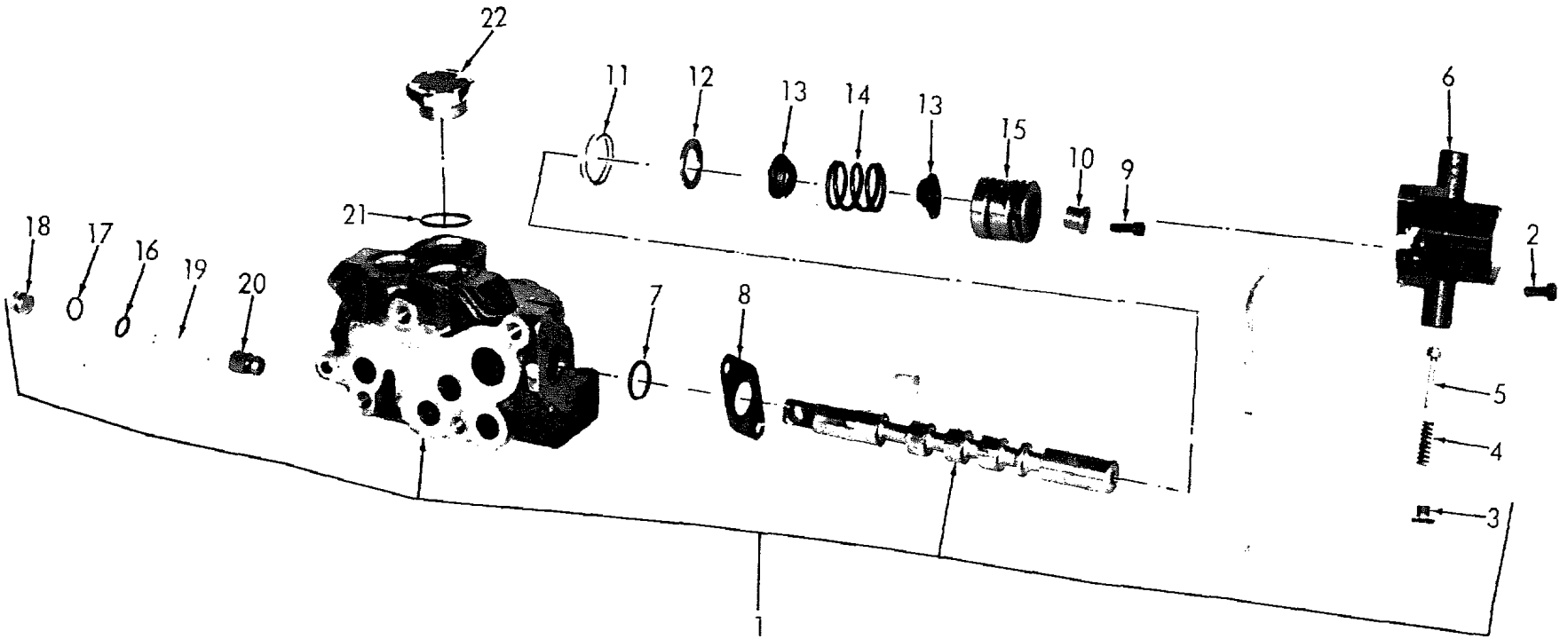

Figure 24. Main Valve Bank Outlet Valve

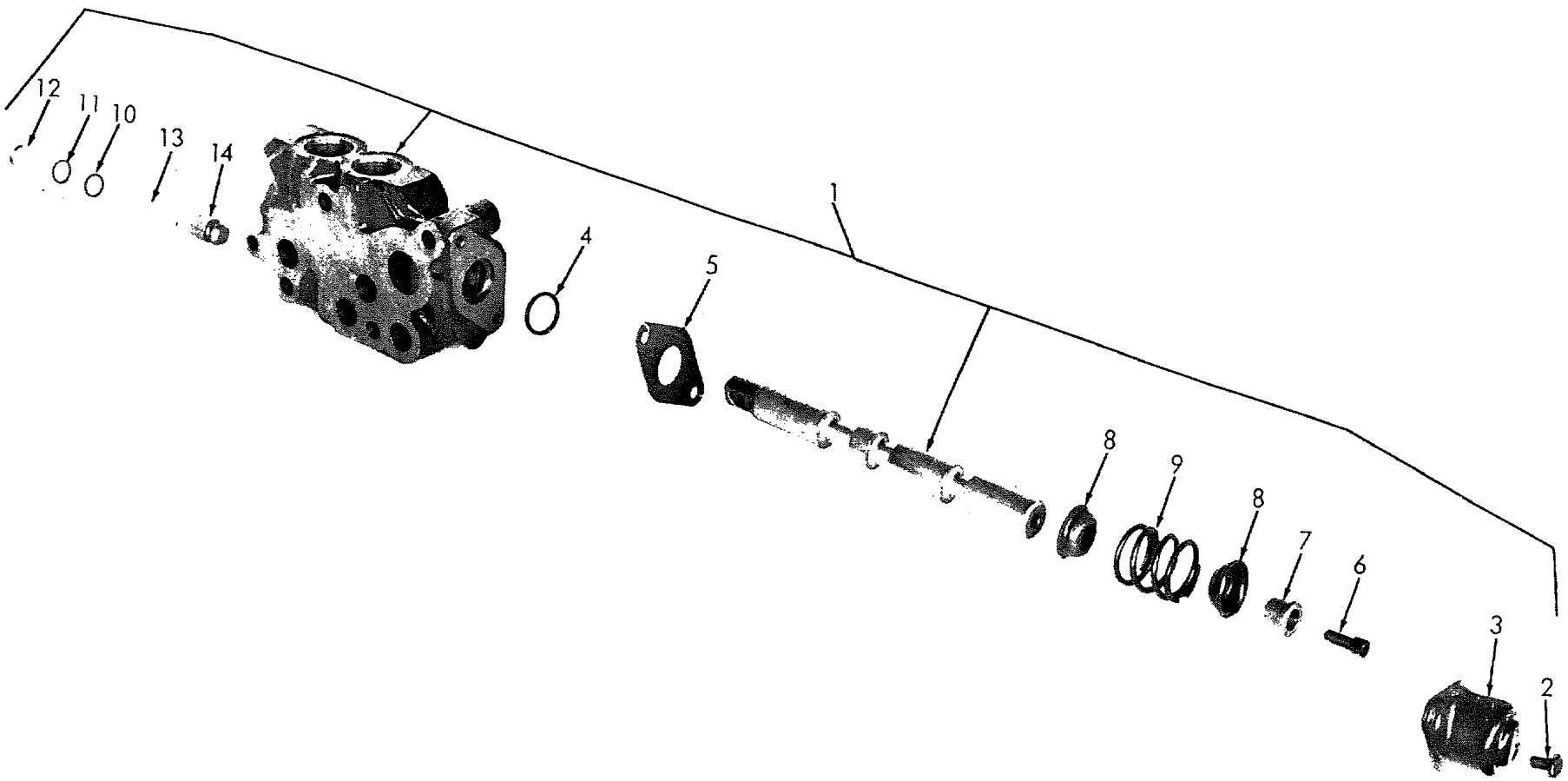

ME 3810-290-34P/25

Figure 25. Main Valve Bank Hoist Valve

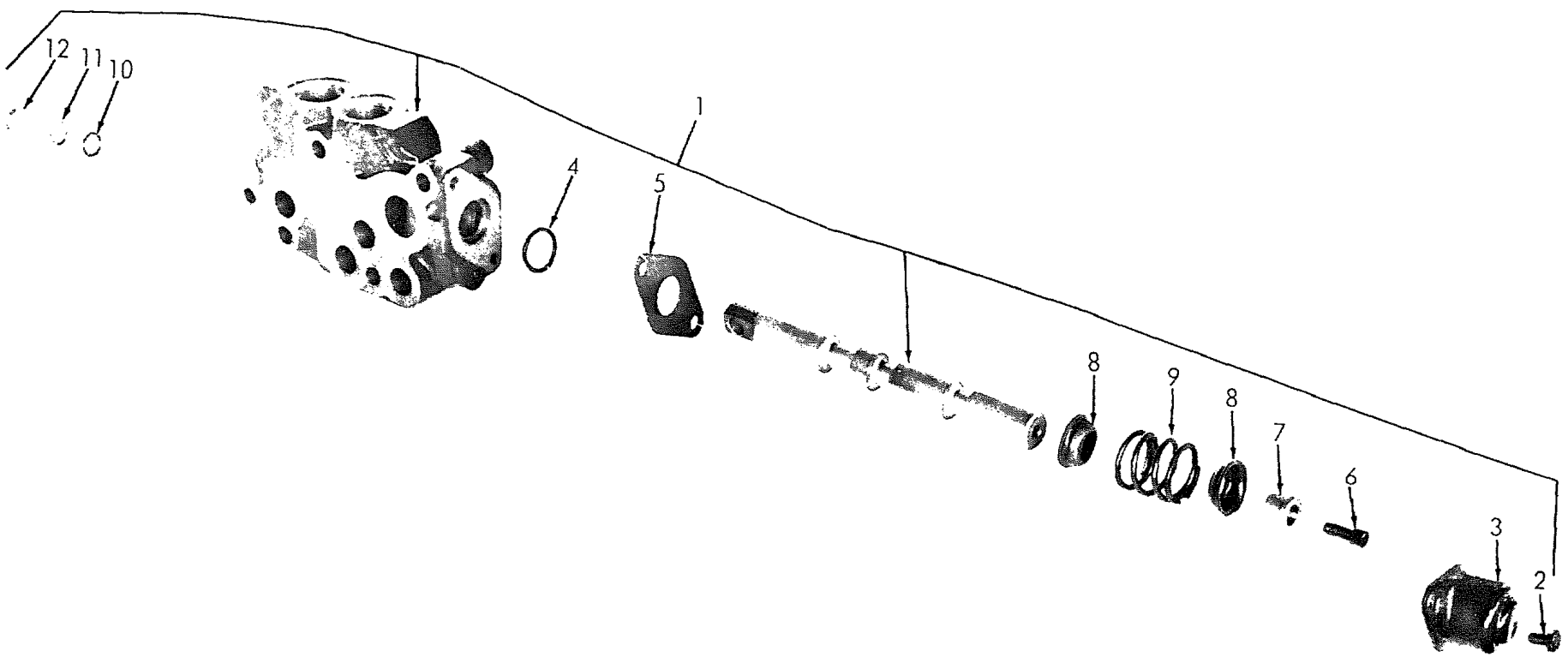

ME 3810-290-34P/26

Figure 26. Main Valve Bank Boom Valve

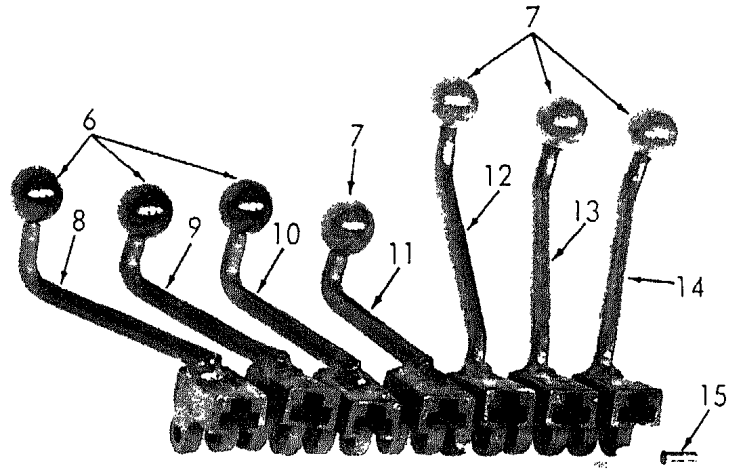

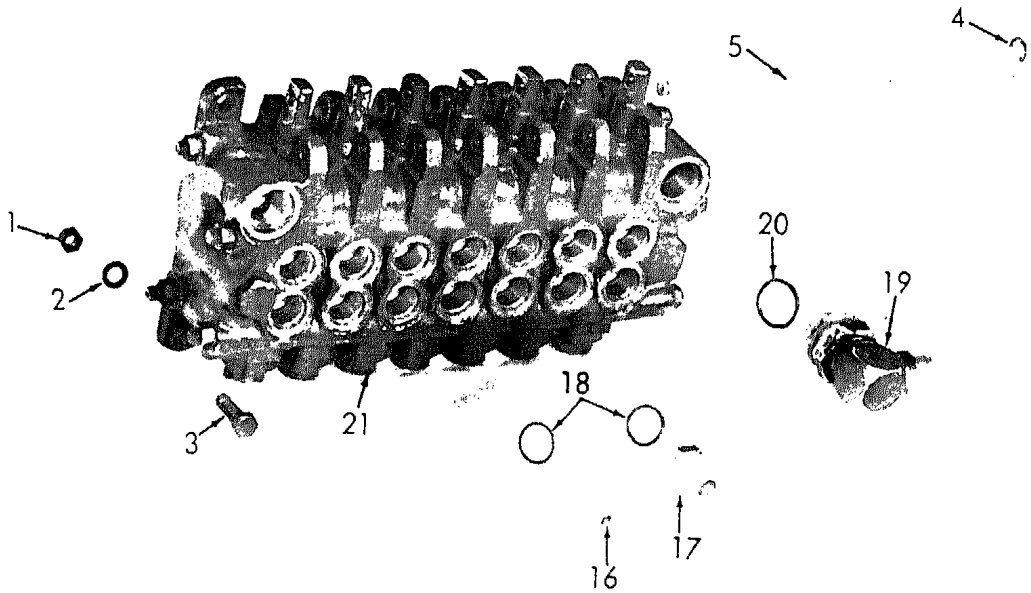

Figure 27. Outrigger Valve Bank

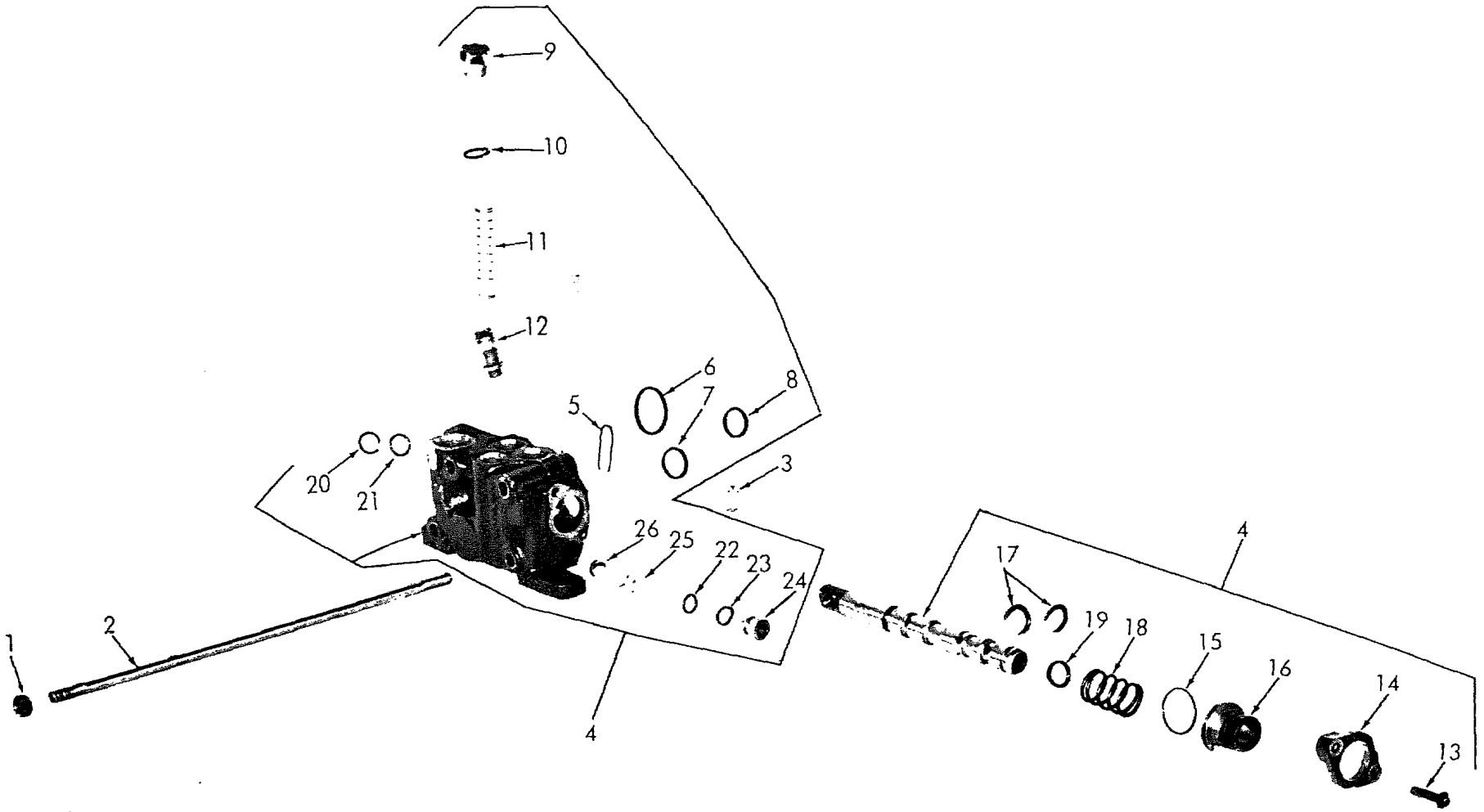

Figure 28. Outrigger Valve Bank Inlet Valve

ME 3810-290-34P-28

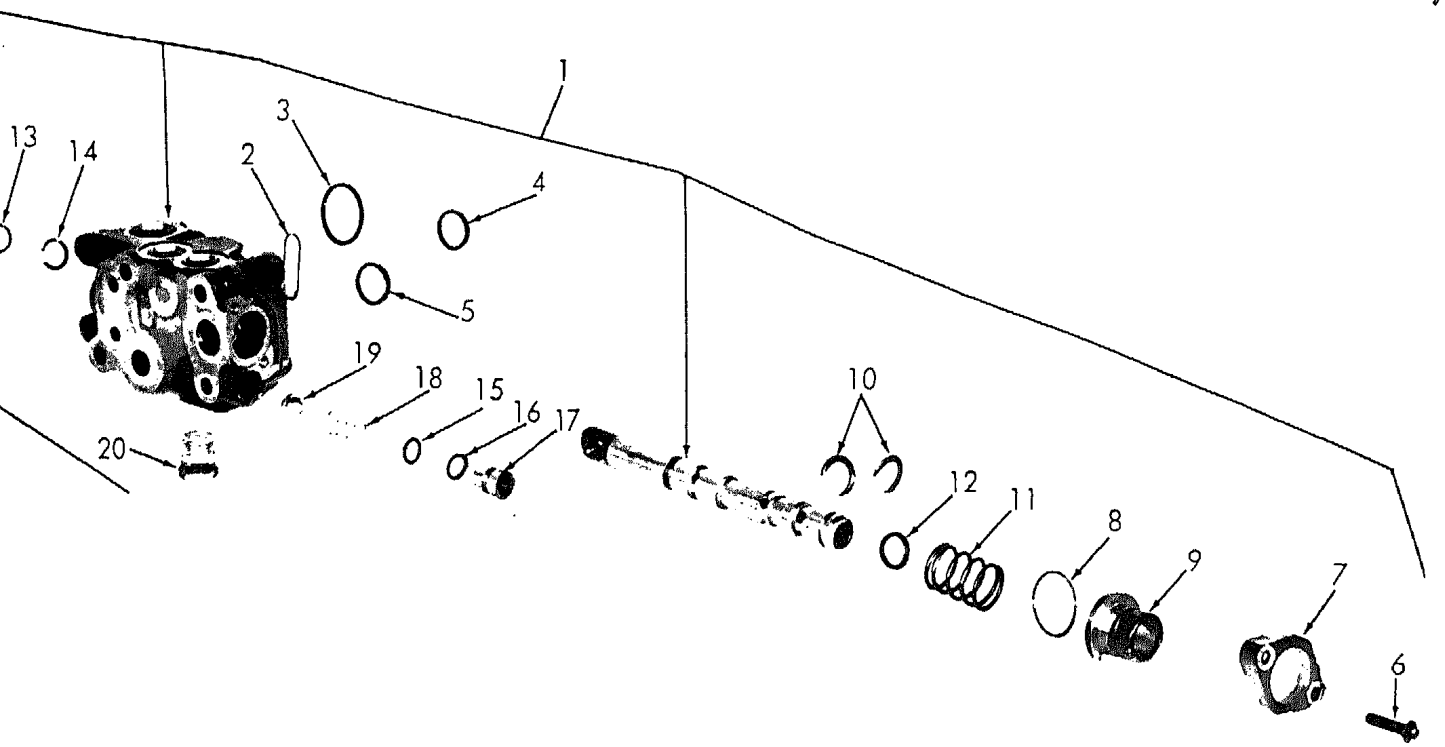

Figure 29. Outrigger Valve Bank Outlet Valve

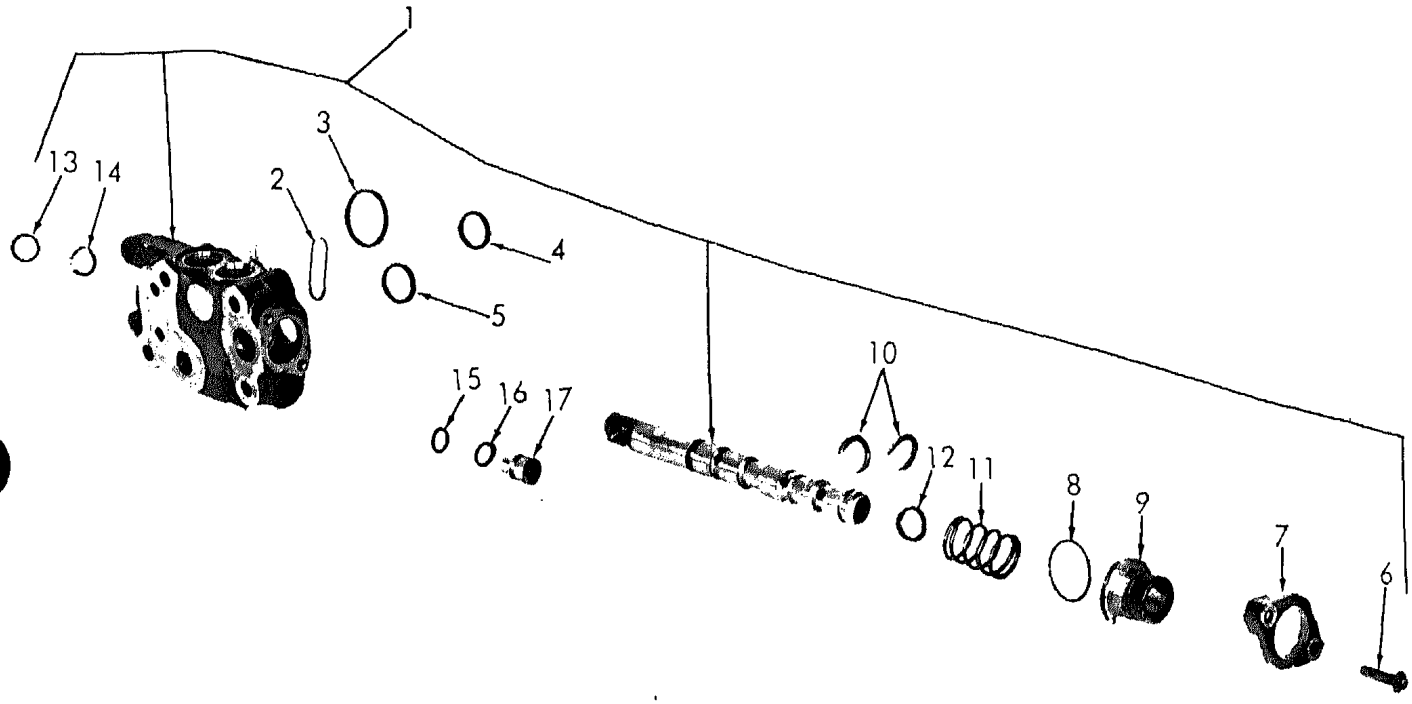

ME 3810-290-34P 30

Figure 30. Outrigger Valve Bank Swing Valve

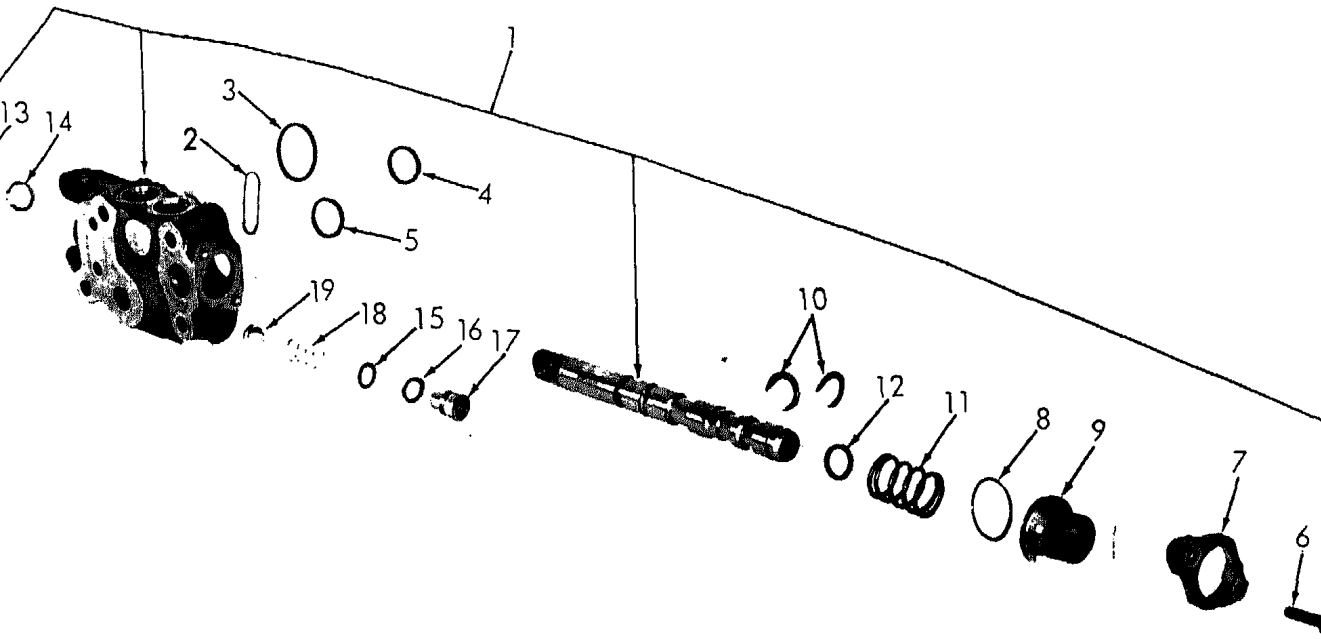

ME 3810-290-34P 31

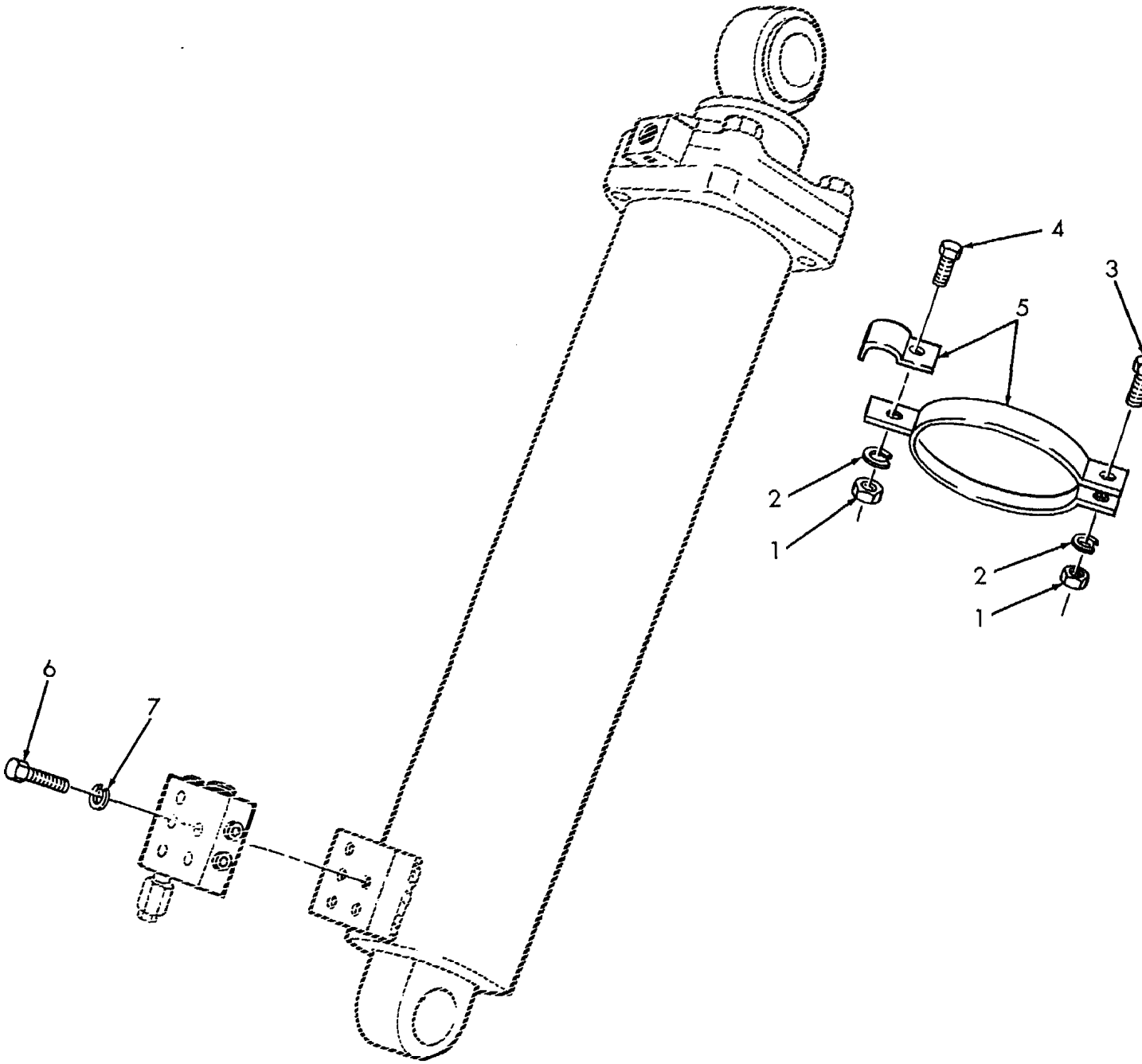

ME 3810-290-34P/32

Figure 32. Boom Hoist Valve Mountings

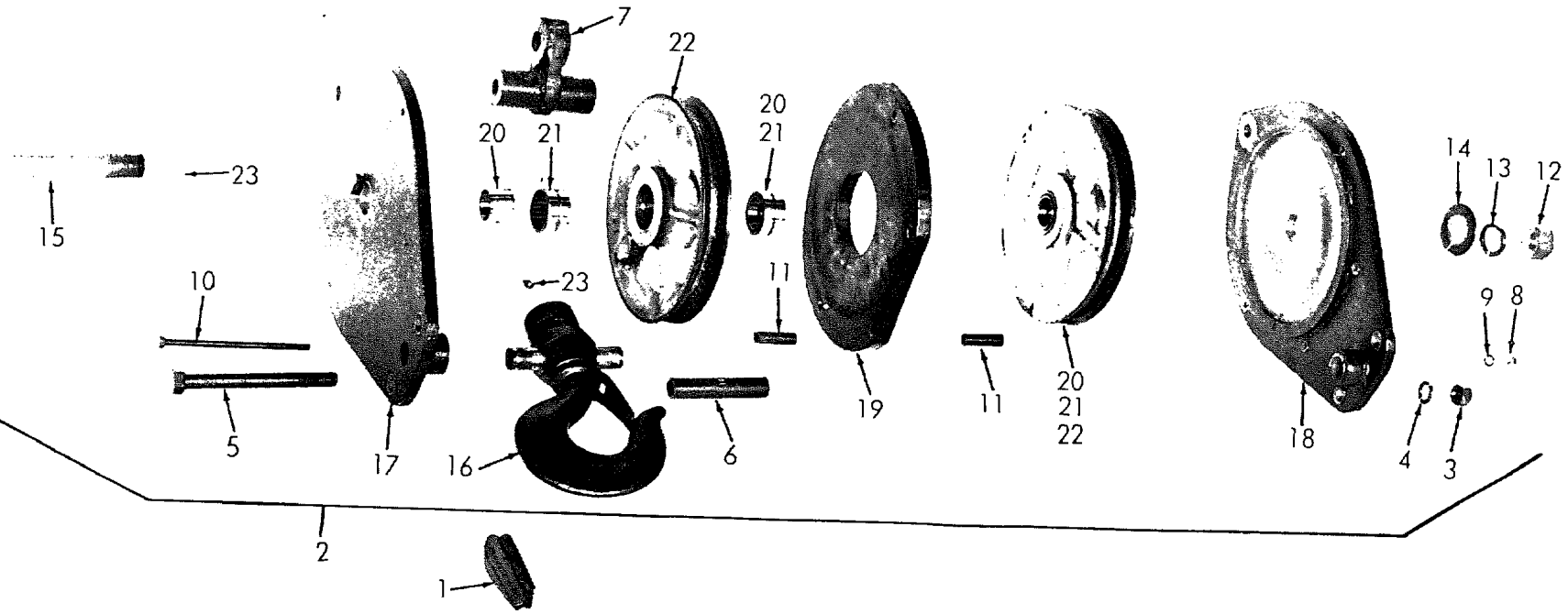

Figure 33. Block, Tackle

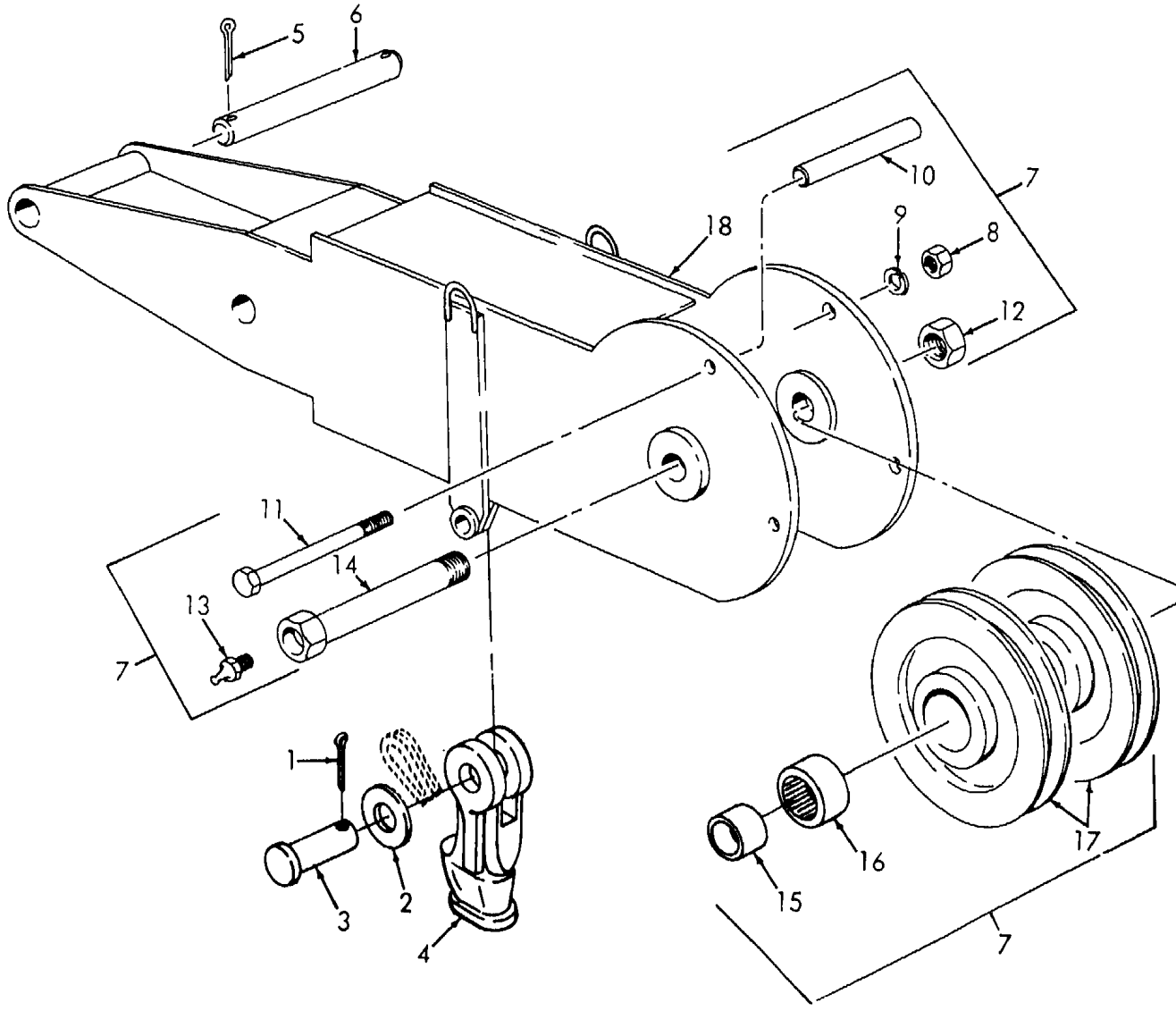

Figure 34. Boom Head

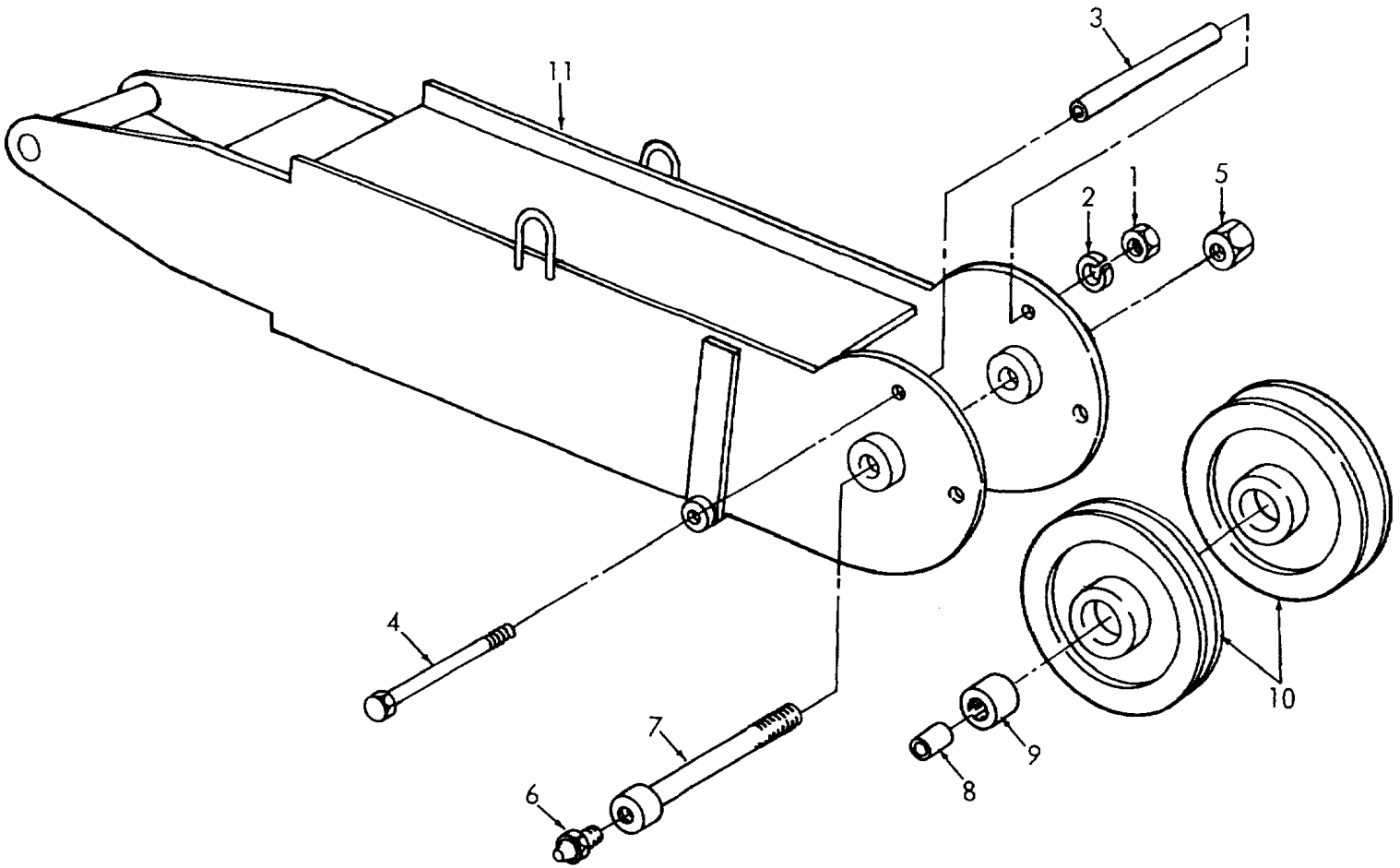

Figure 35. Boom Head Extension

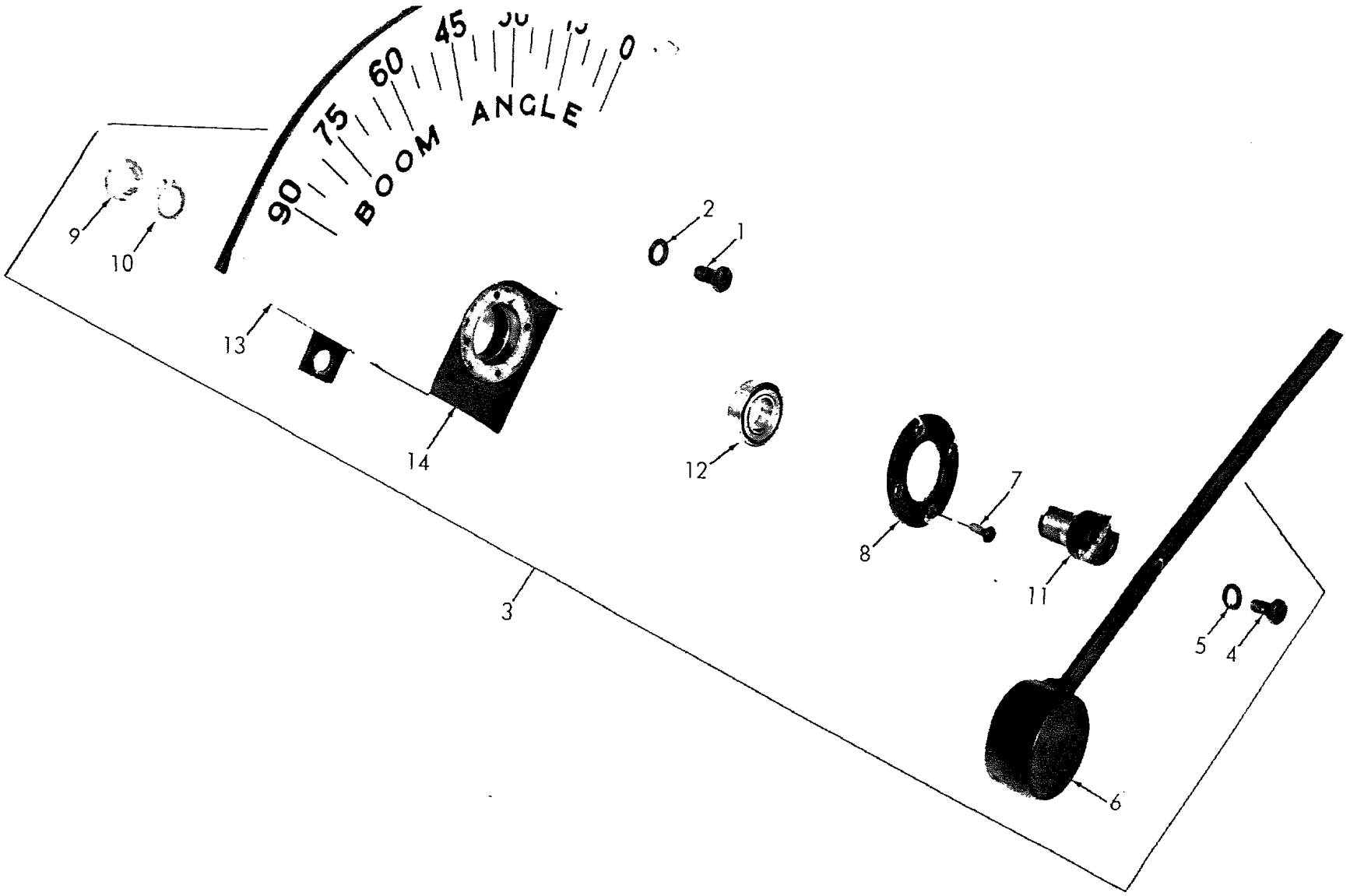

Figure 36. Boom Angle Indicator

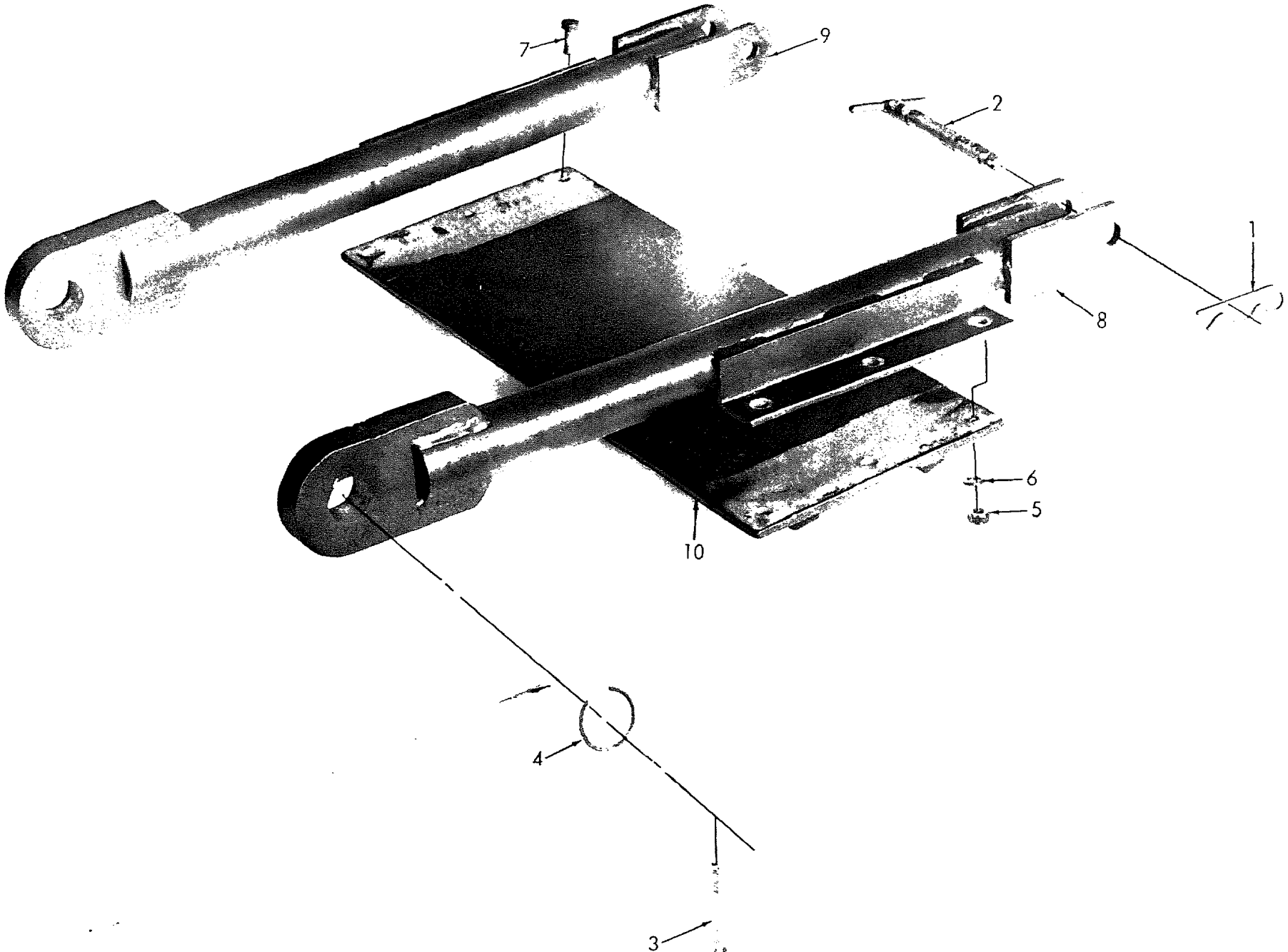

Figure 37. Anti-Rotation Arm

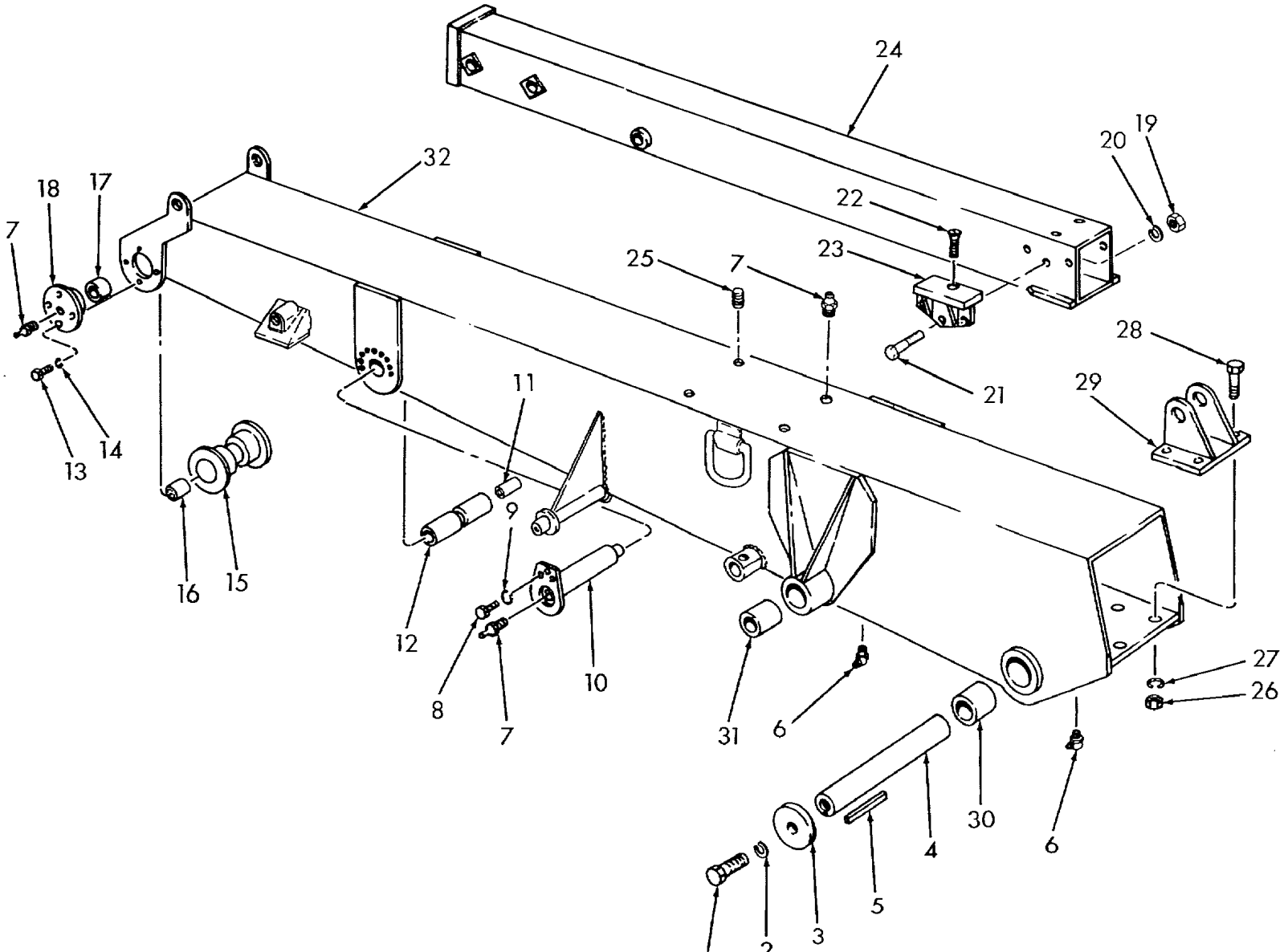
24
32
18
17
7
22
20
19
23
25
7
28
21
29
11
13
14
9
16
15
12
10
8
7
31
6
27
26
30
6
4
5
3
2

Figure 39. Hoist Drive Motor

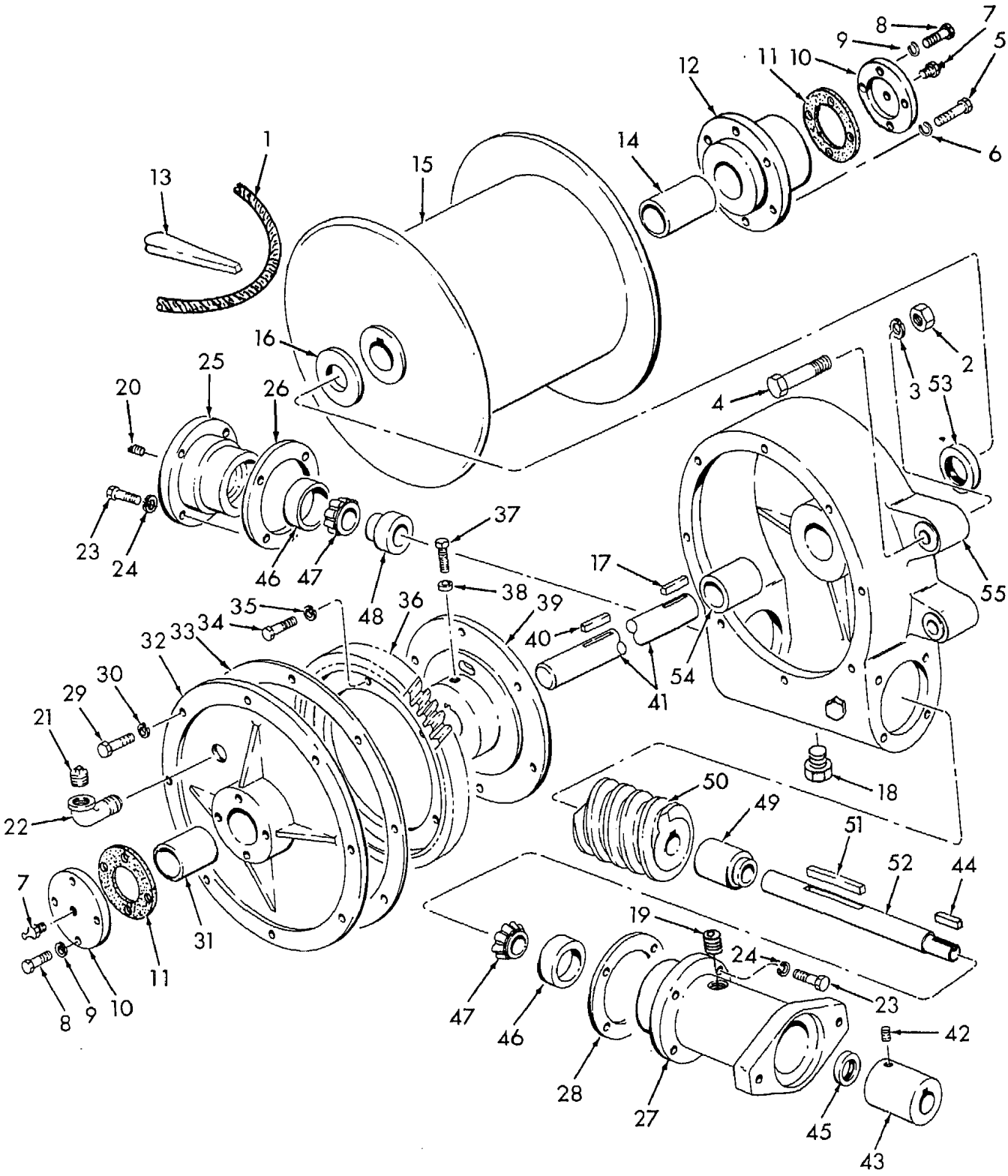

ME 3810-290-34P/40

Figure 40. Hoist Gear Box

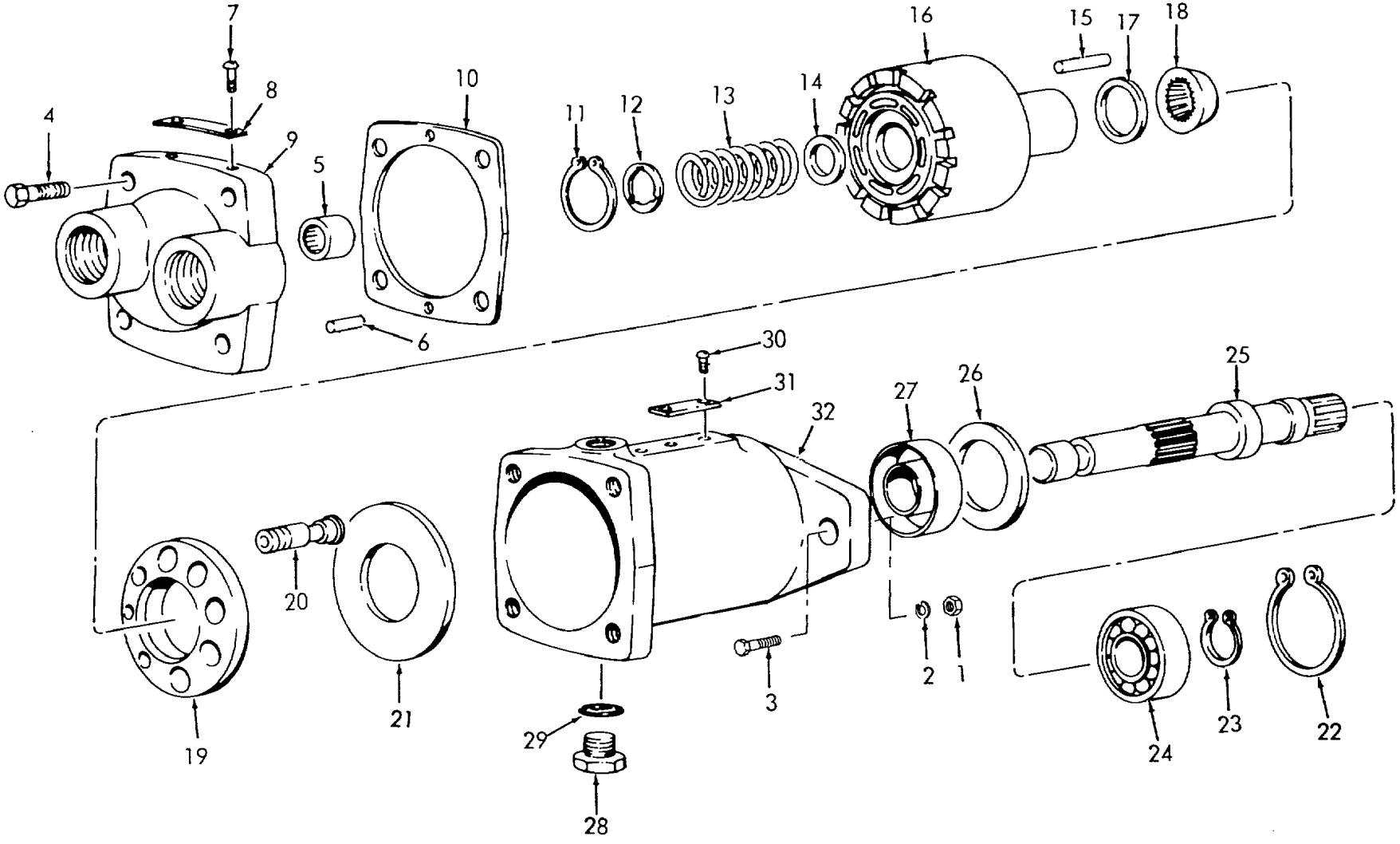

Figure 41. Swing Drive Motor

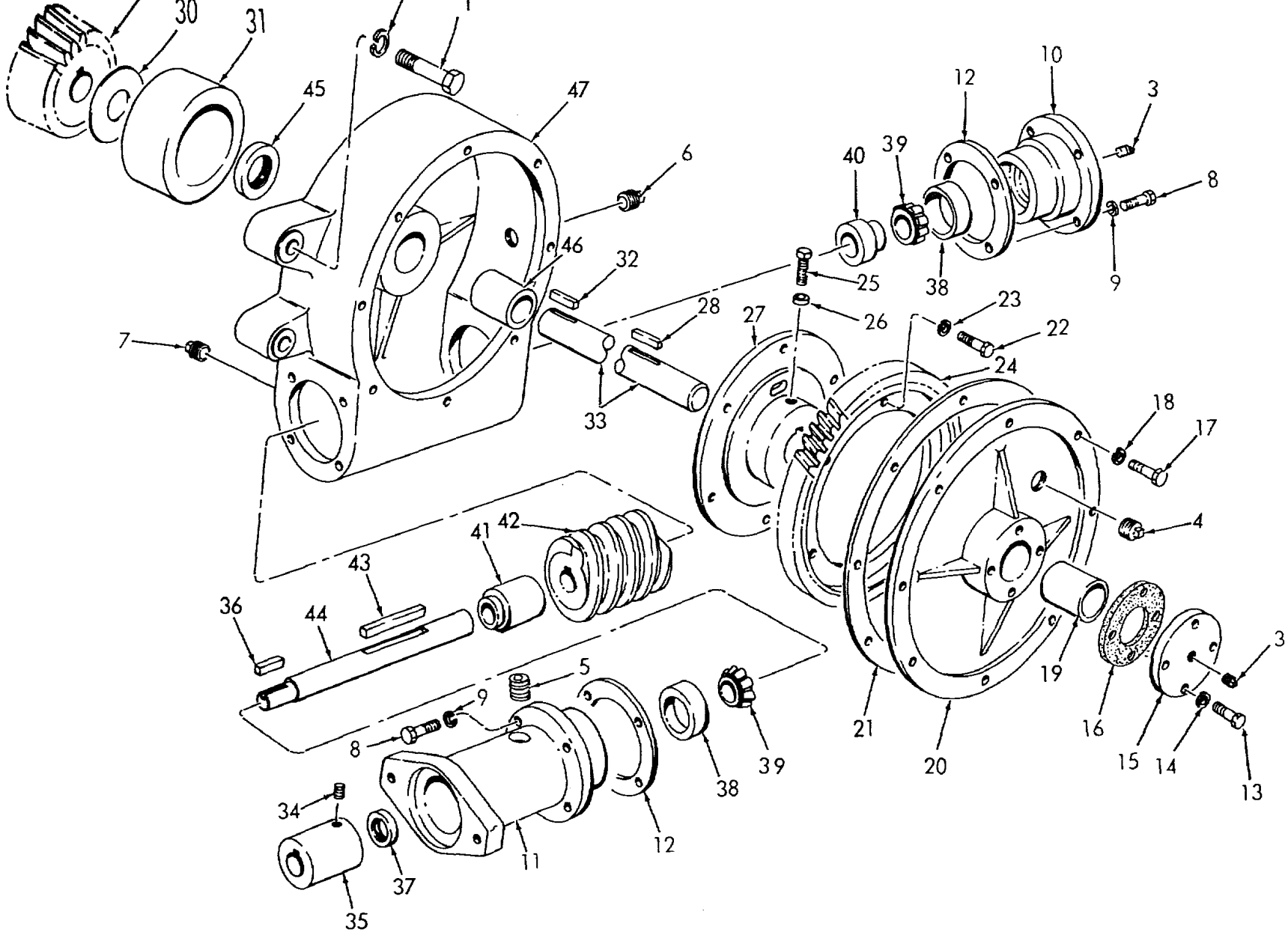

Figure 42. Swing Gear Box

ME 3810-290-34P/42

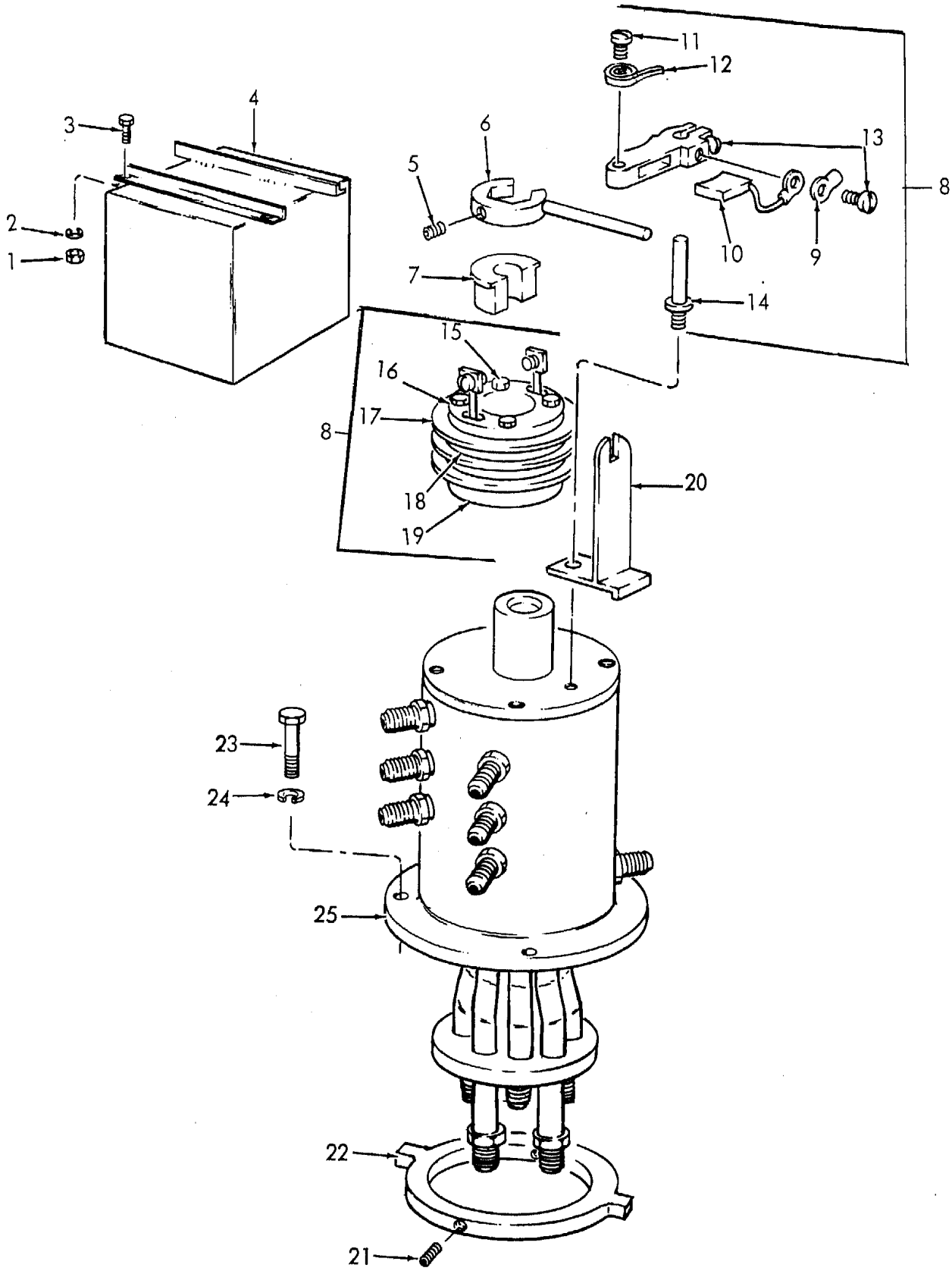

Figure 43. Rotary Seal, Superstructure

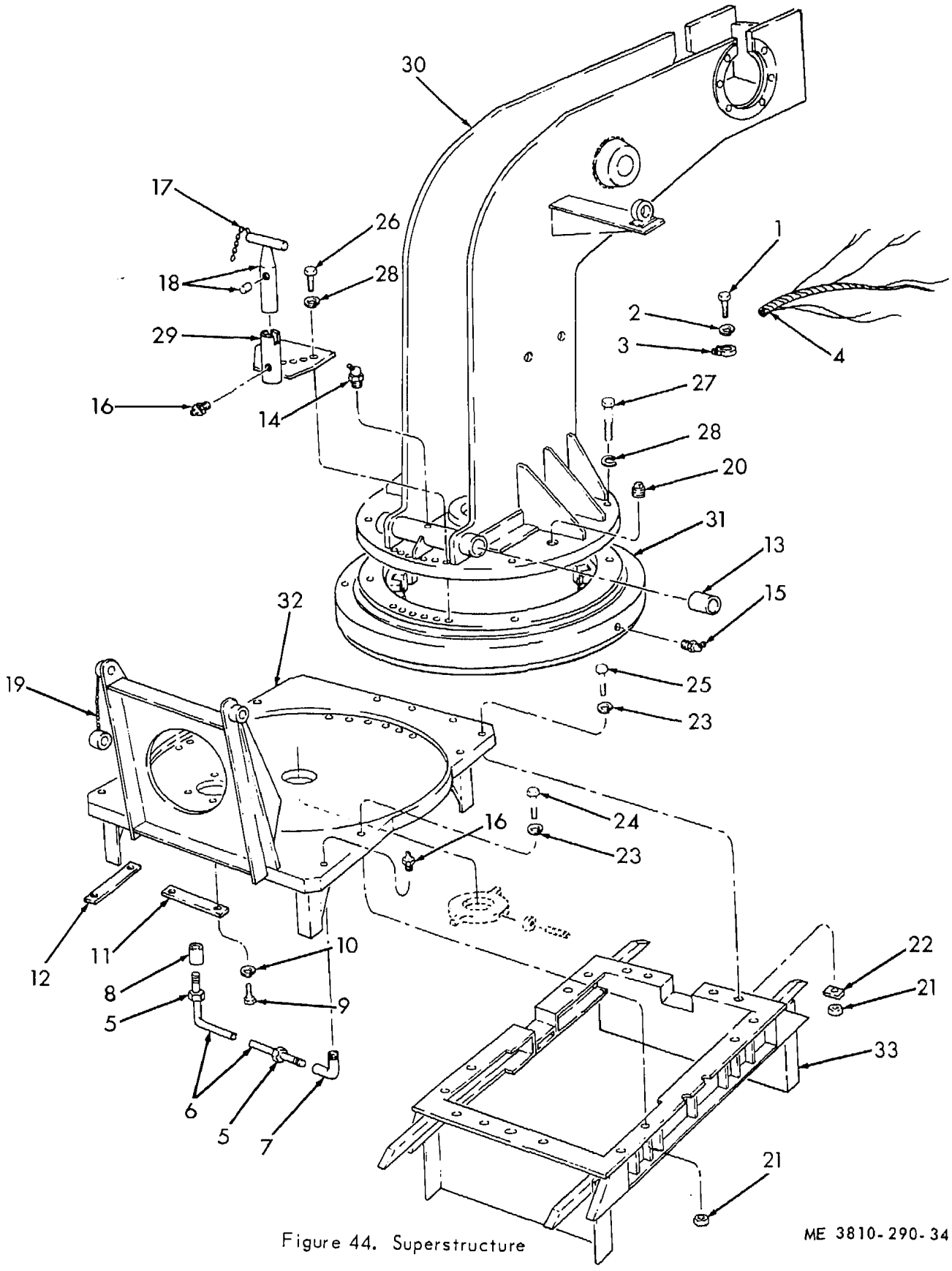

Figure 44. Superstructure

ME 3810-290-34F

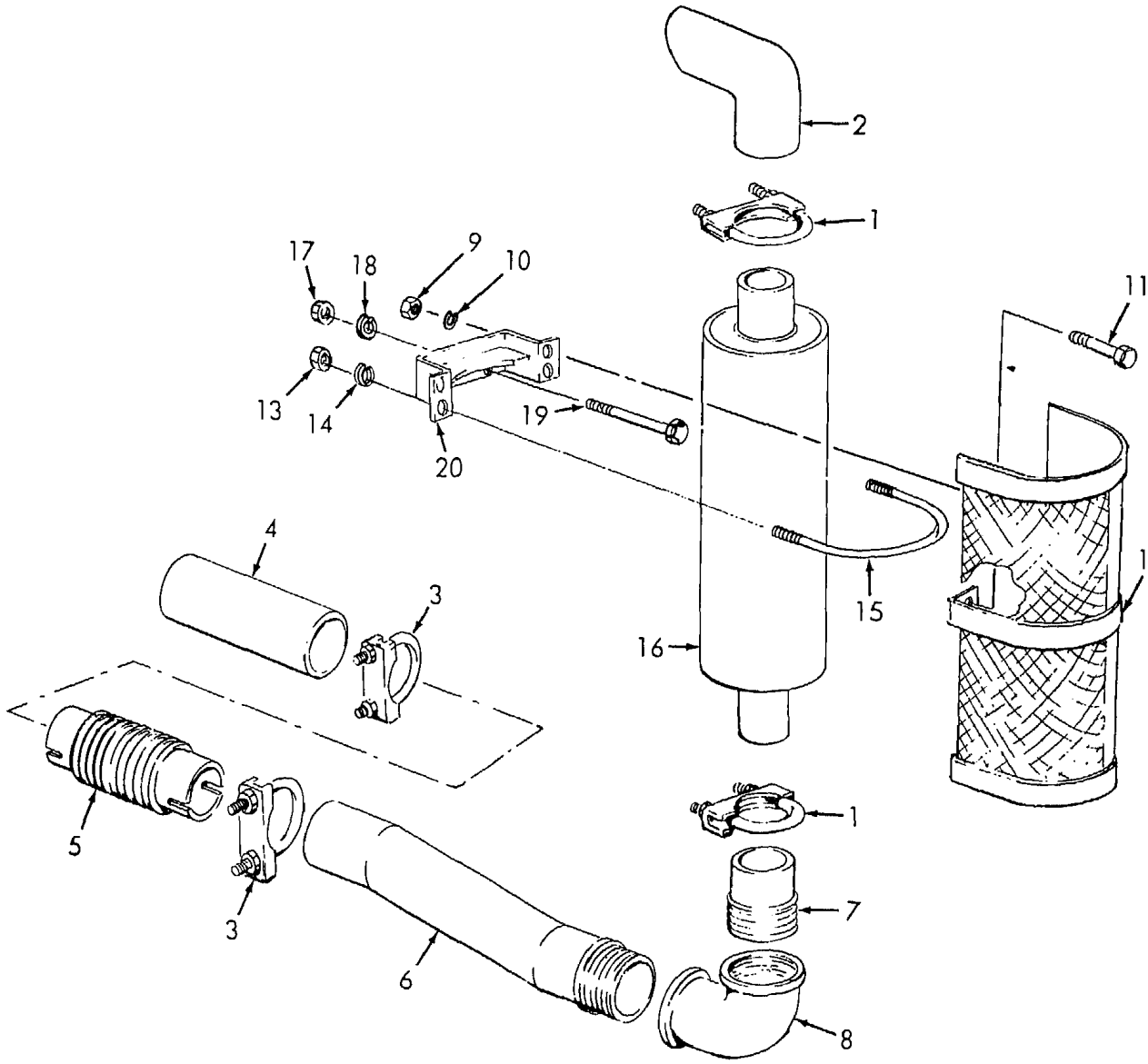

Figure 45. Muffler and Pipes

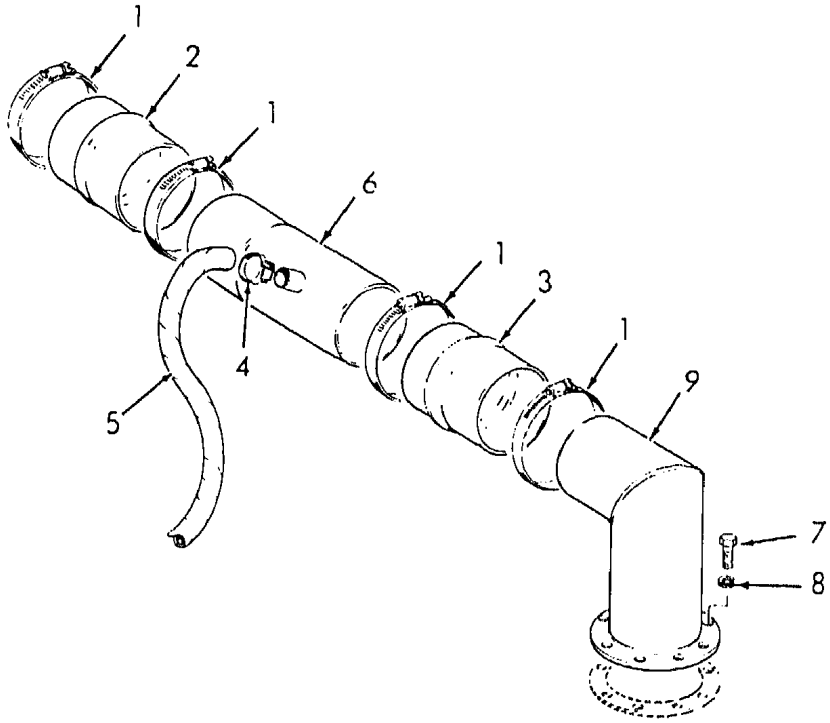

Figure 46. Air Intake

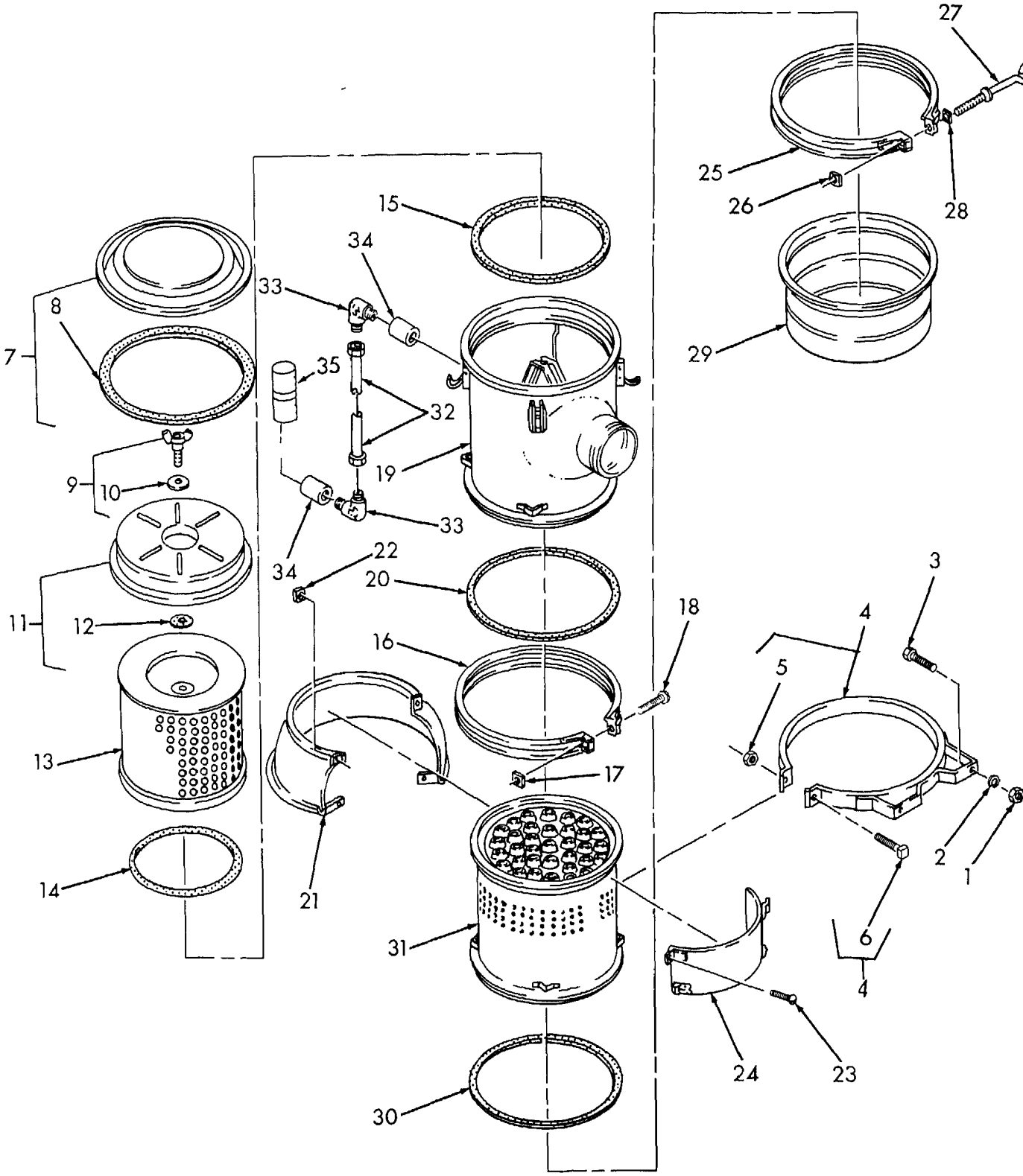

ME 3810-290-34P/4

Figure 47. Air Cleaner

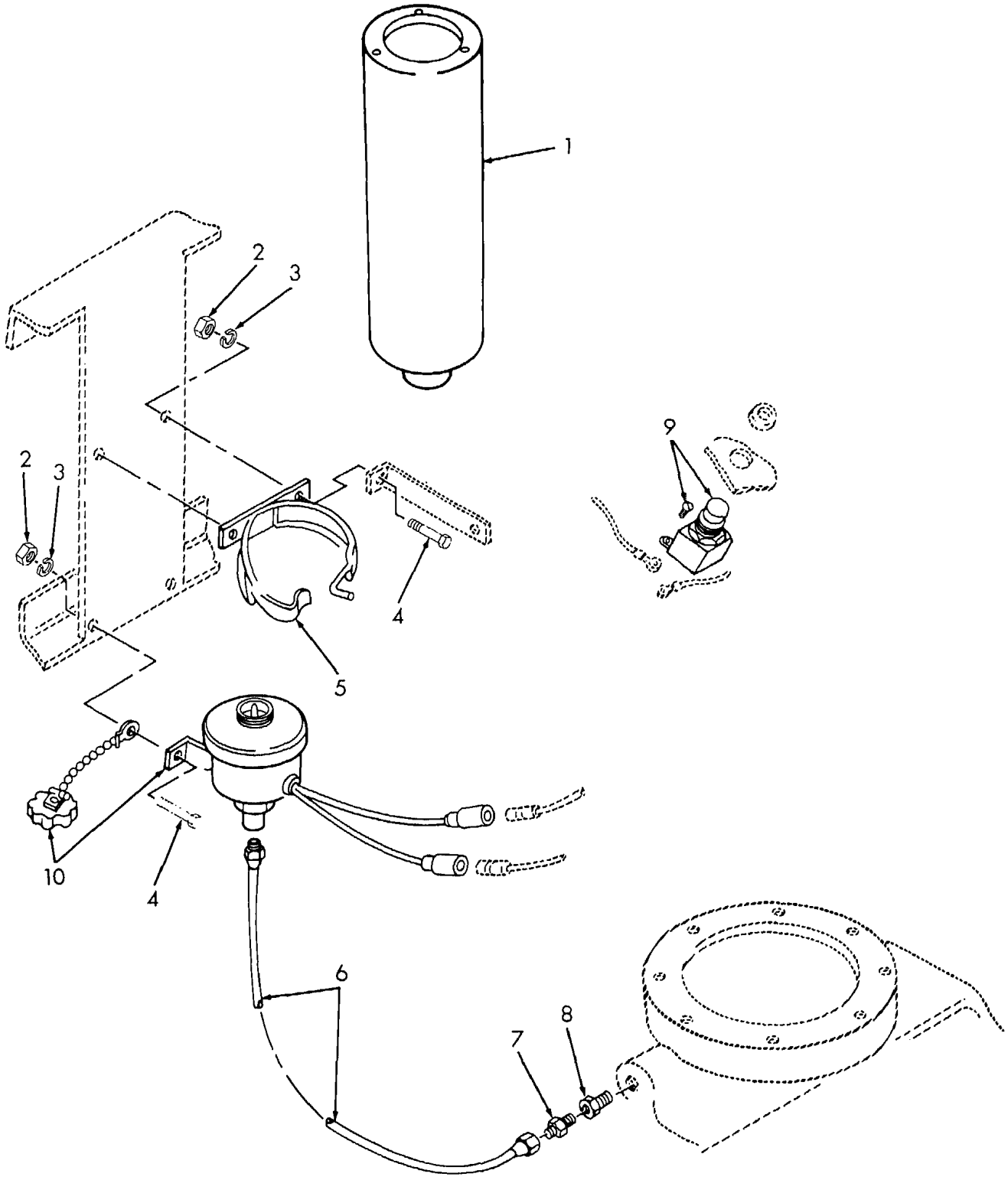

Figure 48. Ether Start

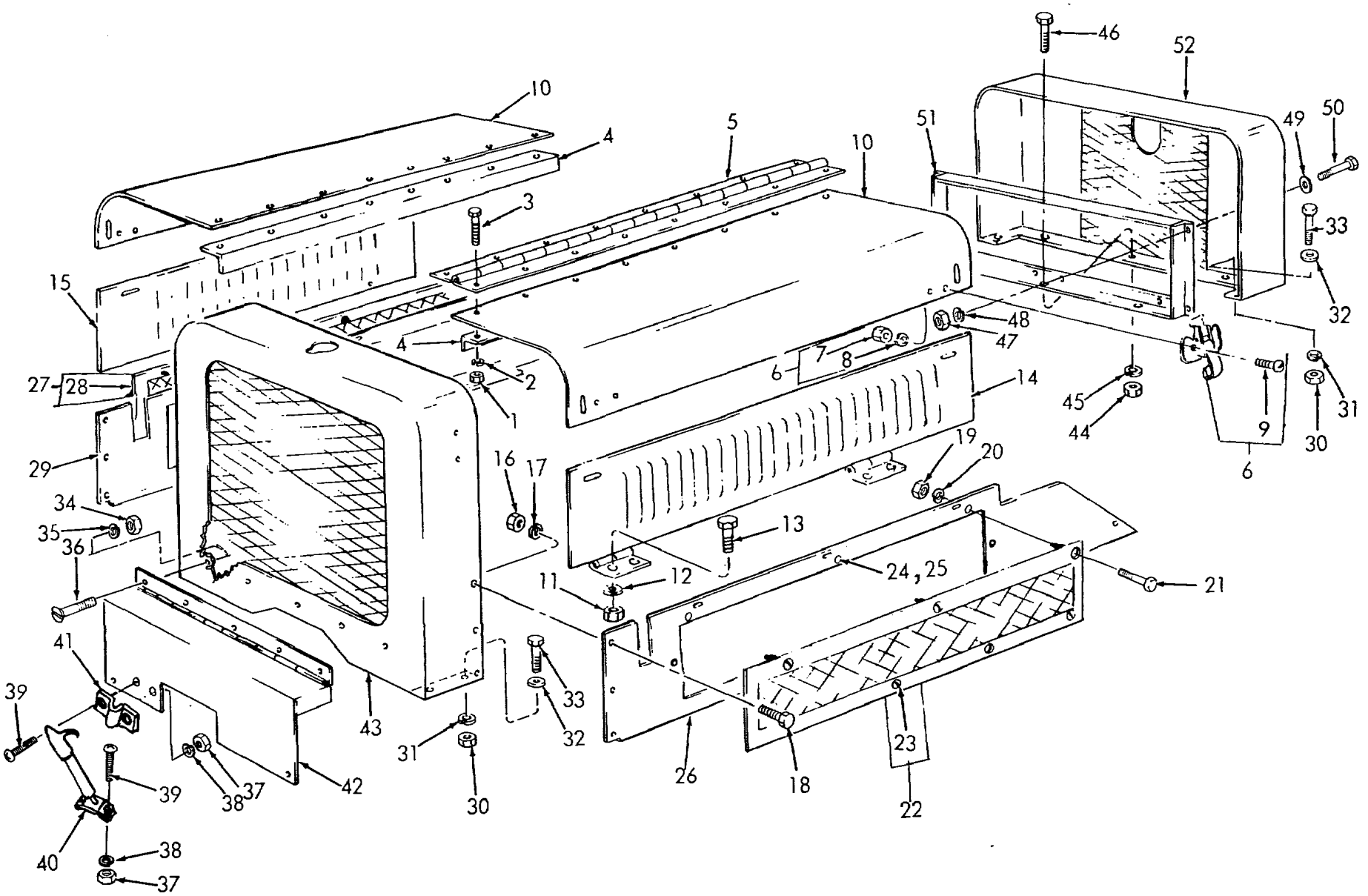

Figure 49. Engine Cowling

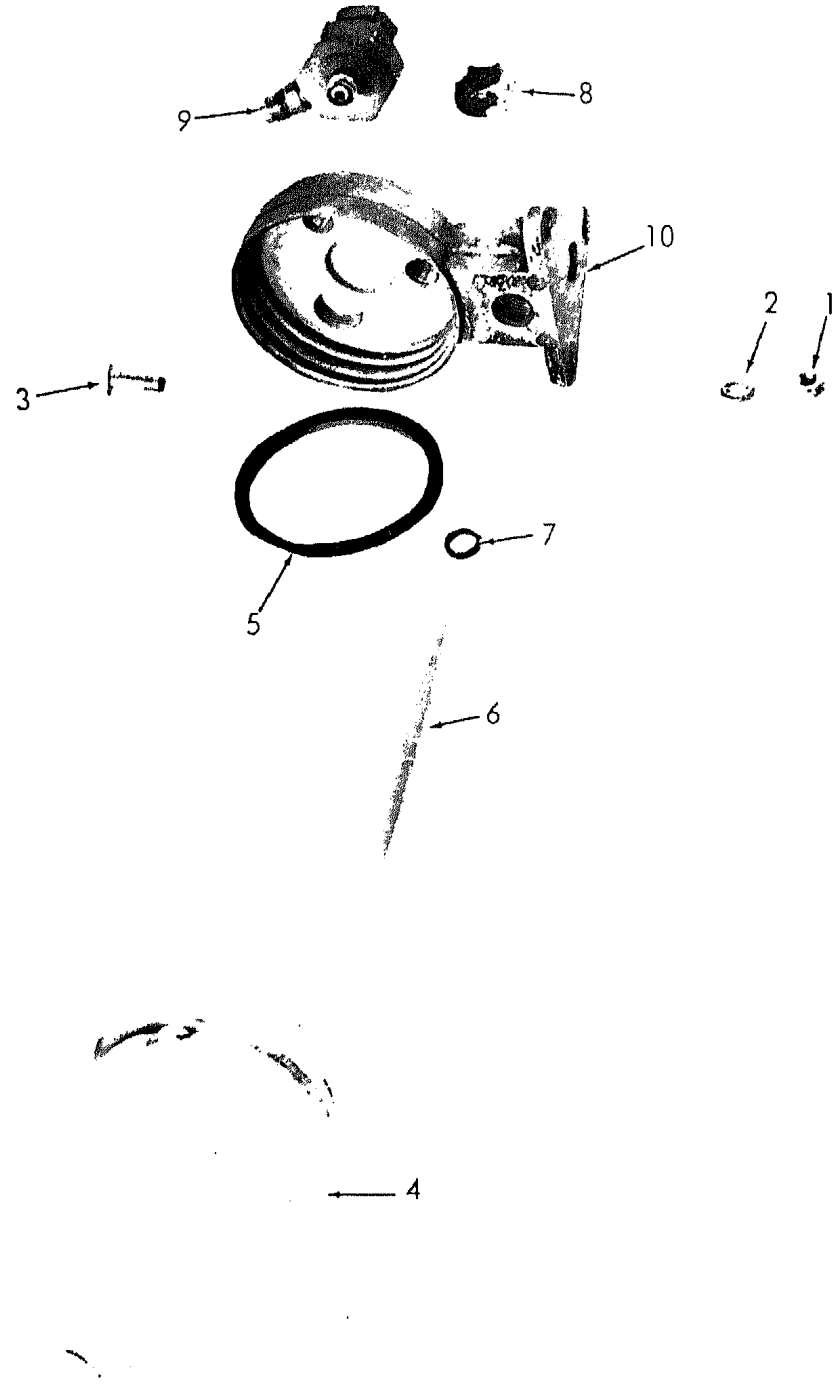

Figure 50. Alcohol Evaporator

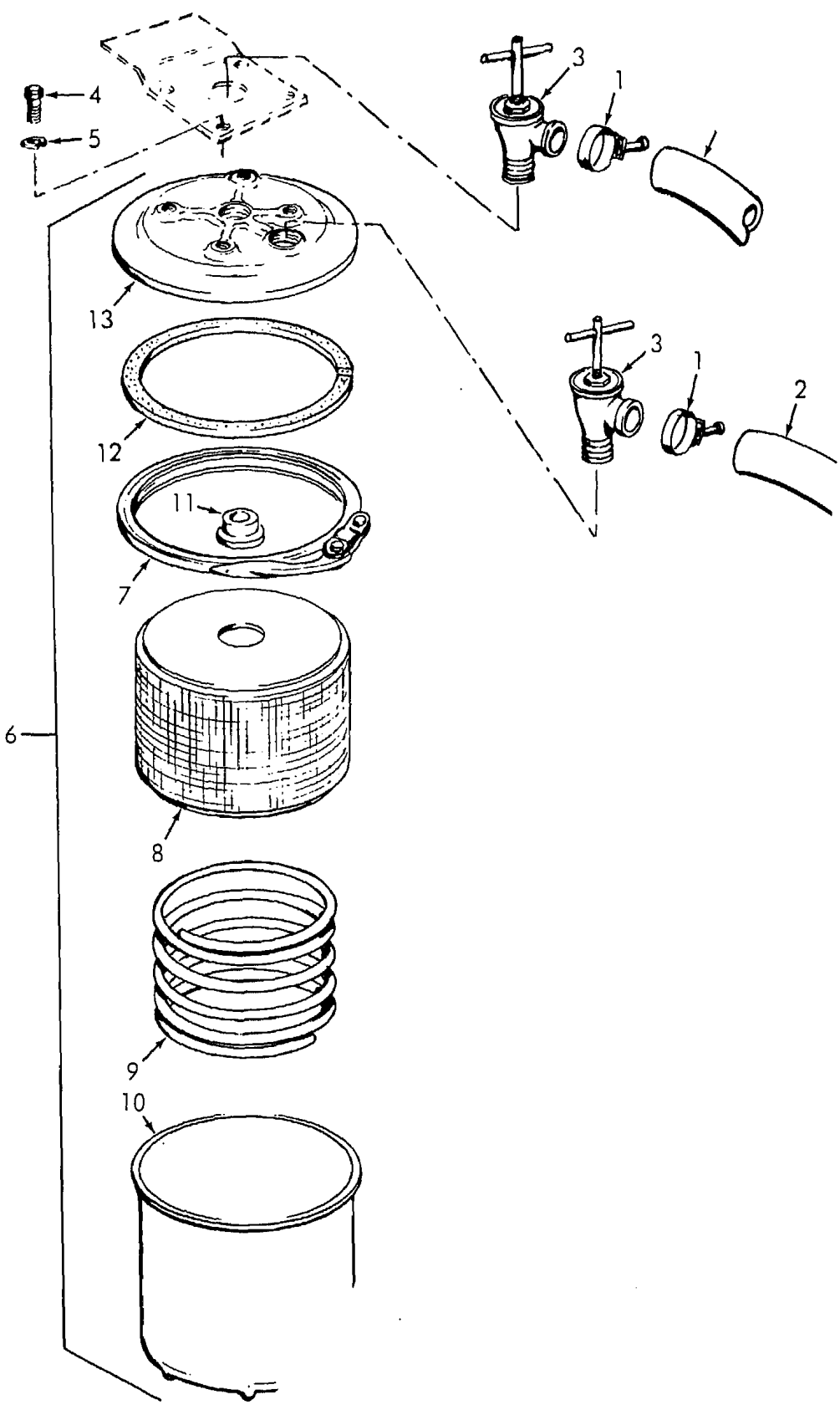

Figure 51. Water Filter

ME 3810-290-34P/51

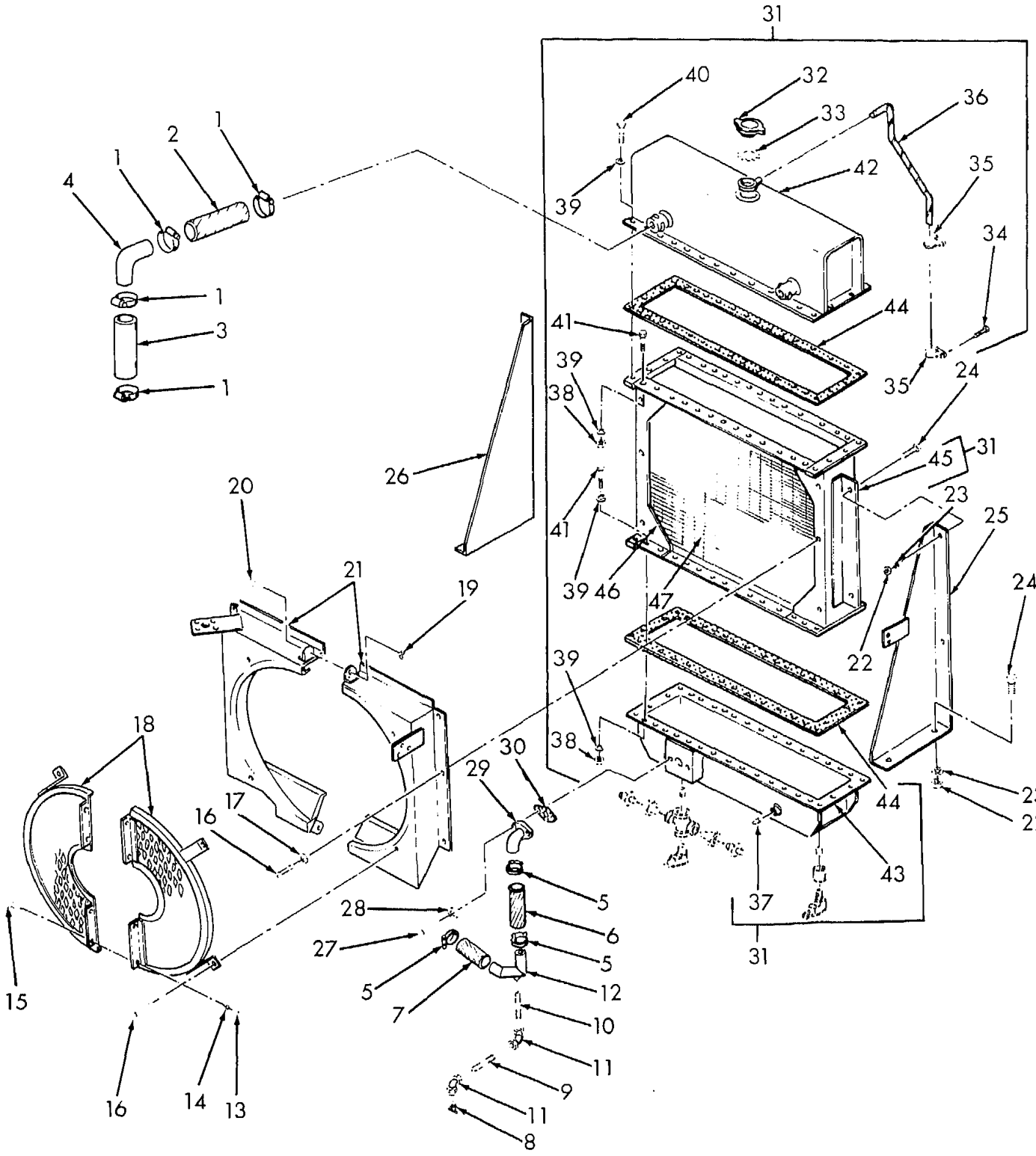

Figure 52. Radiator and Related Parts

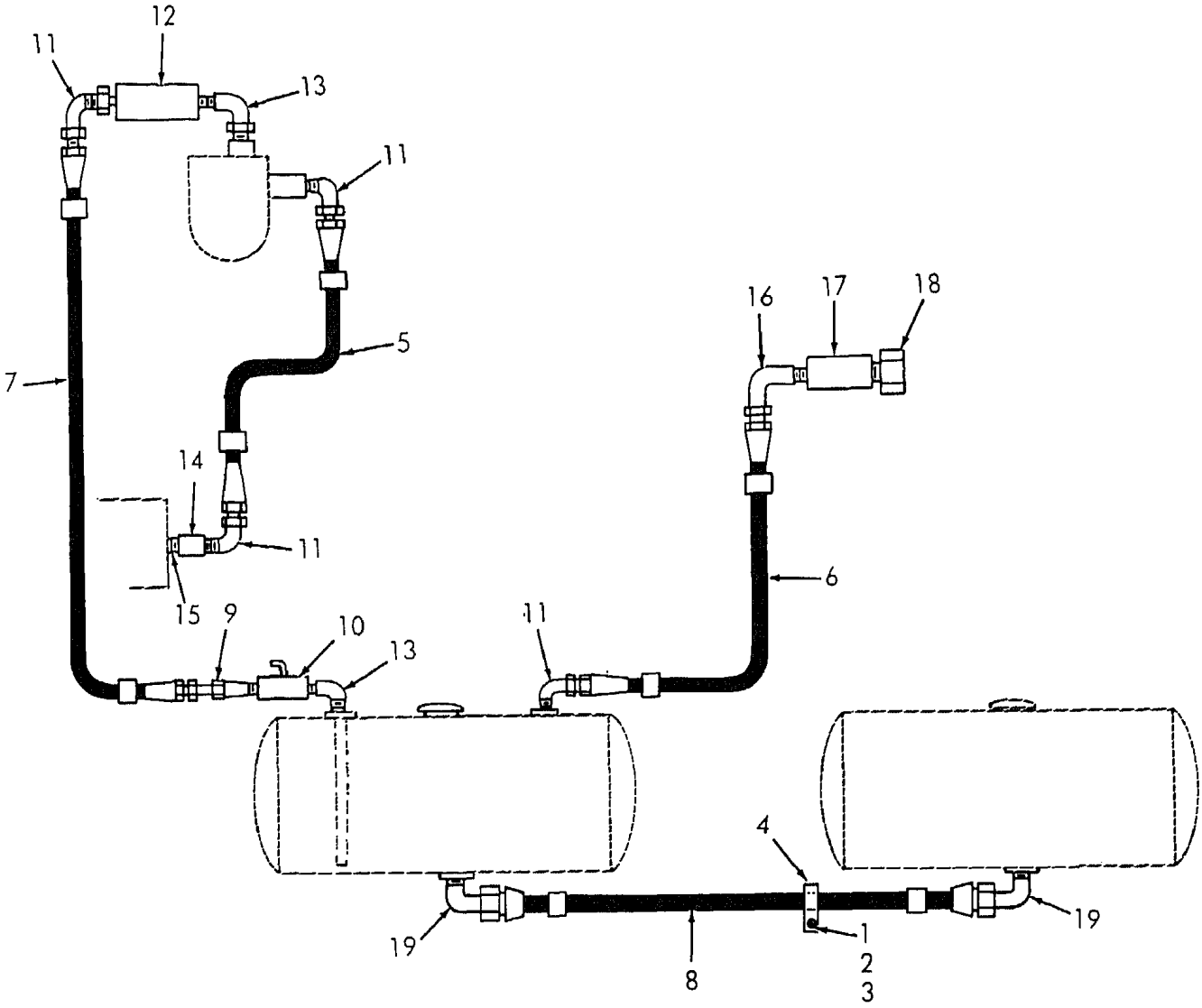

Figure 53. Fuel Lines

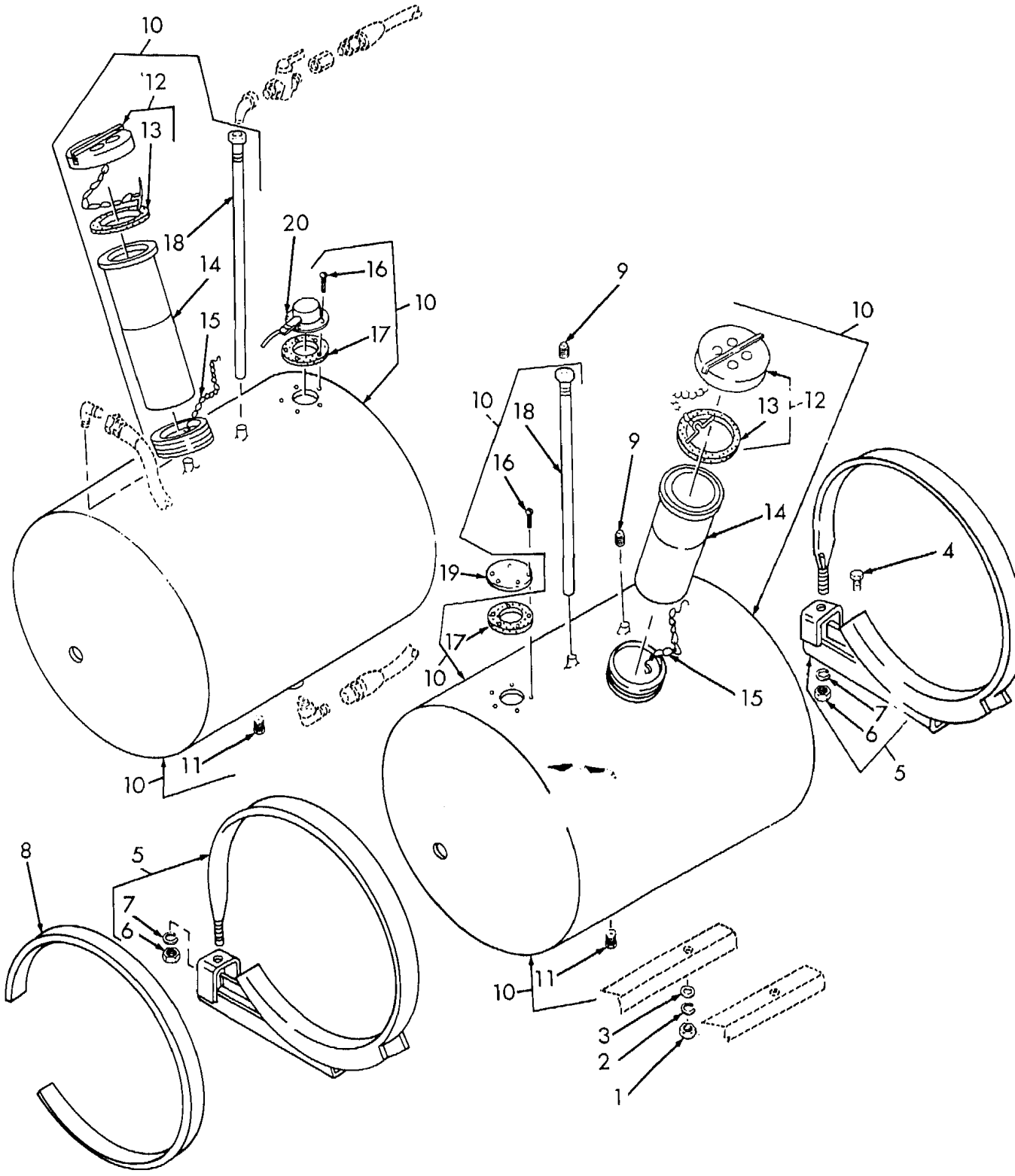

Figure 54. Fuel Tanks

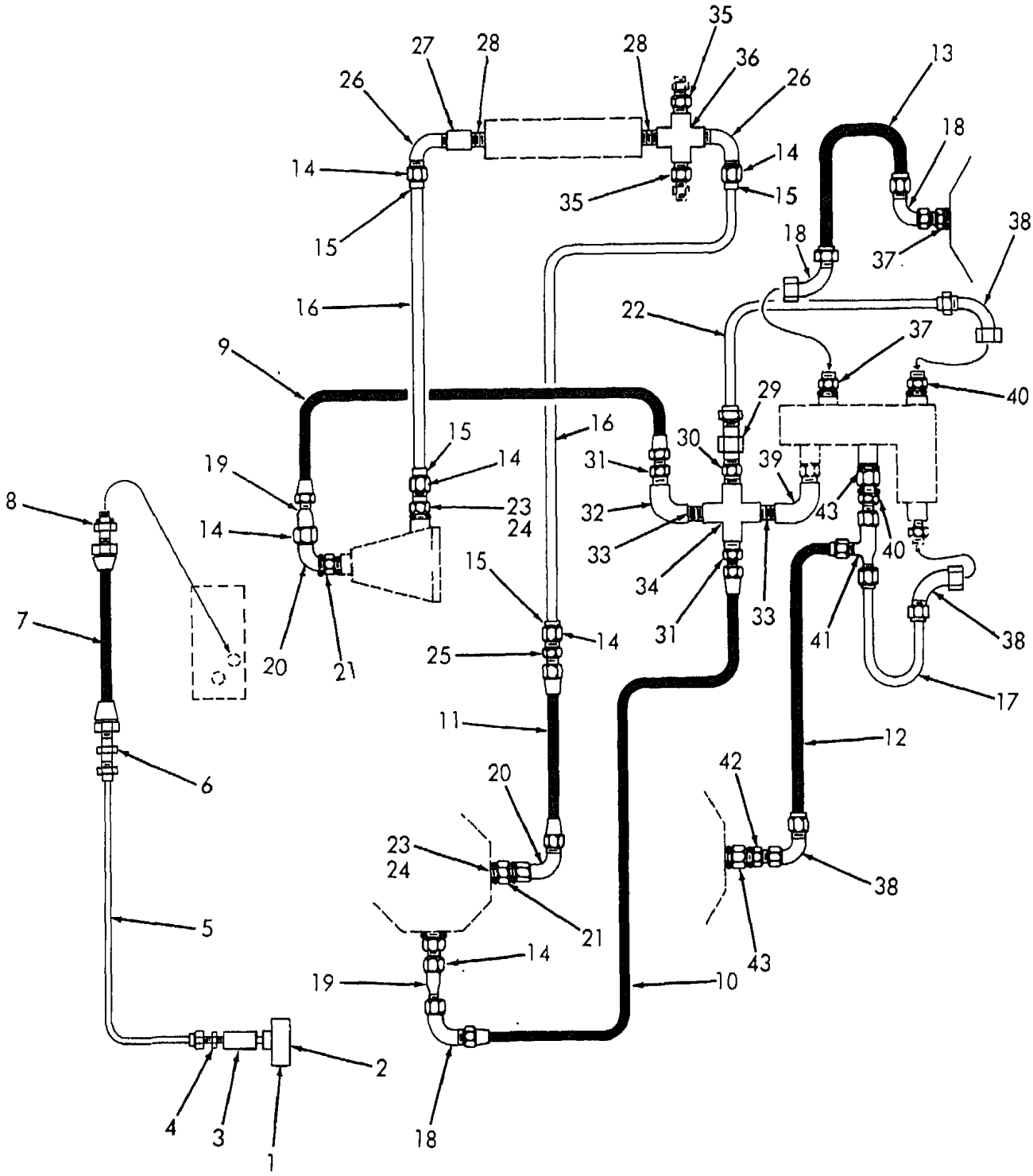

ME 3810-290-34P/55

Figure 55. Transmission Lines and Fittings

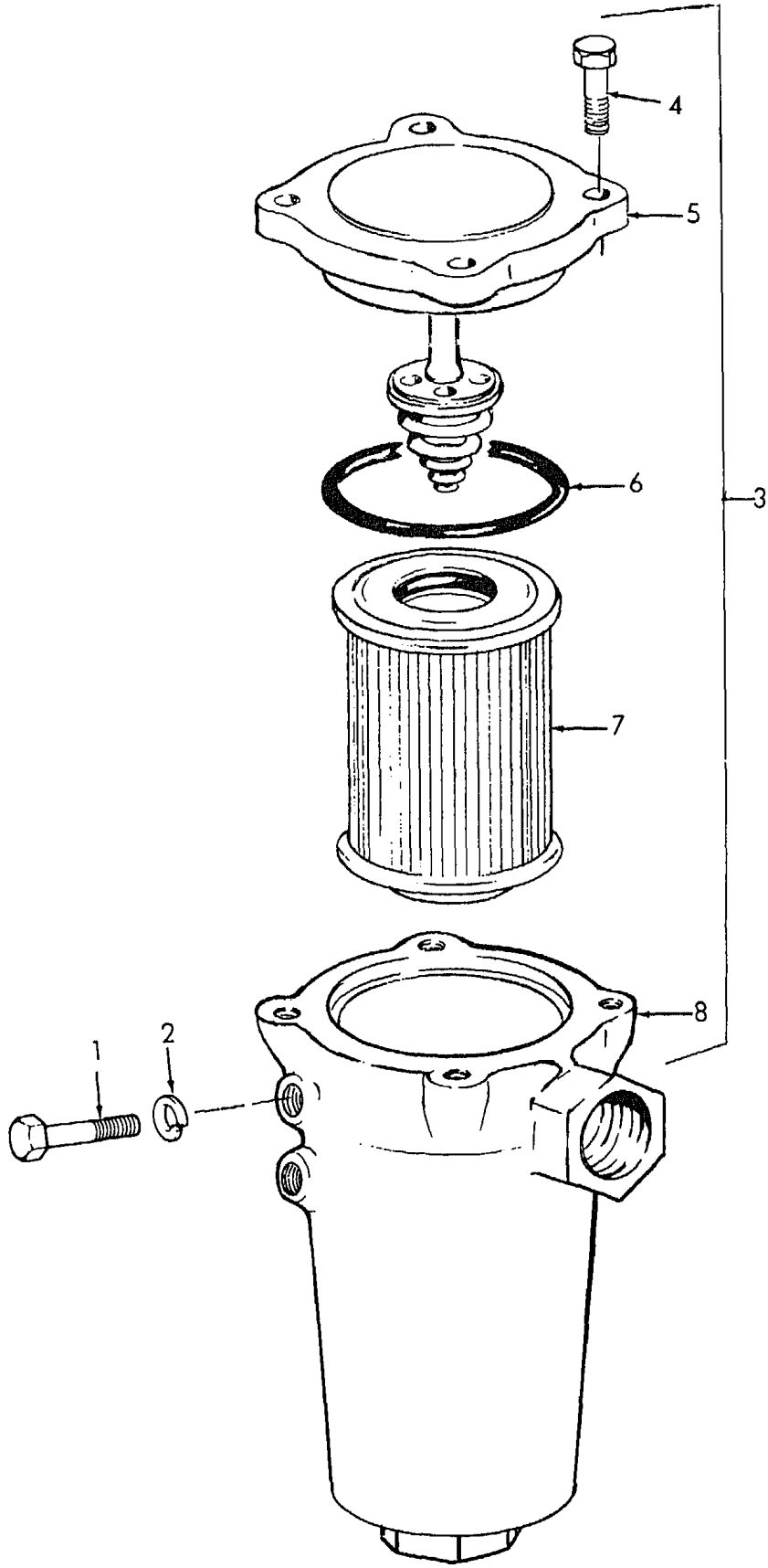

Figure 56. Transmission Oil Filter

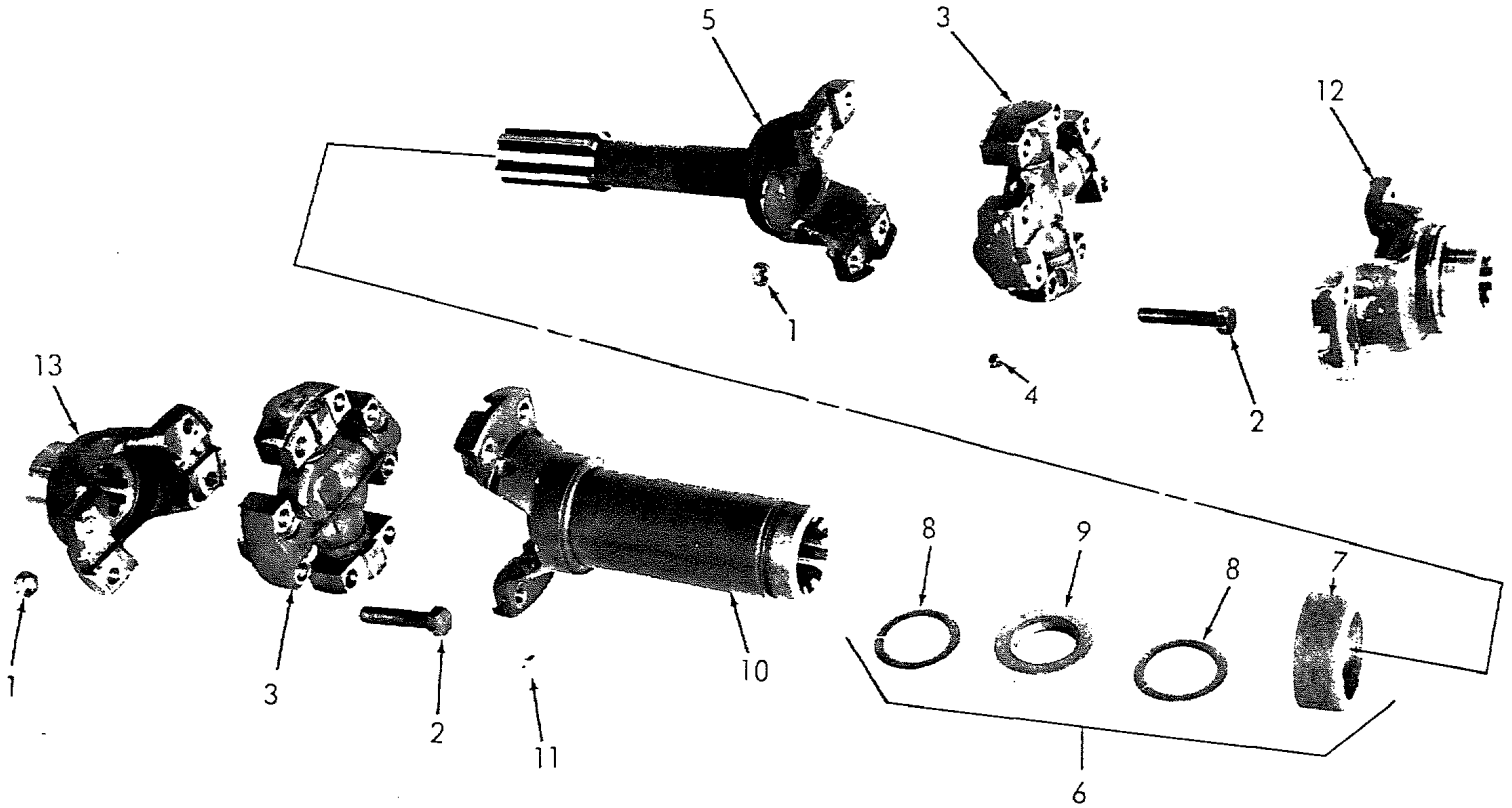

Figure 57. Drive Shafts

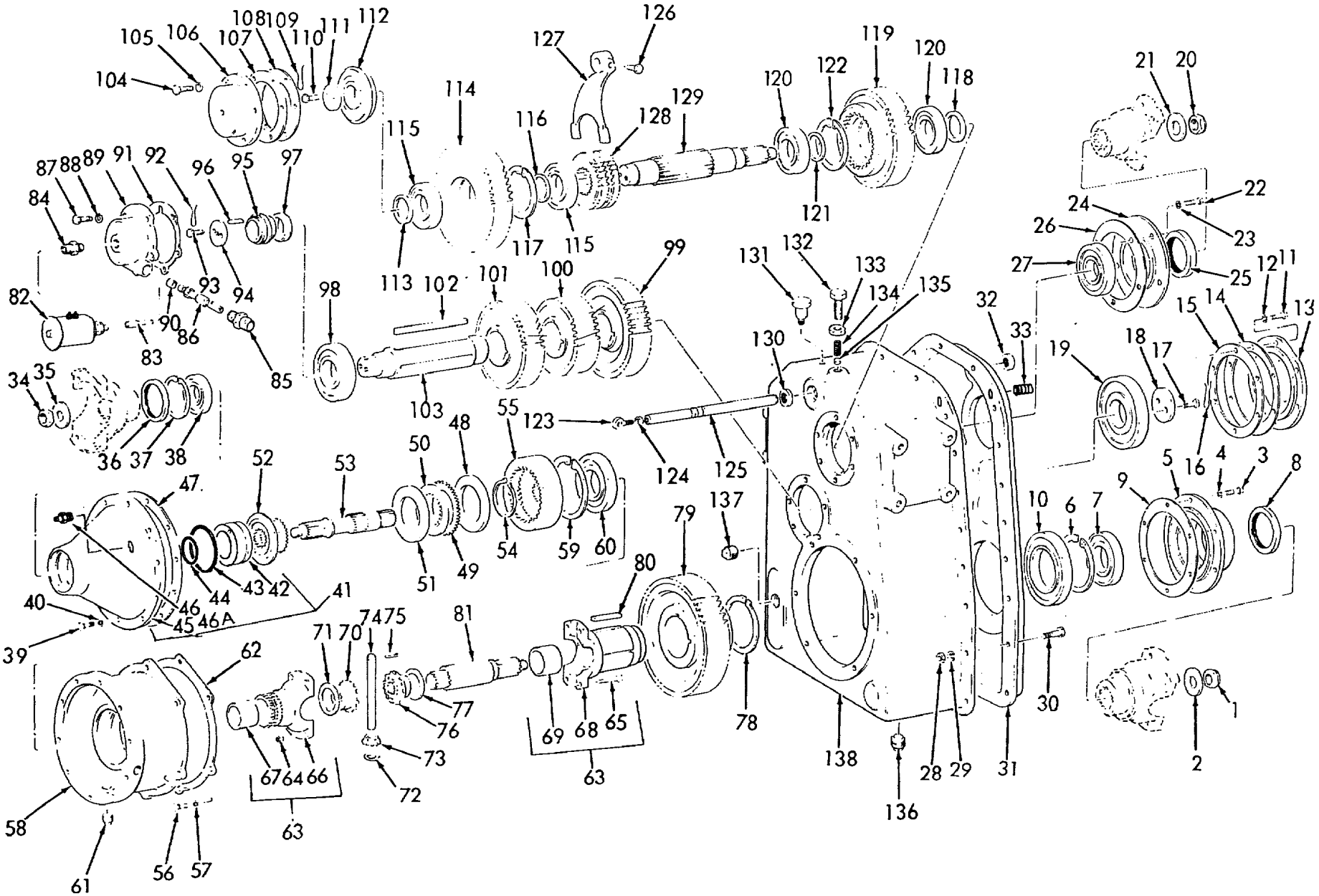

104
105
106
107
108
109
110
111
112
113
114
115
116
117
118
119
120
121
122
123
124
125
126
127
128
129
130
131
132
133
134
135
136
137
138
1
2
3
4
5
6
7
8
9
10
11
12
13
14
15
16
17
18
19
20
21
22
23
24
25
26
27
28
29
30
31
32
33
34
35
36
37
38
39
40
41
42
43
44
45
46
46A
47
48
49
50
51
52
53
54
55
59
60
61
62
63
64
65
66
67
68
69
70
71
72
73
74
75
76
77
78
79
80
81
82
83
84
85
86
87
88
89
90
91
92
93
94
95
96
97
98
99
100
101
102
103

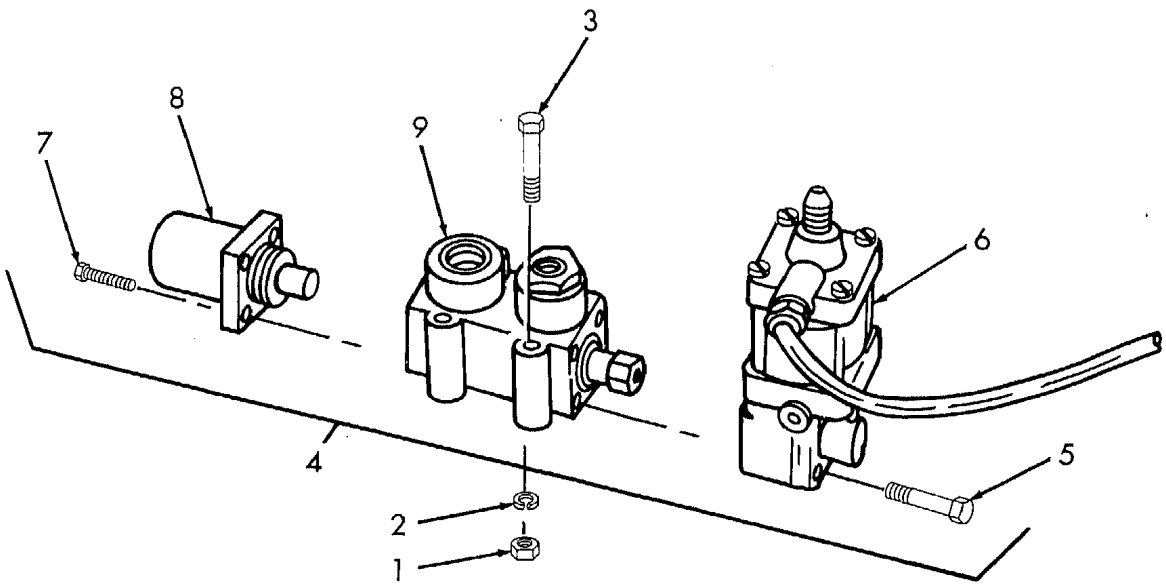

Figure 59. Transmission Solenoid Valve

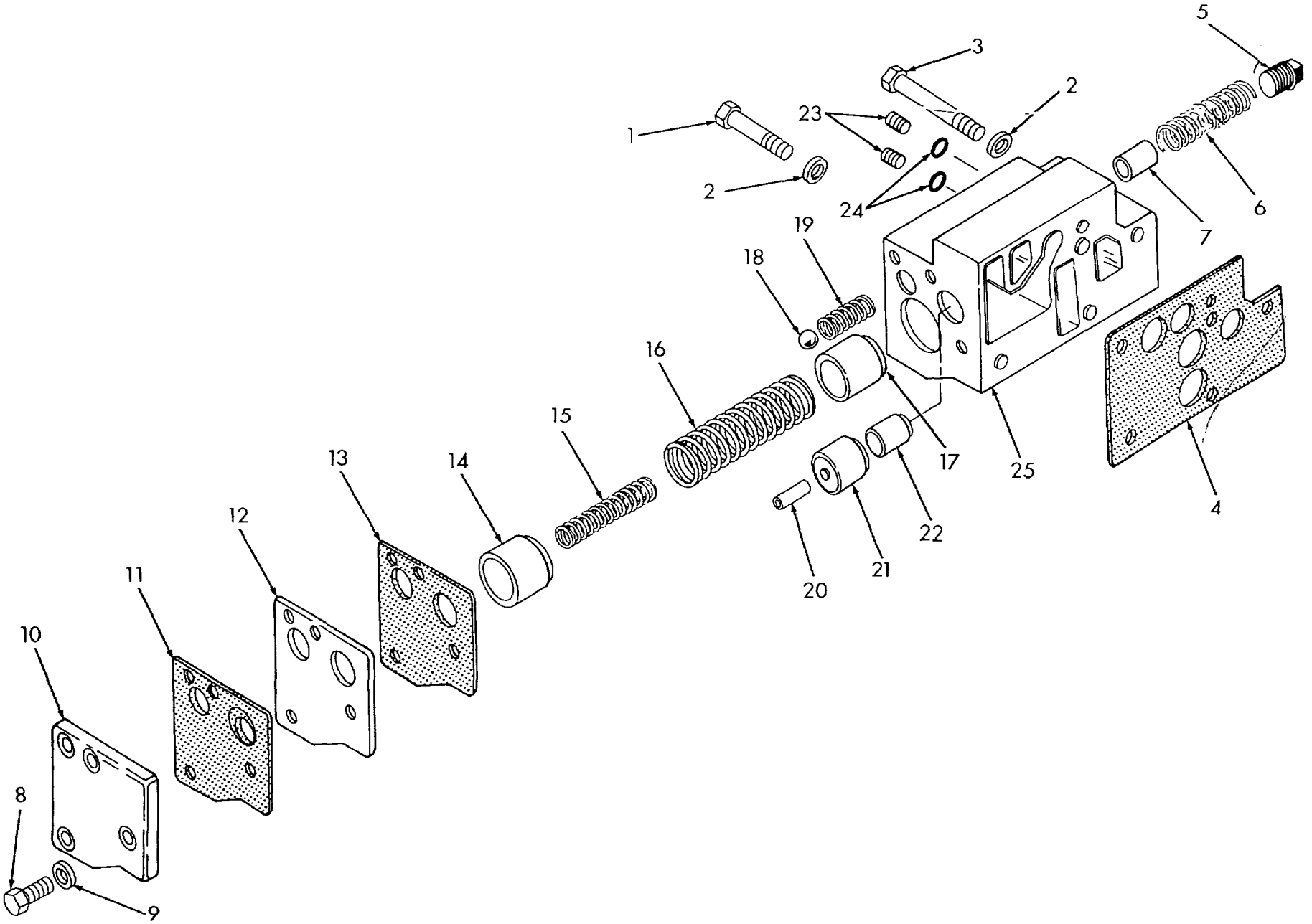

Figure 60. Transmission Control Valve

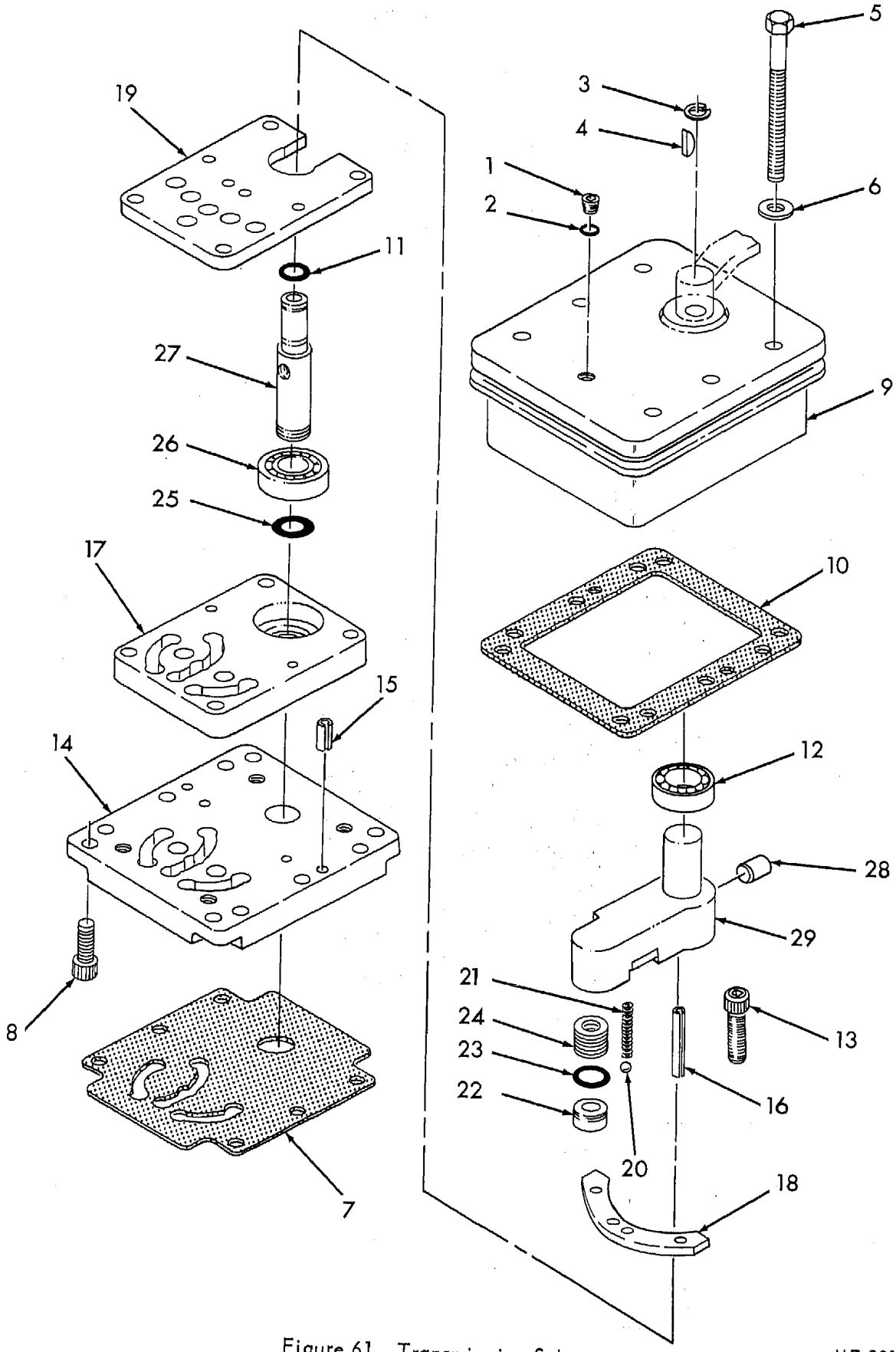

Figure 61. Transmission Selector Valve

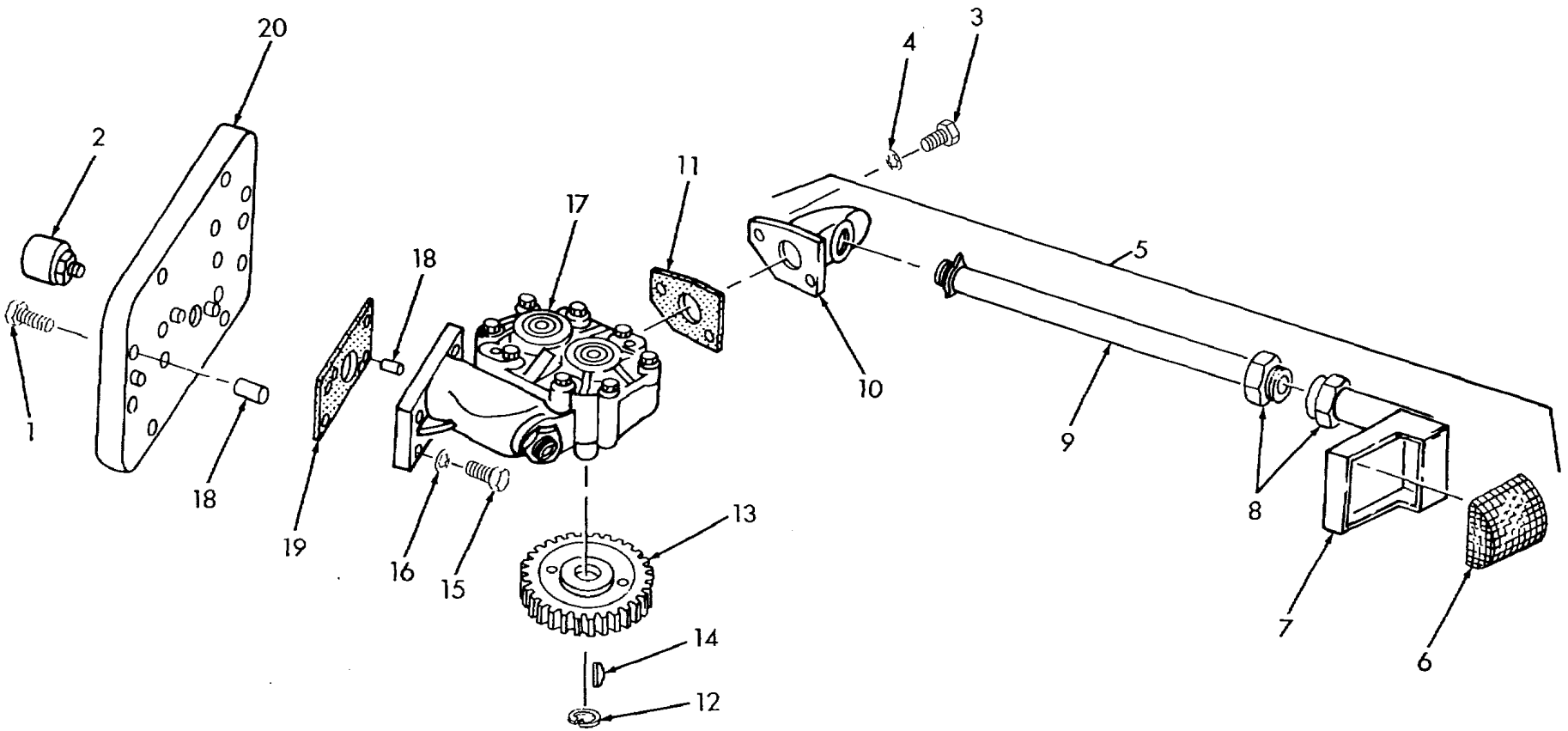

Figure 62. Transmission Oil Pump

ME 3810-290-34P/62

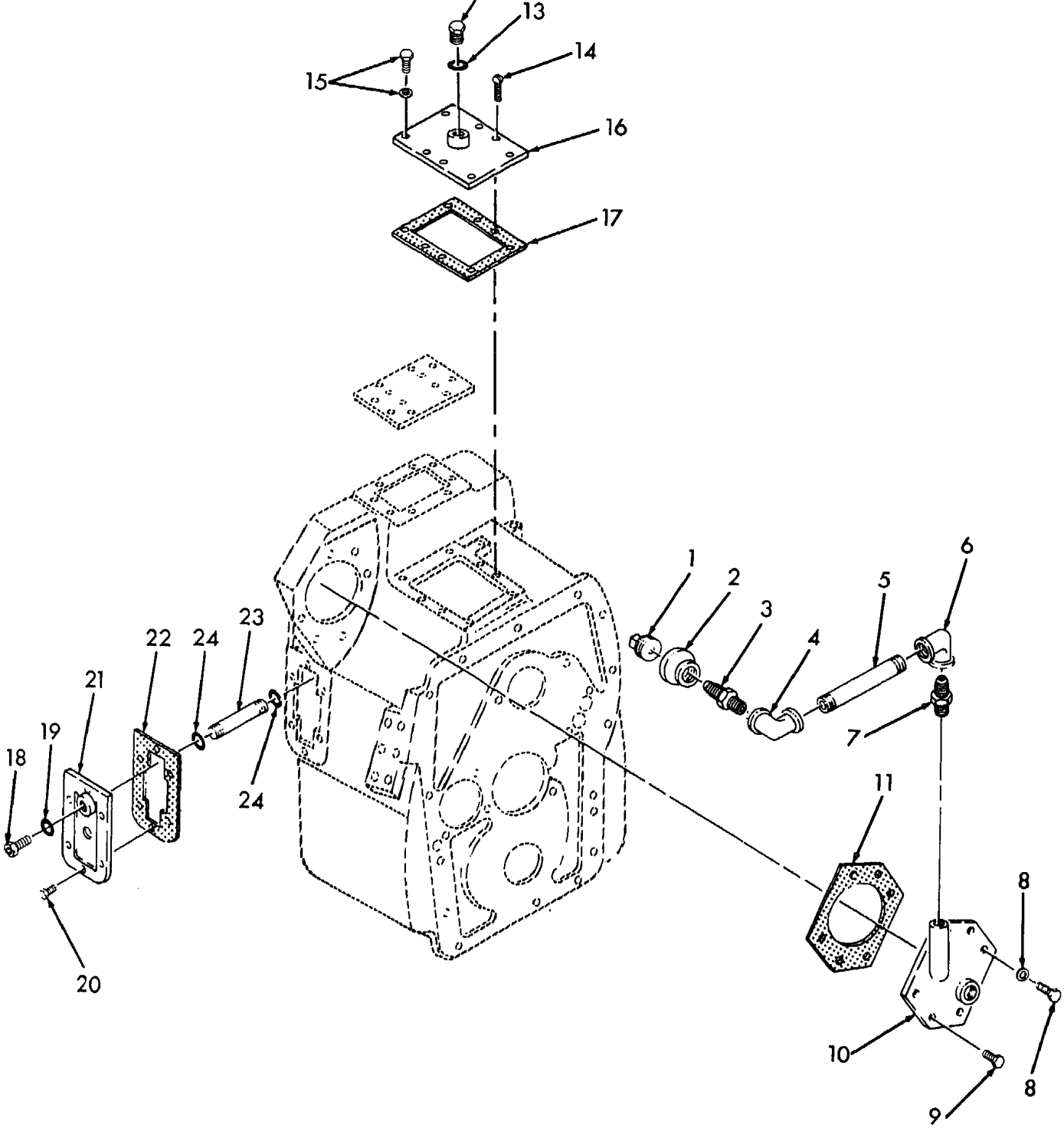

Figure 63. Main Housing, L/H

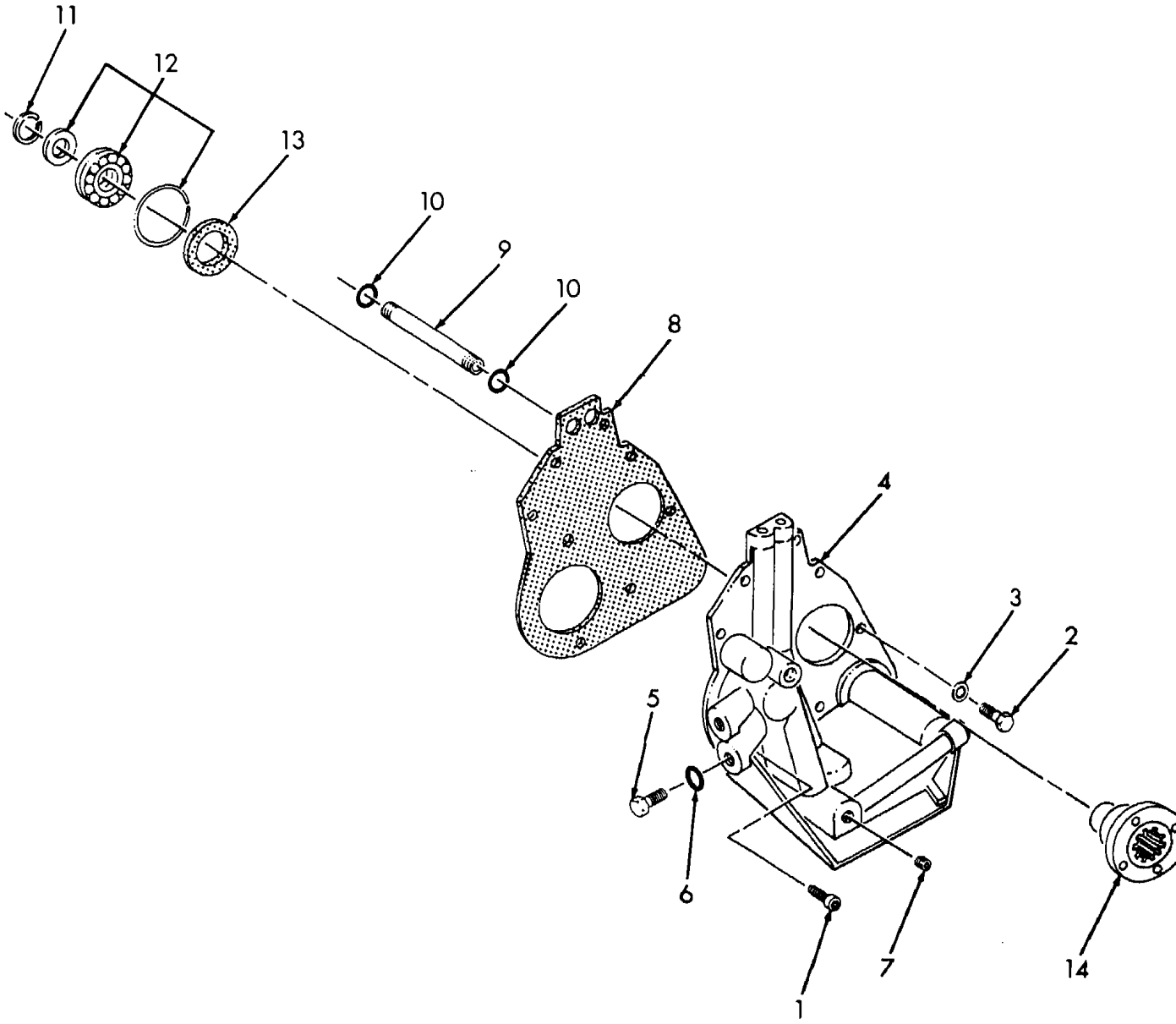

Figure 64. Collector Housing

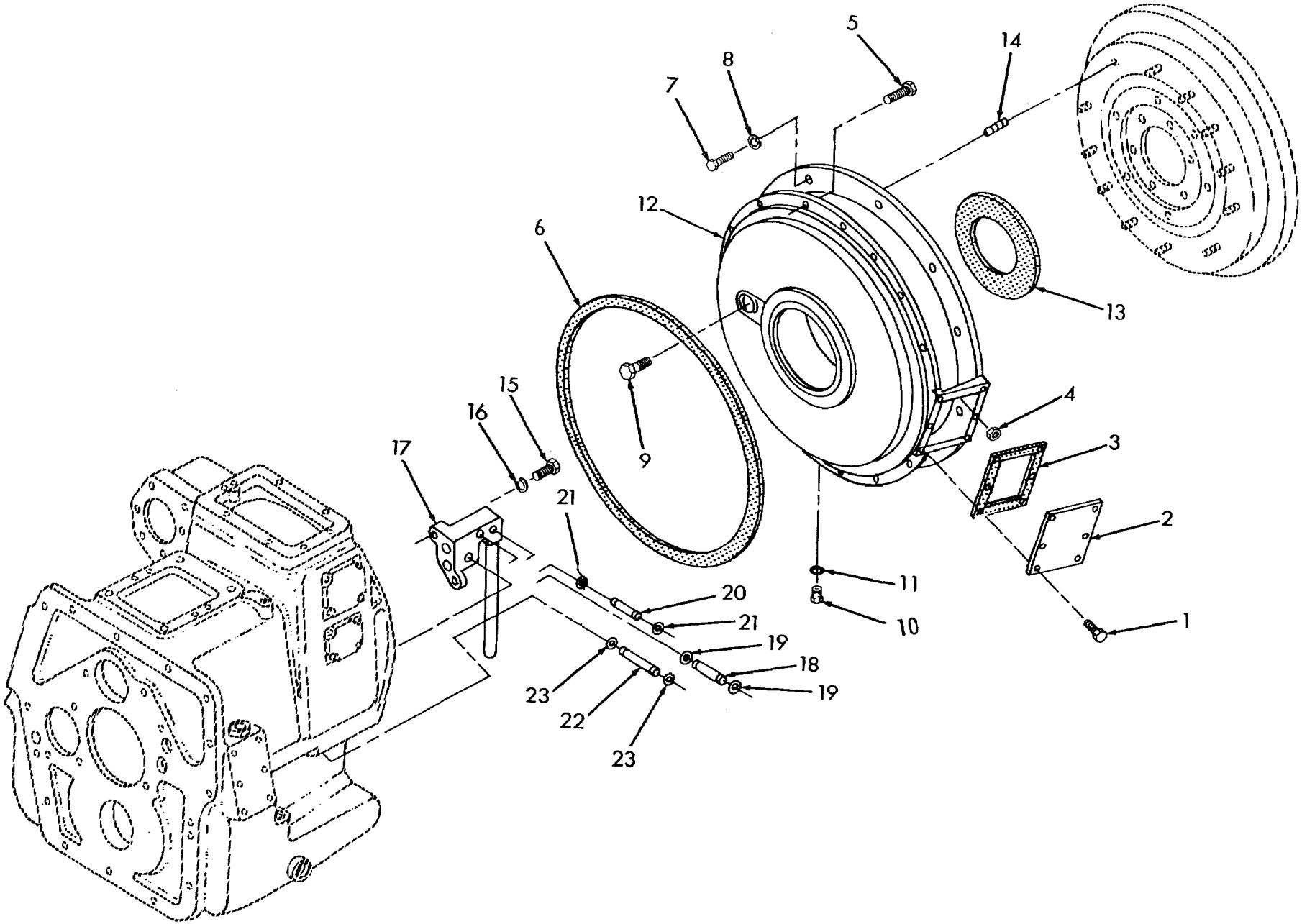

Figure 65. Adapter Housing

ME 3810-290-34P/65

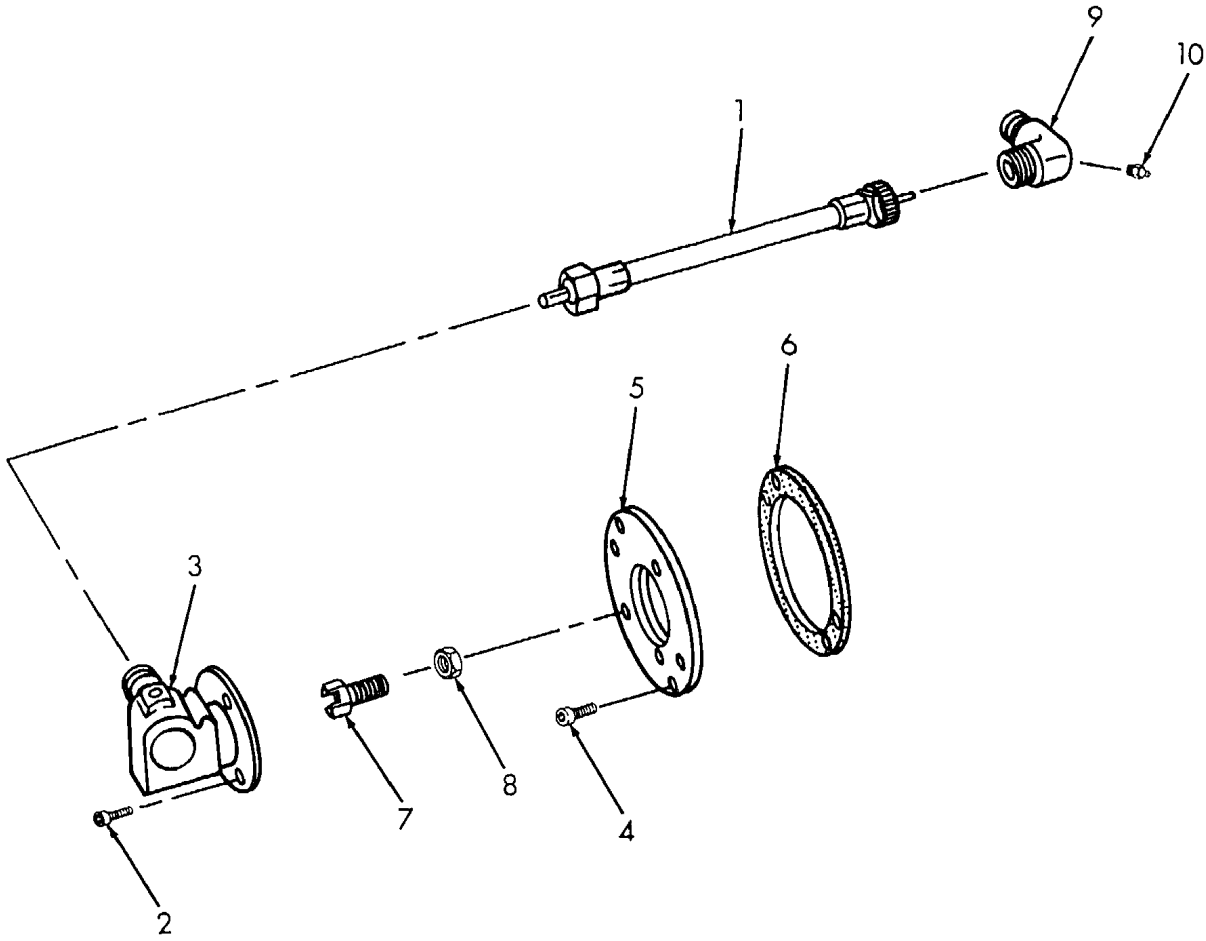

Figure 66. Tachometer Drive

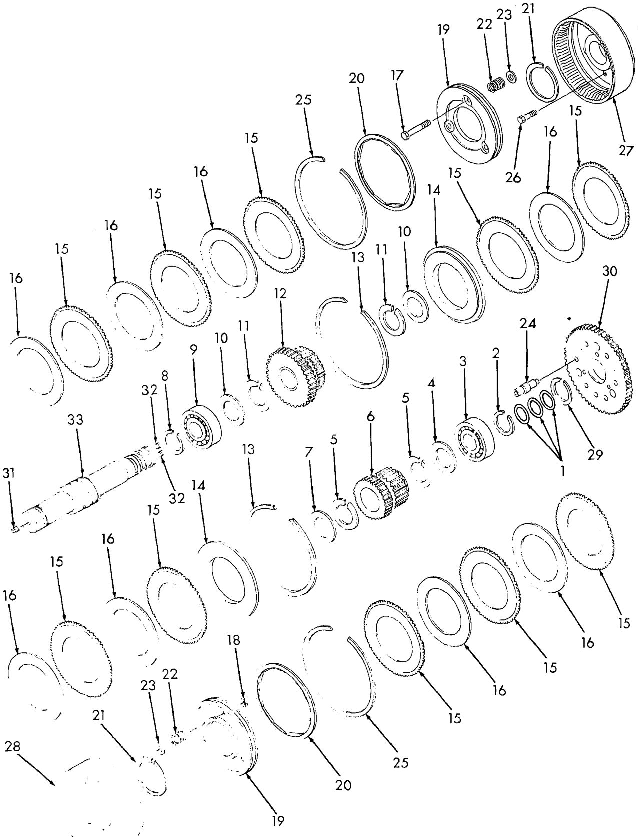

Figure 67. Transmission Clutch

ME 3810-290-34P/67

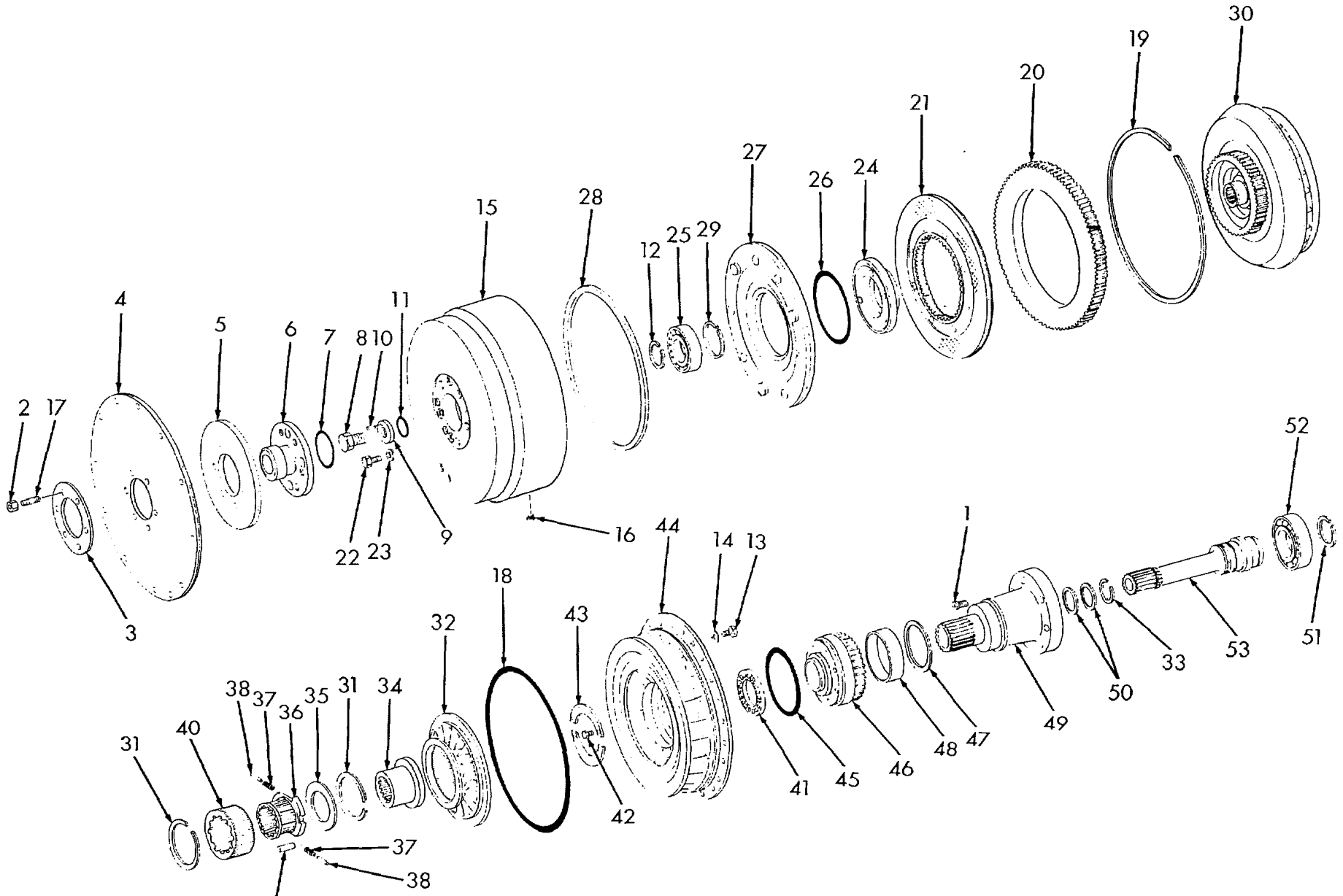

30
19
20
21
27
26
24
28
15
12
25
29
4
5
6
7
8
10
11
2
17
22
23
9
16
3
52
1
44
14
13
18
32
43
33
53
51
50
49
47
48
46
45
41
42
38
37
36
35
31
34
40
31
37
38

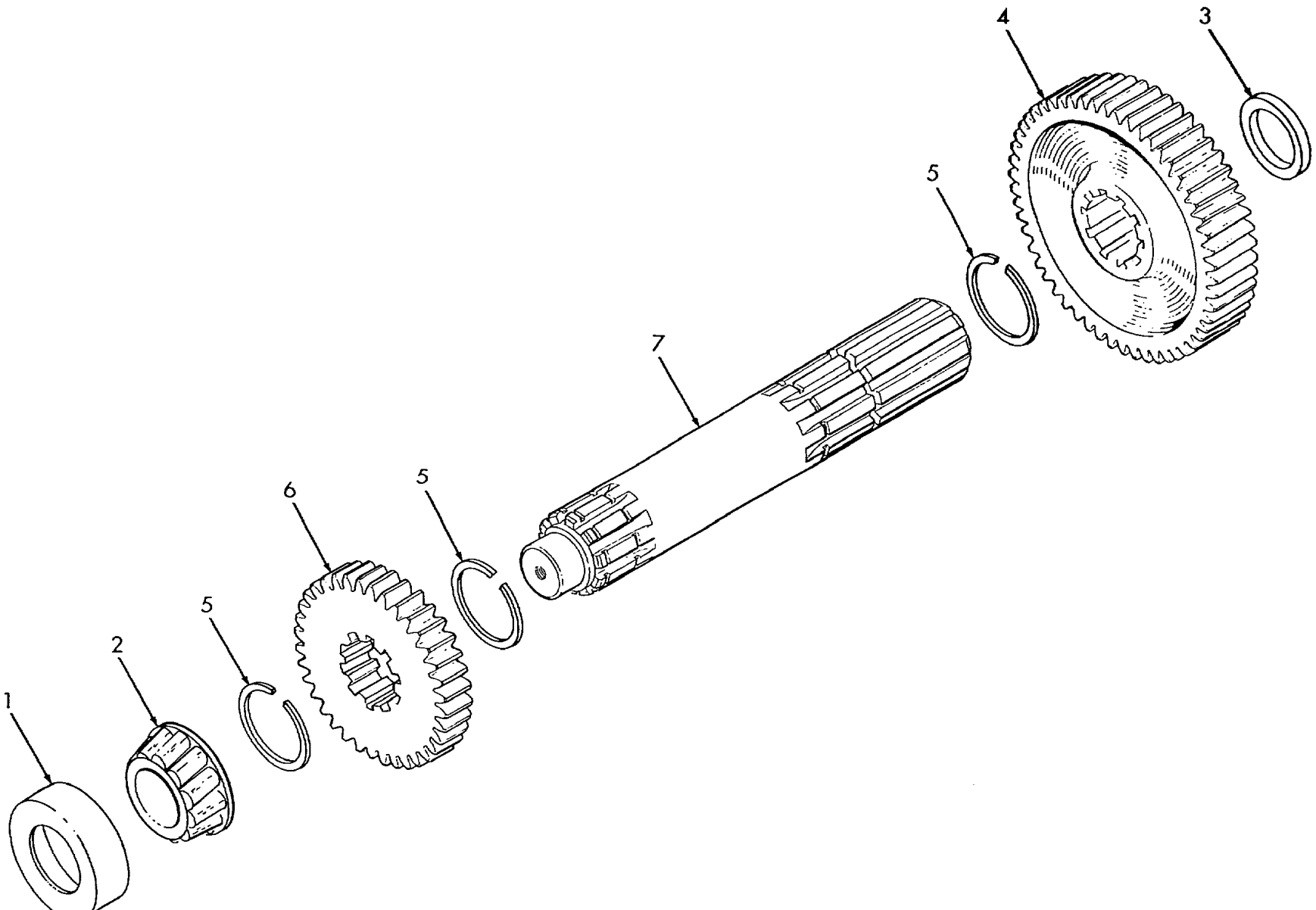

ME 3810-290-34P/69

Figure 69. Transmission Shaft

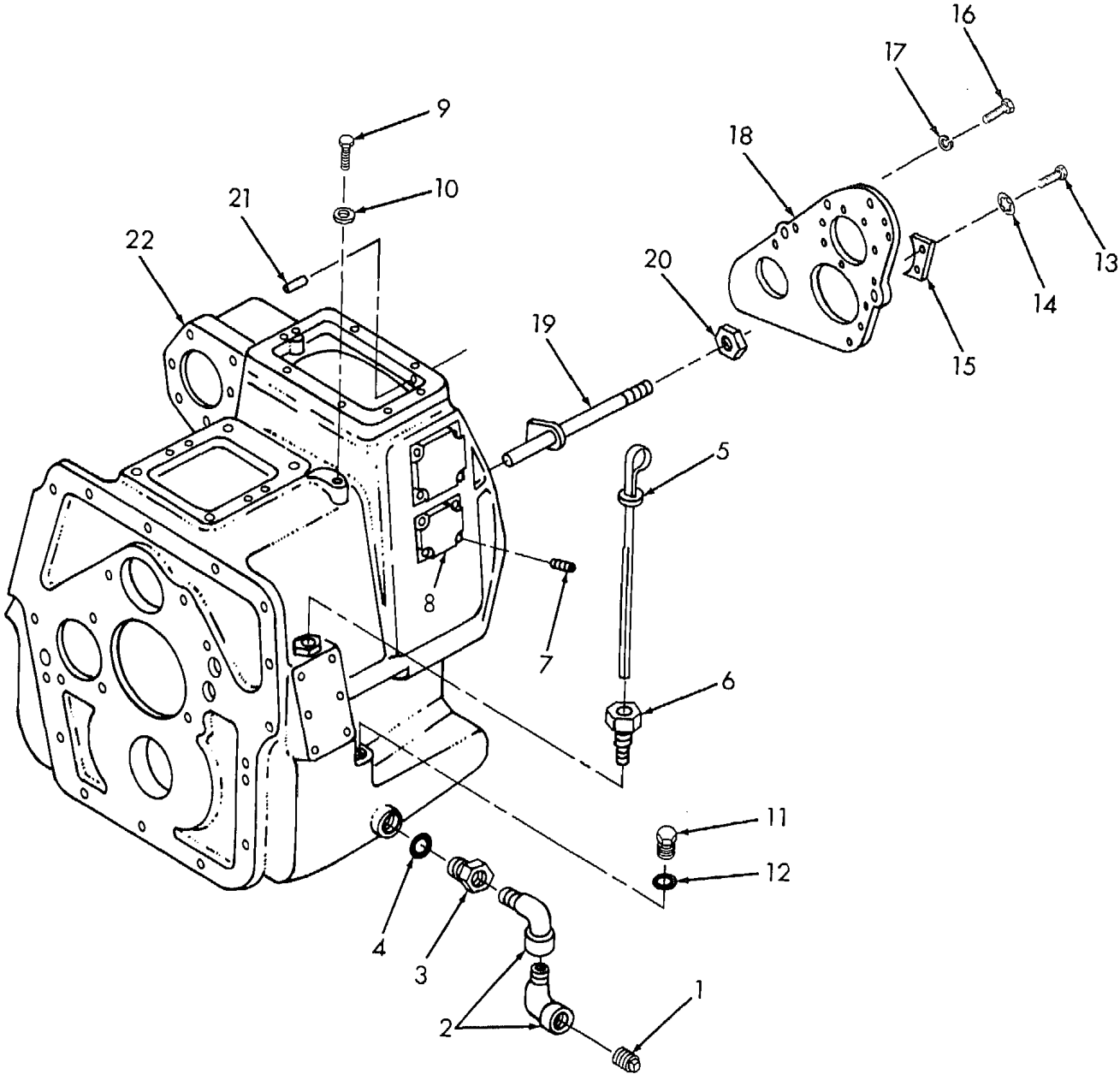

Figure 70. Main Housing, R/H

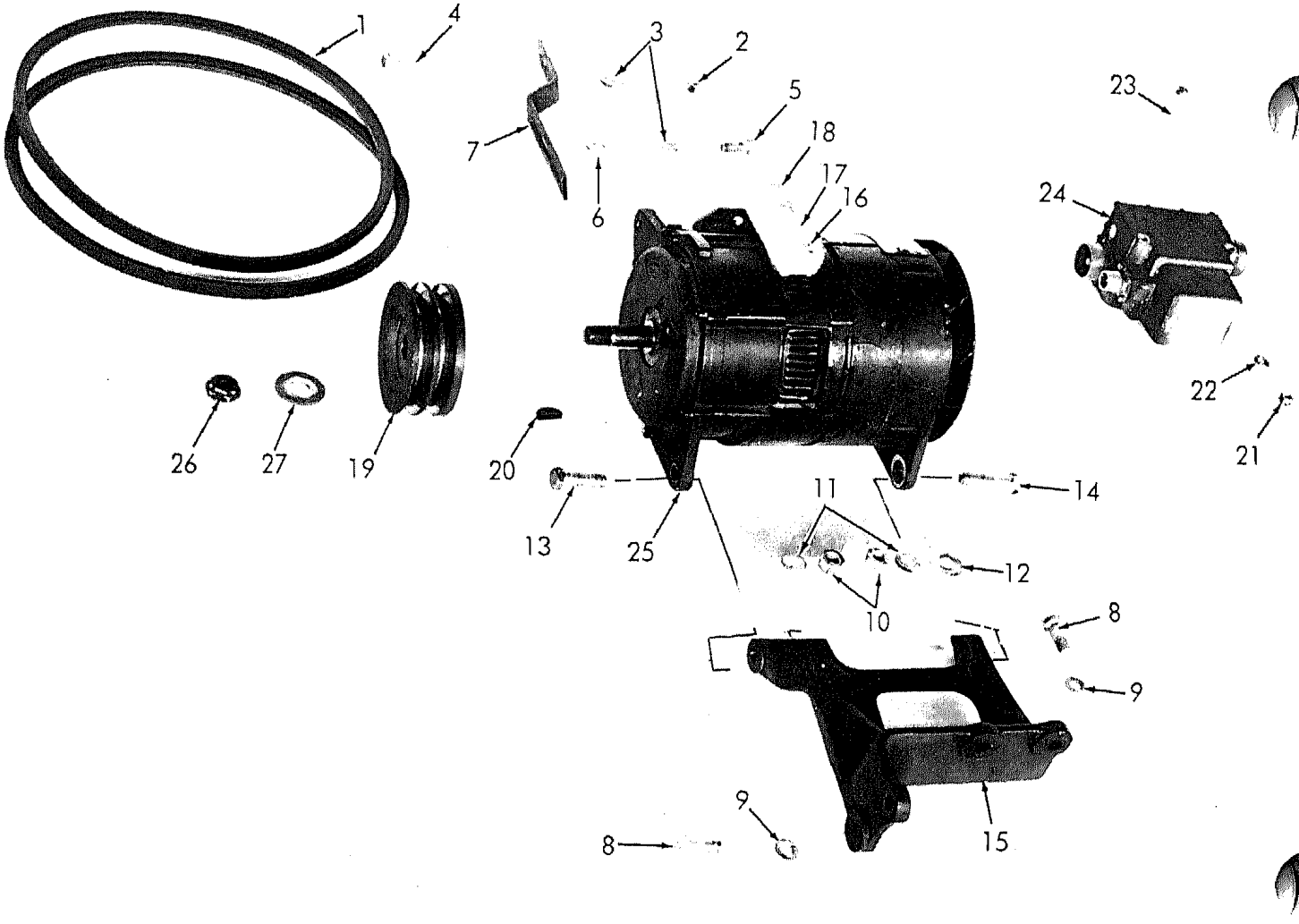

Figure 71. Alternator and Drive

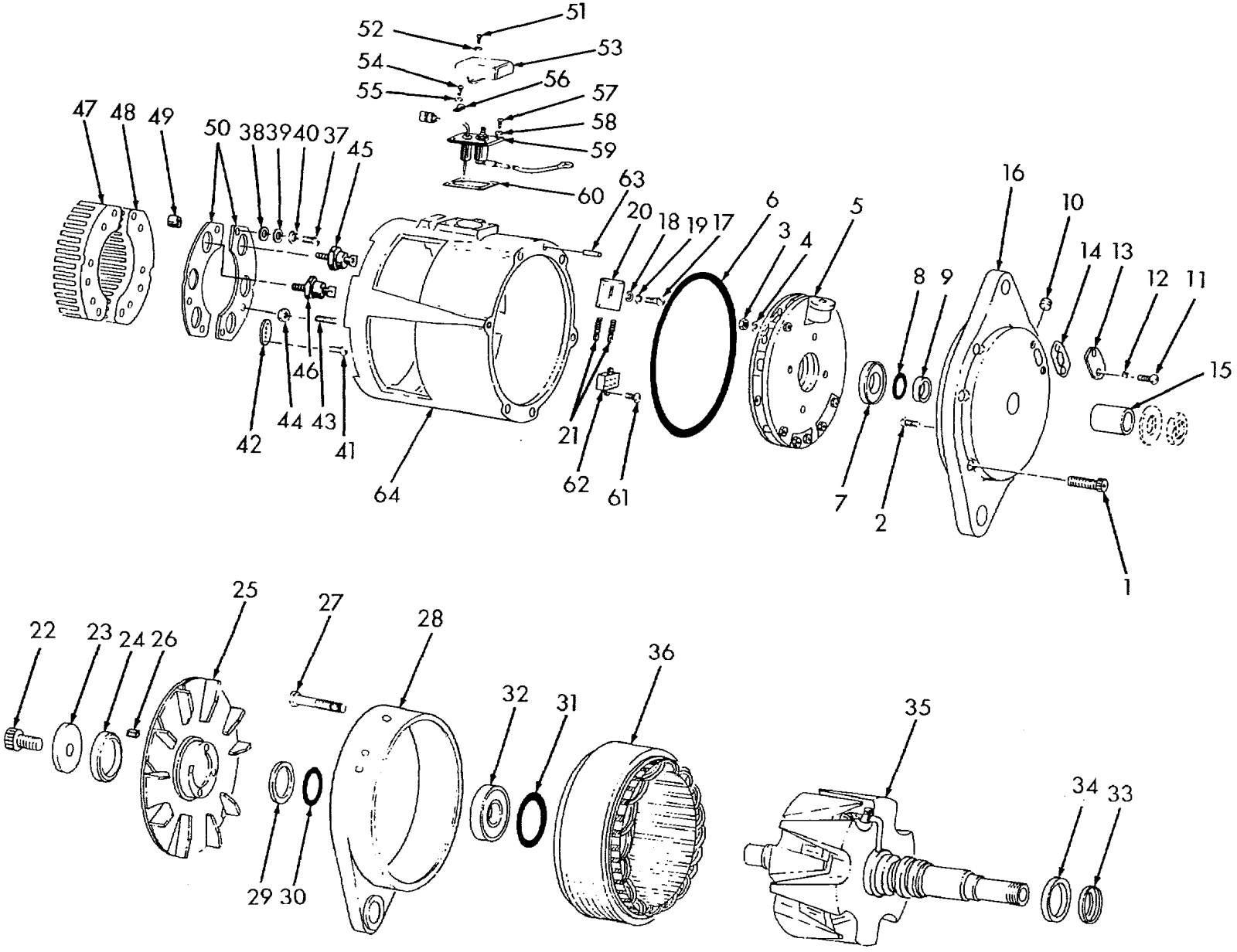
51
52
53
54
56
55
57
58
59
60
47
48
49
50
38
39
40
37
45
63
20
18
19
17
6
3
4
5
16
10
14
13
12
11
8
9
15
46
42
44
43
41
64
21
62
61
7
2
1
25
27
28
22
23
24
26
36
32
31
35
34
33
29
30

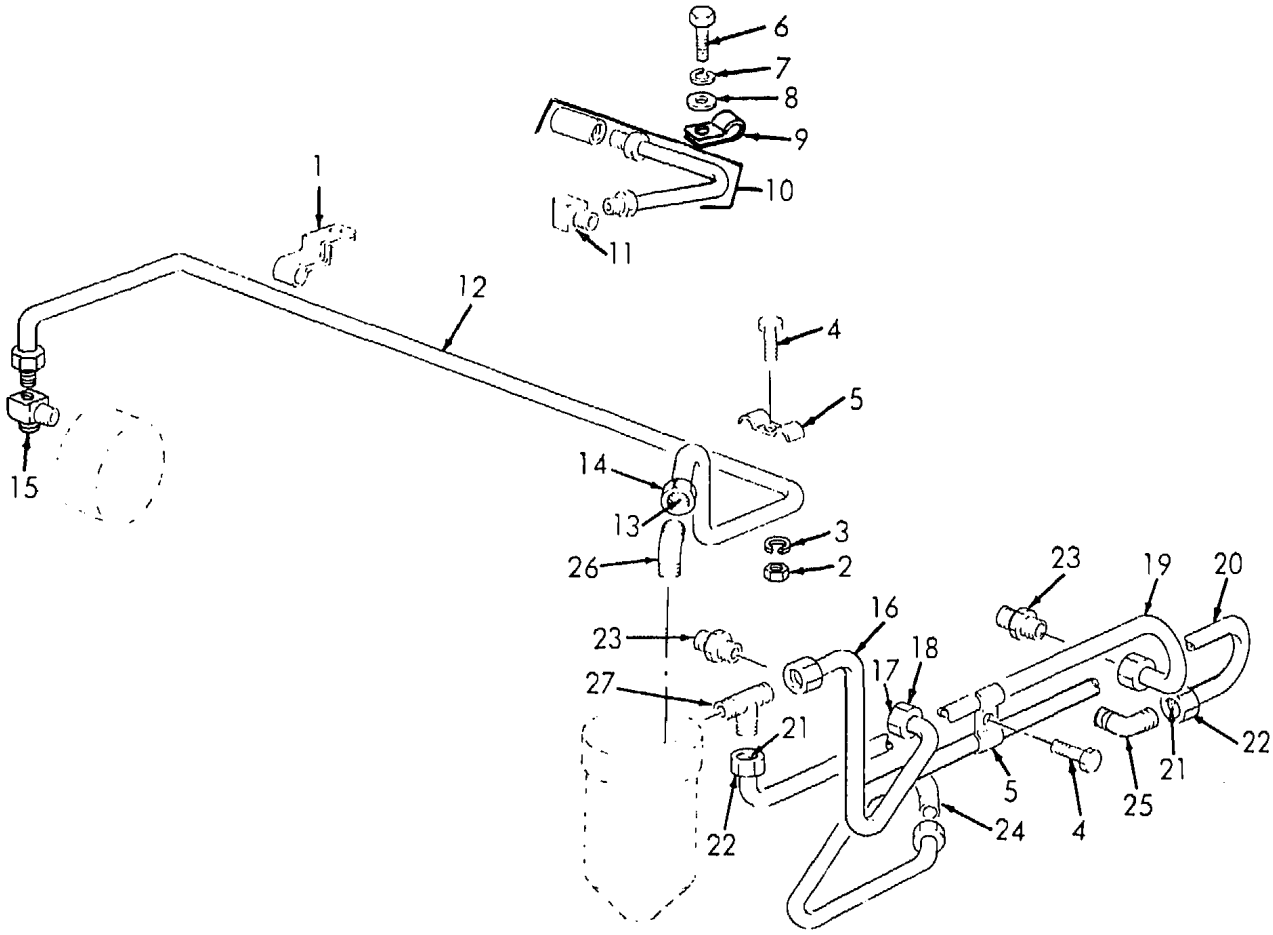

Figure 73. Fuel Lines

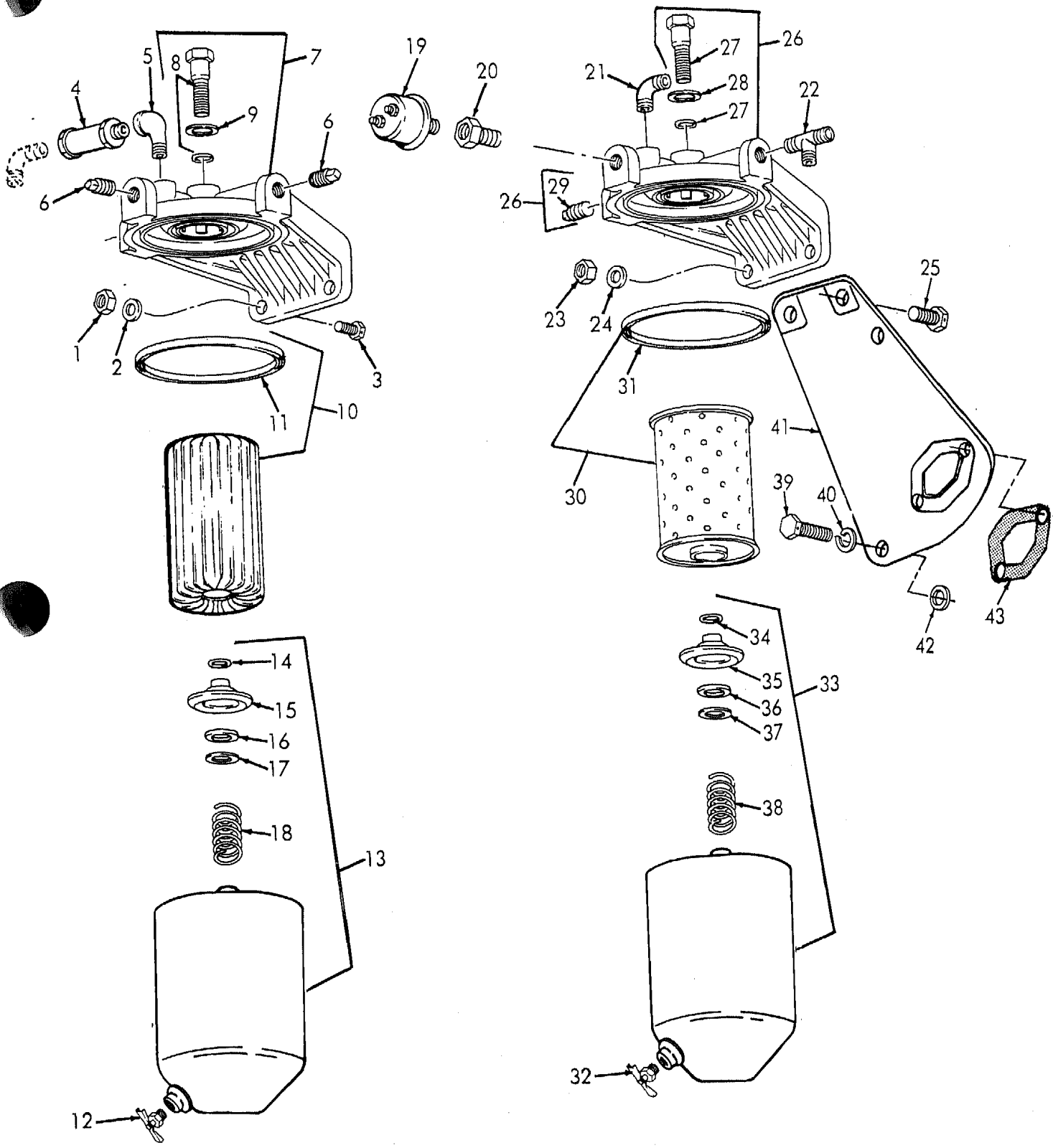

Figure 74. Fuel Strainer and Filter

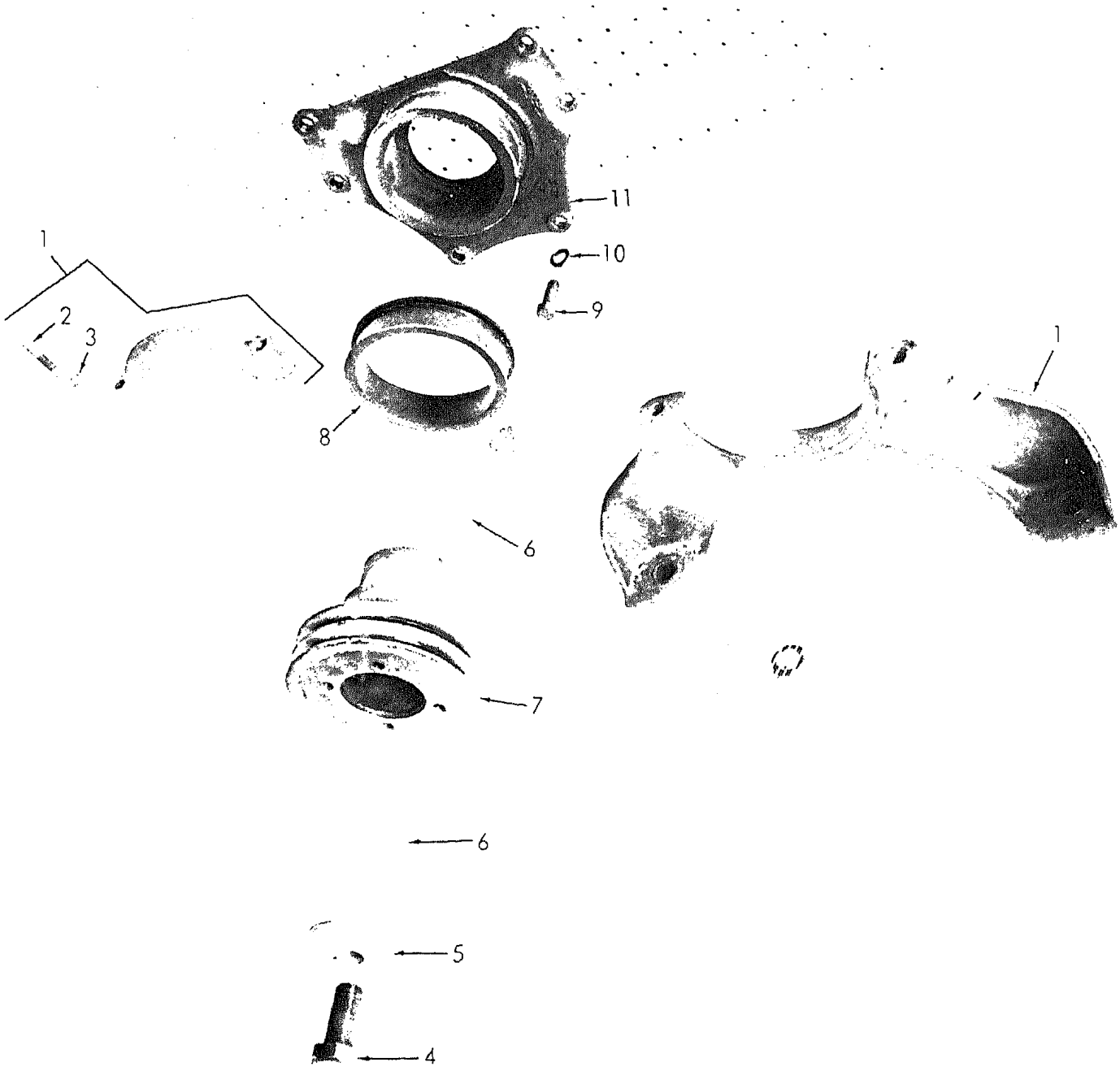

Figure 75. Engine Front Mounting

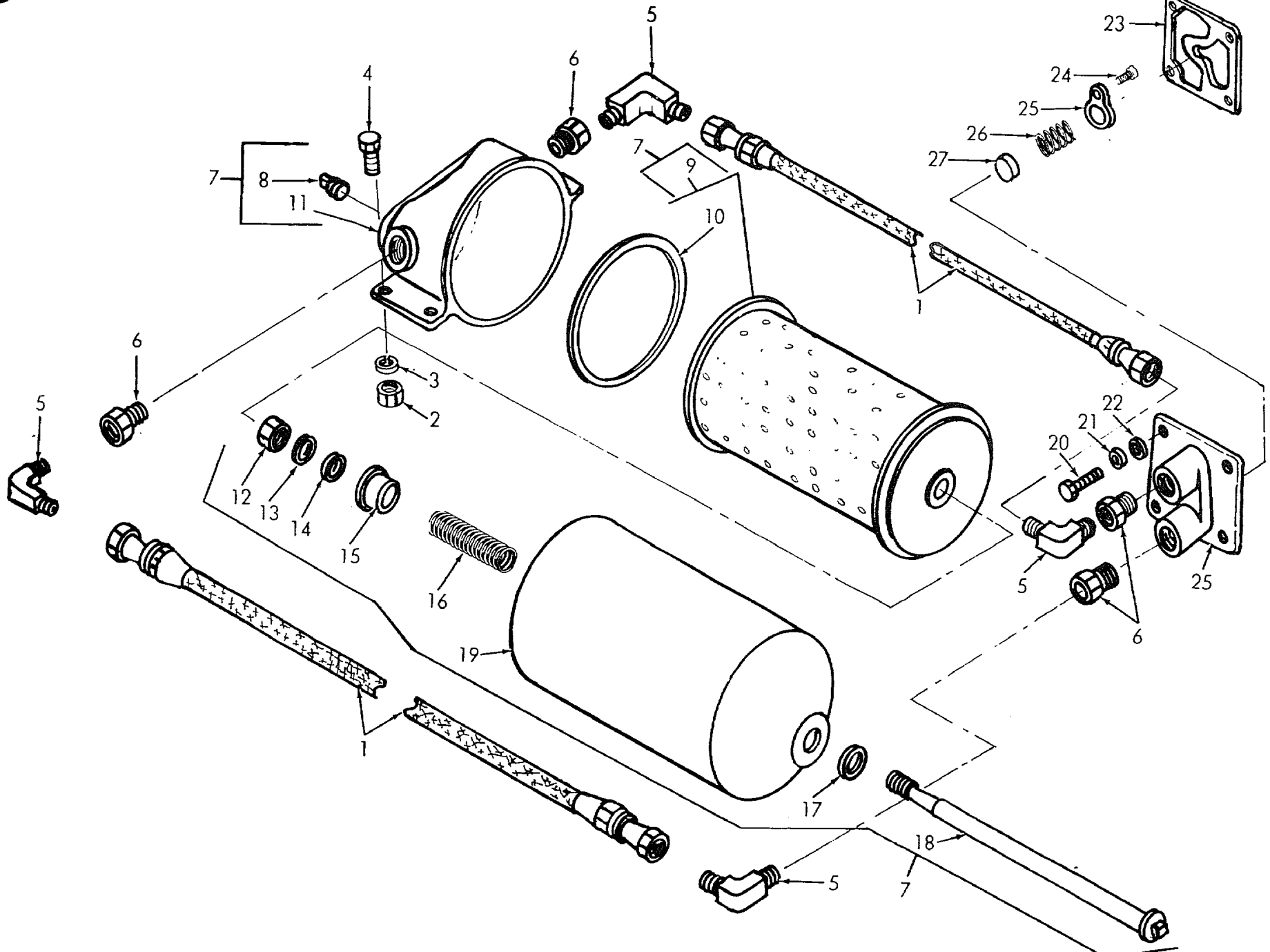
1
2
3
4
5
6
7
8
9
10
11
12
13
14
15
16
17
18
19
20
21
22
23
24
25
26
27

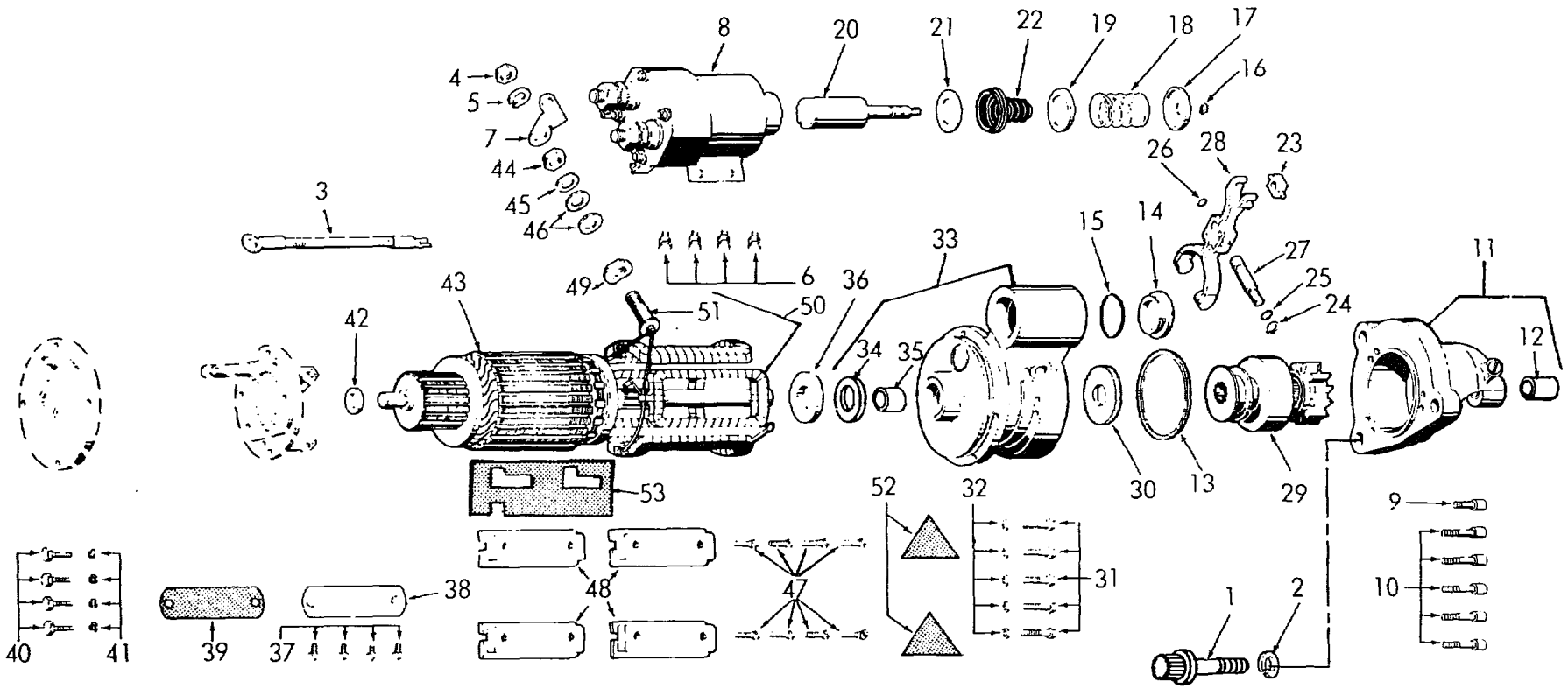

Figure 77. Starter

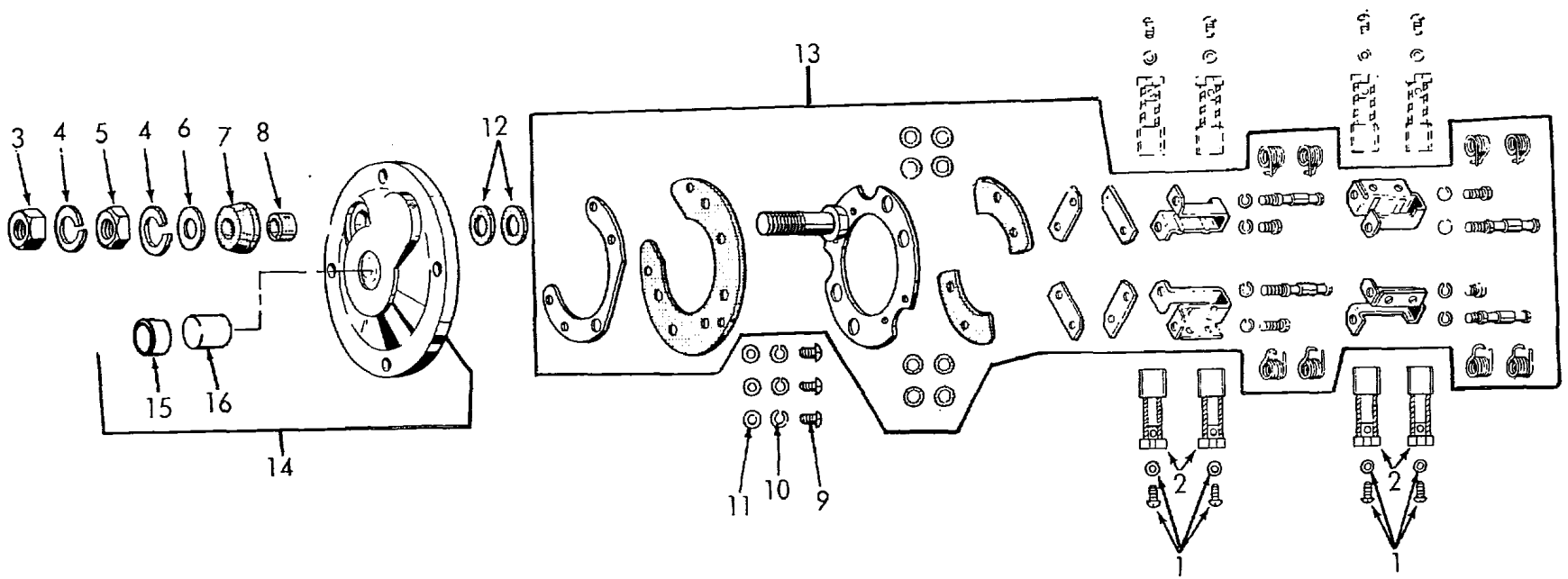

Figure 78. Starter End and Brush Rig

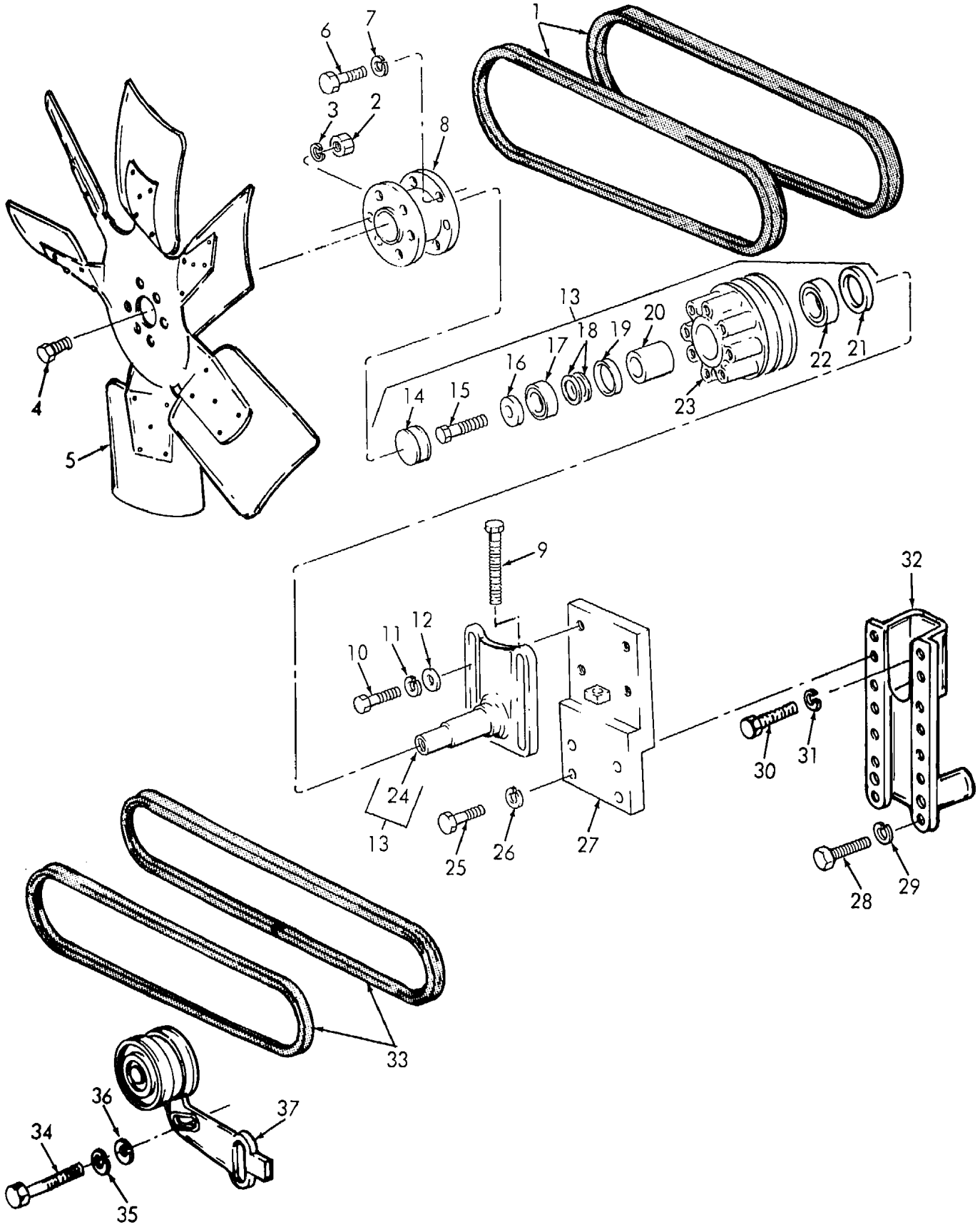

ME 3810-290-34P/79

Figure 79. Fan Bracket and Idler

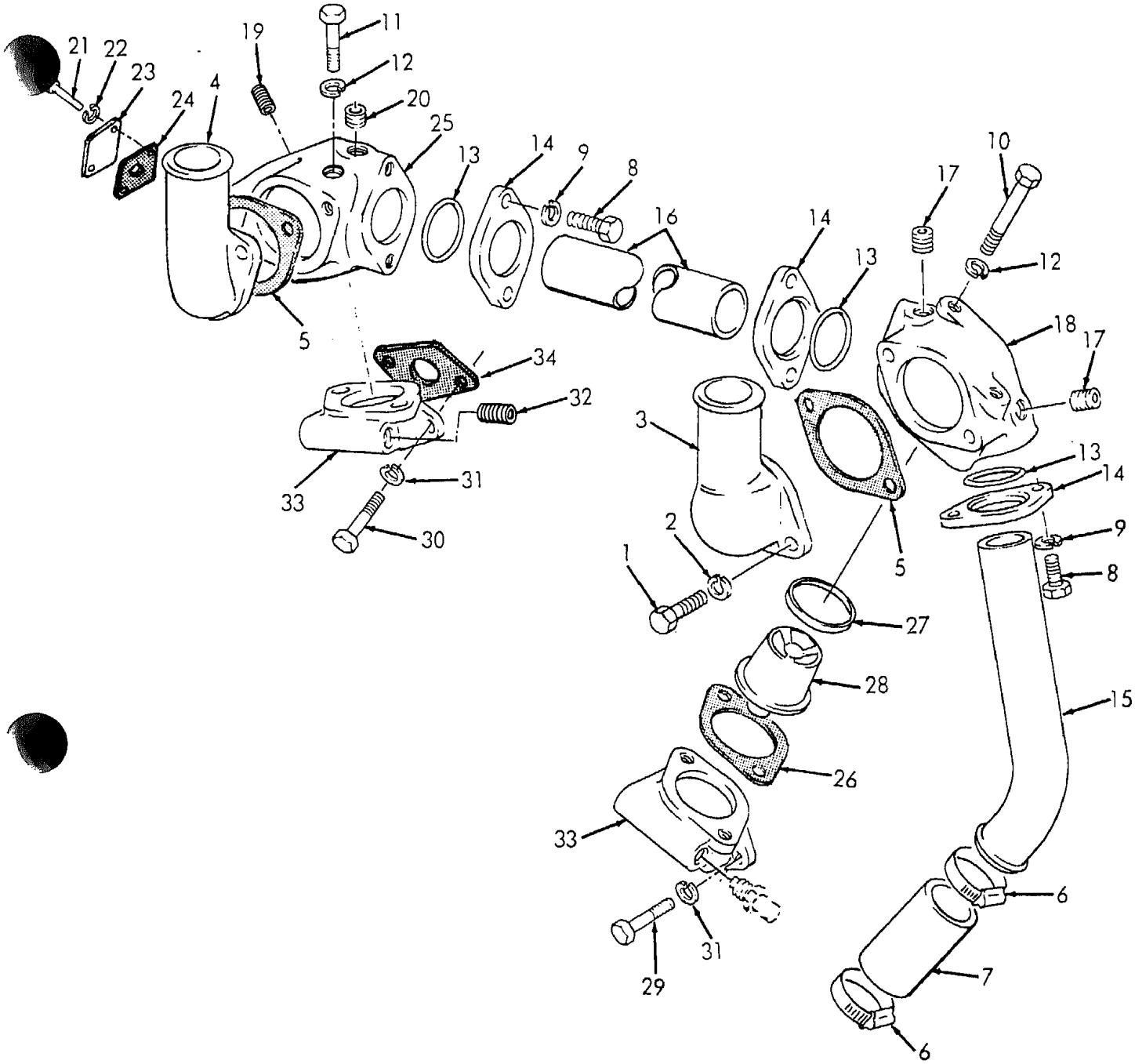

Figure 80. Water Connections

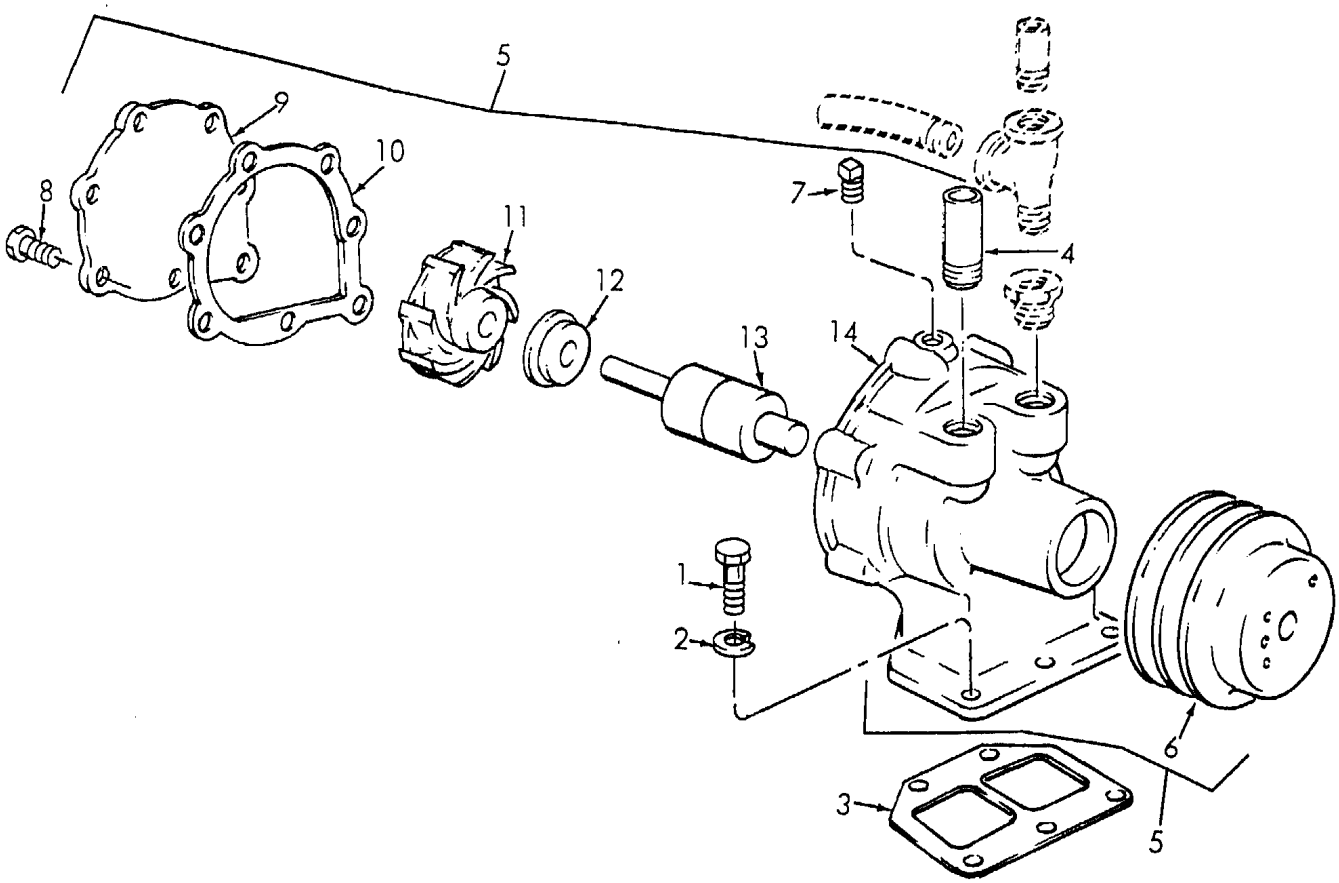

Figure 81. Water Pump

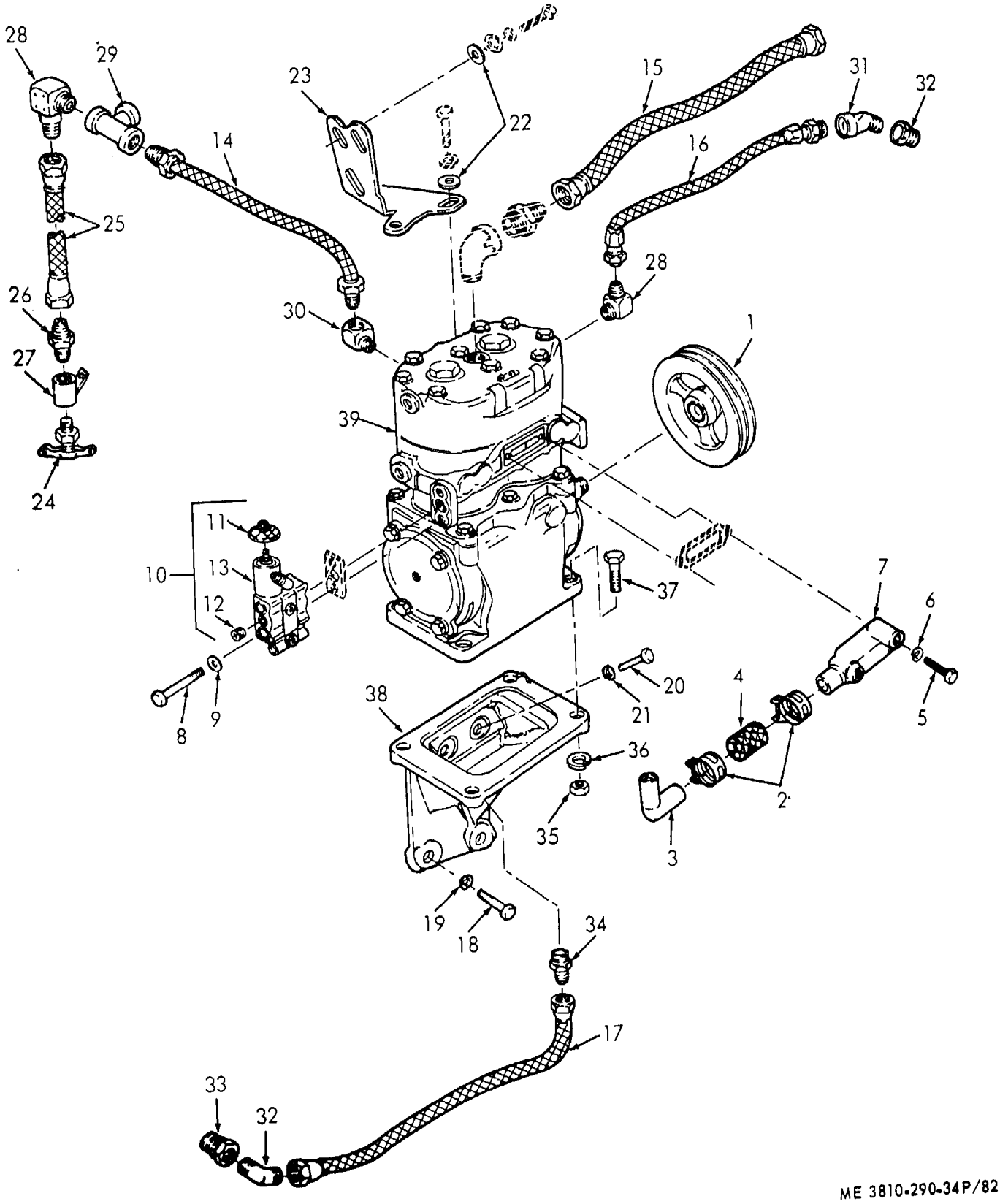

Figure 82. Air Compressor Installation

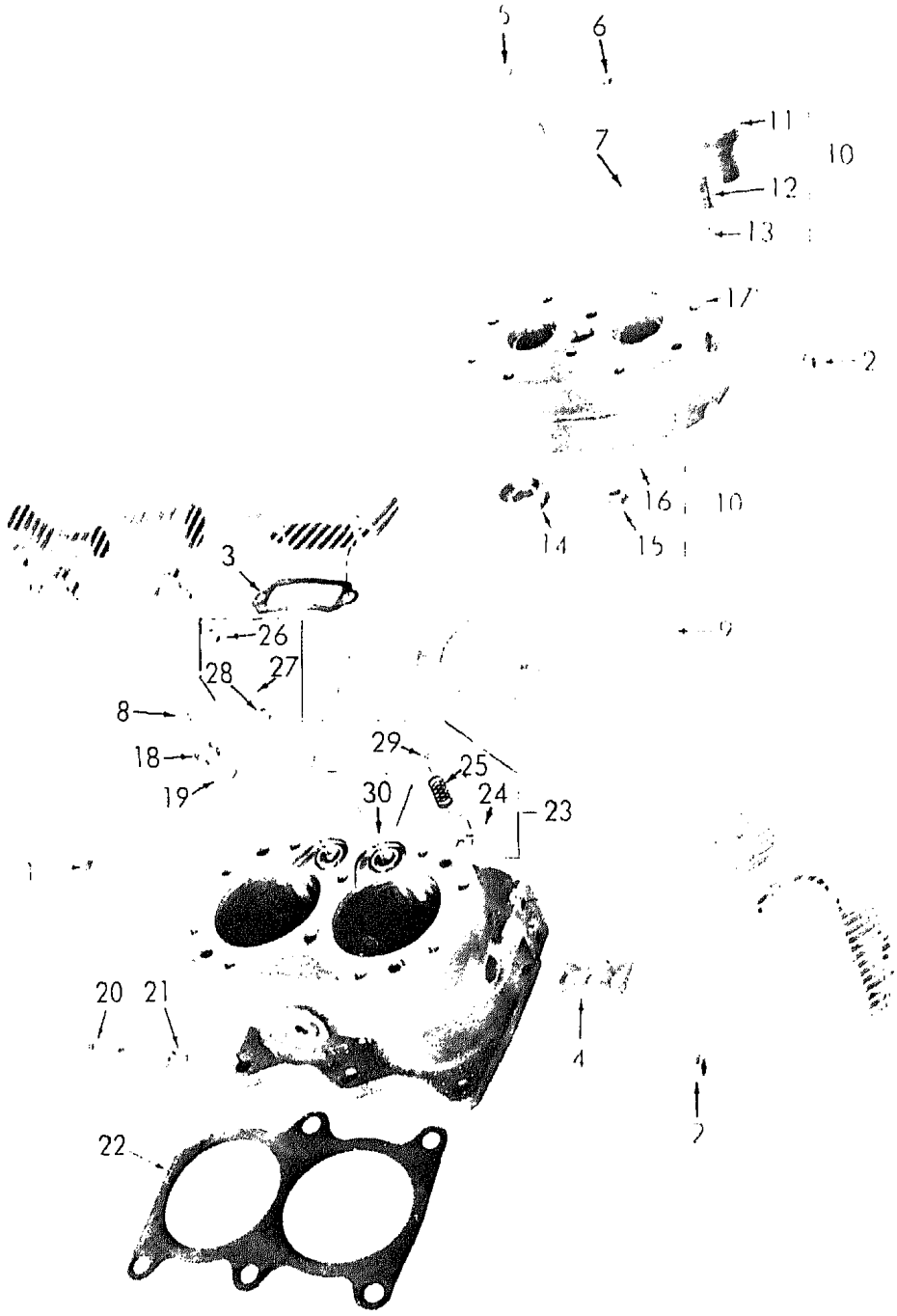

ME 3810-290-34P 83

Figure 83. Air Compressor Head and Block

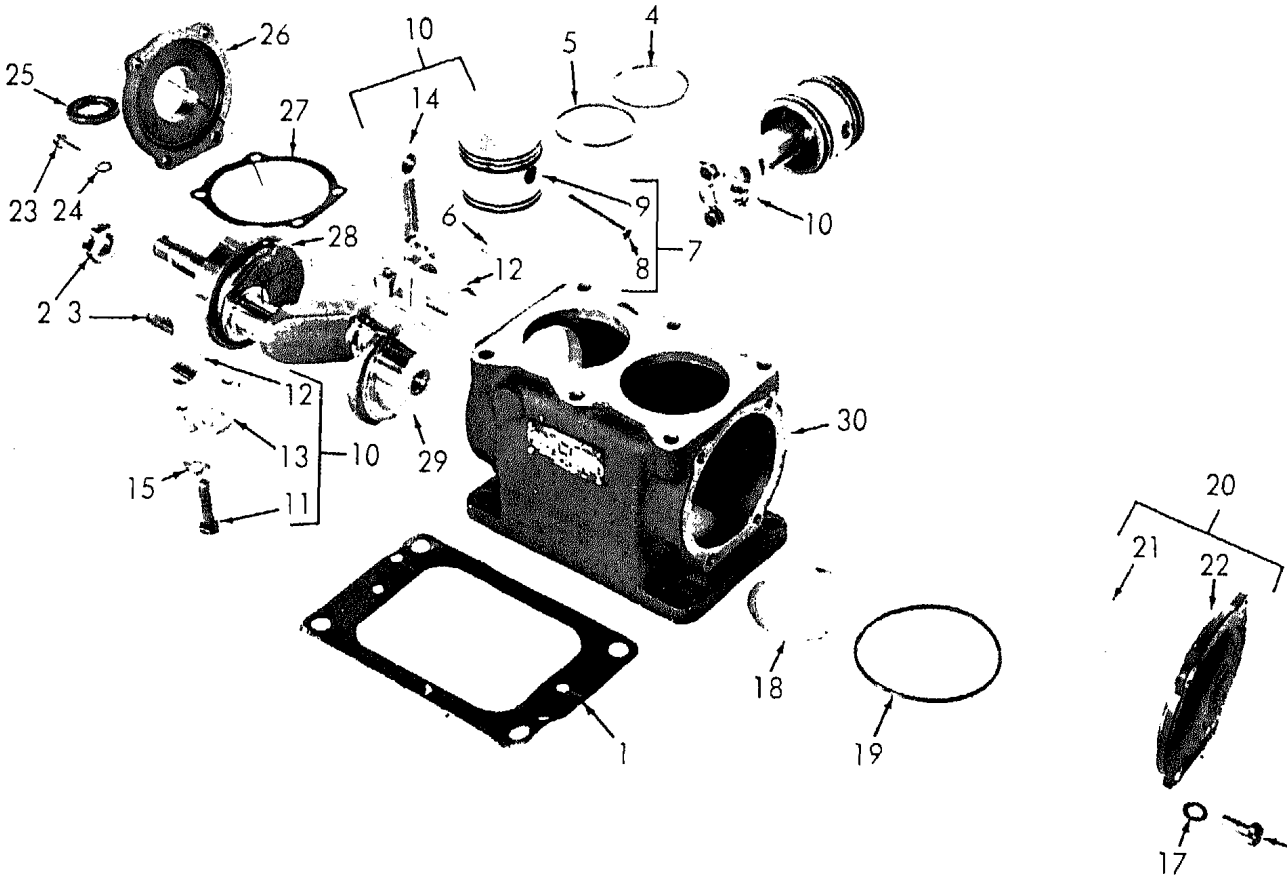

Figure 84. Air Compressor Crankcase

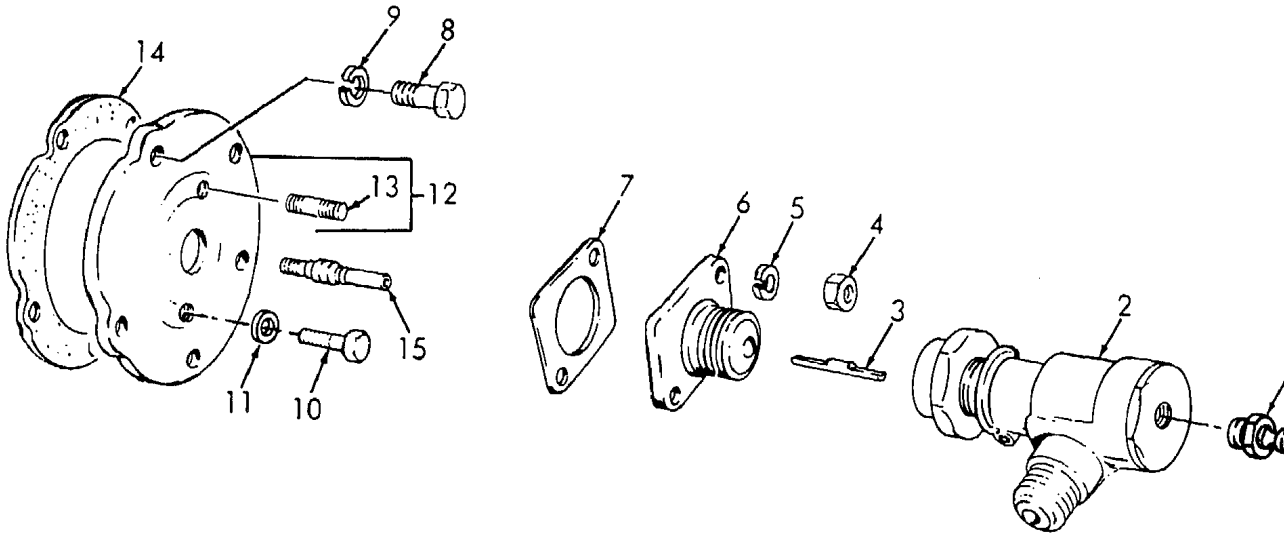

Figure 85. Tachometer Adapter

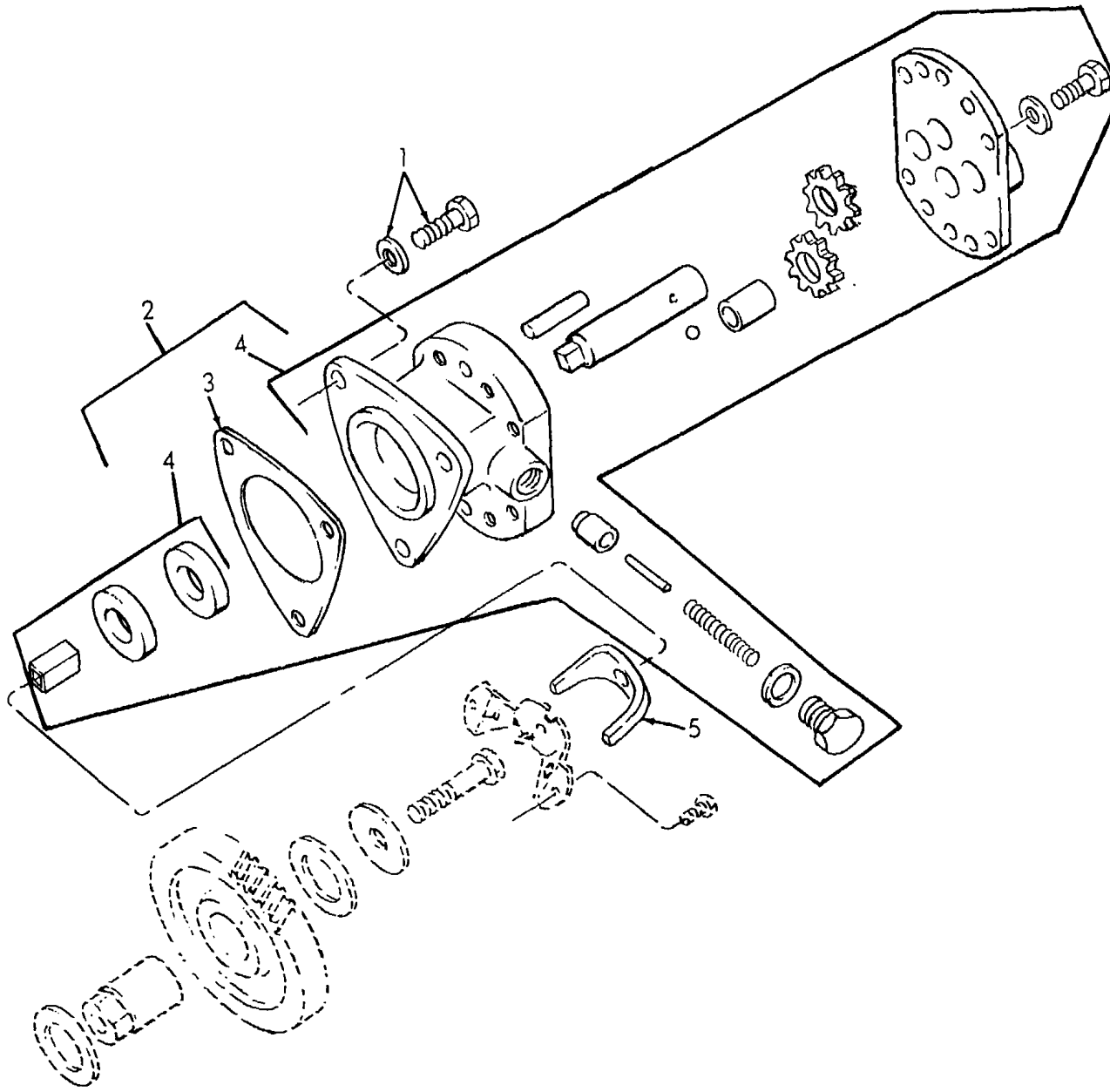

Figure 86. Fuel Transfer Pump

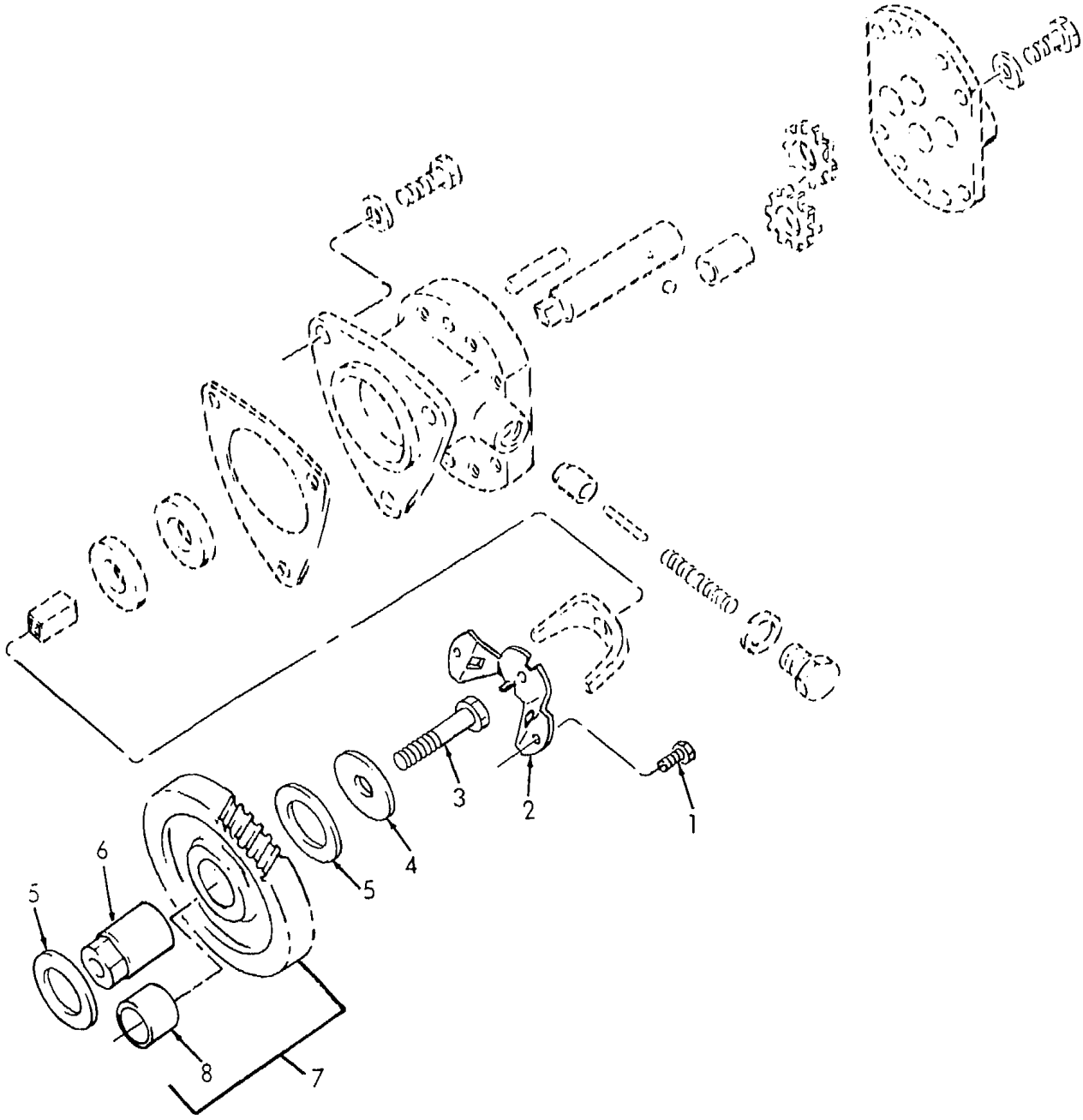

Figure 87. Fuel Pump Drive

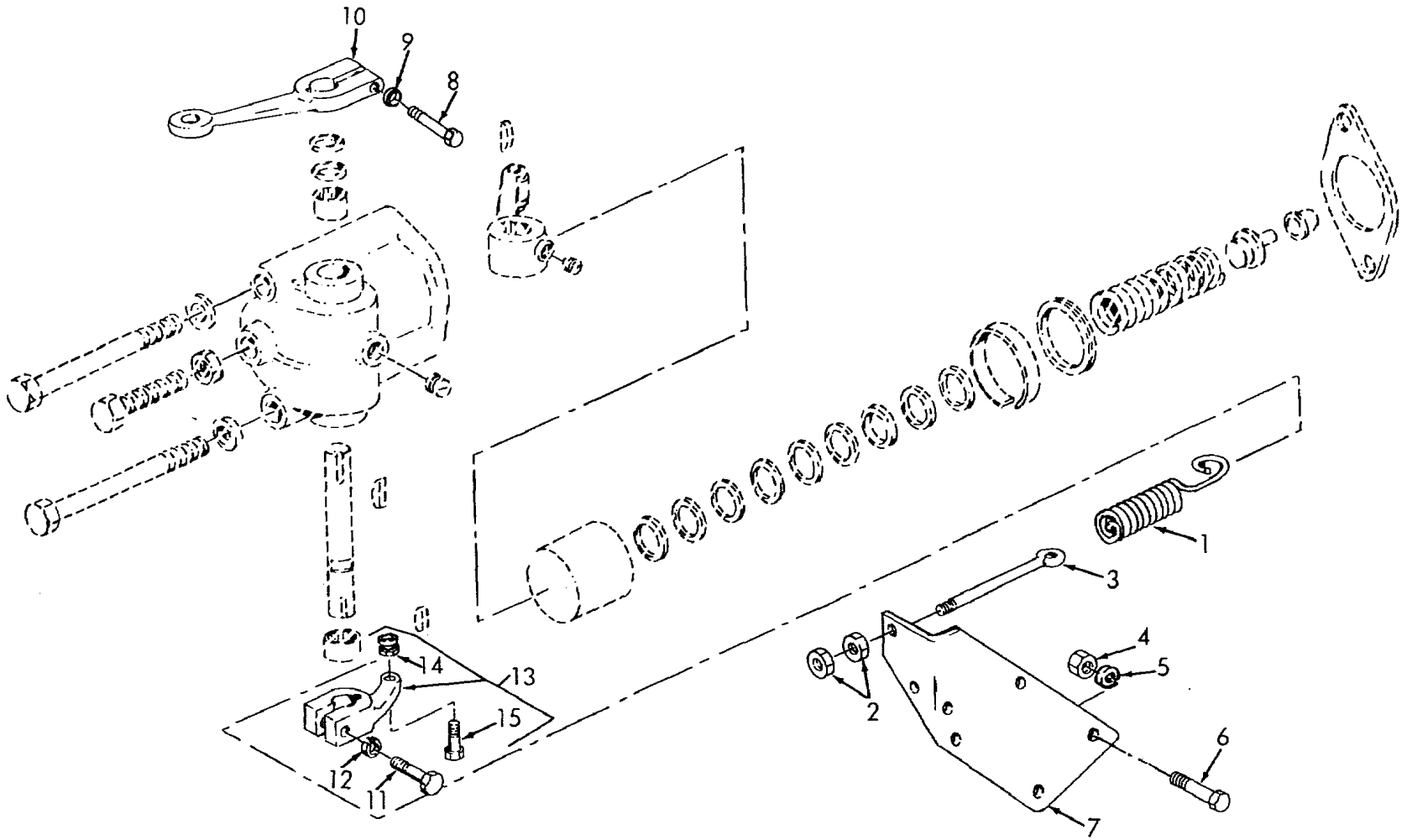

Figure 88. Governor Linkage

ME 3810-290-34P/88

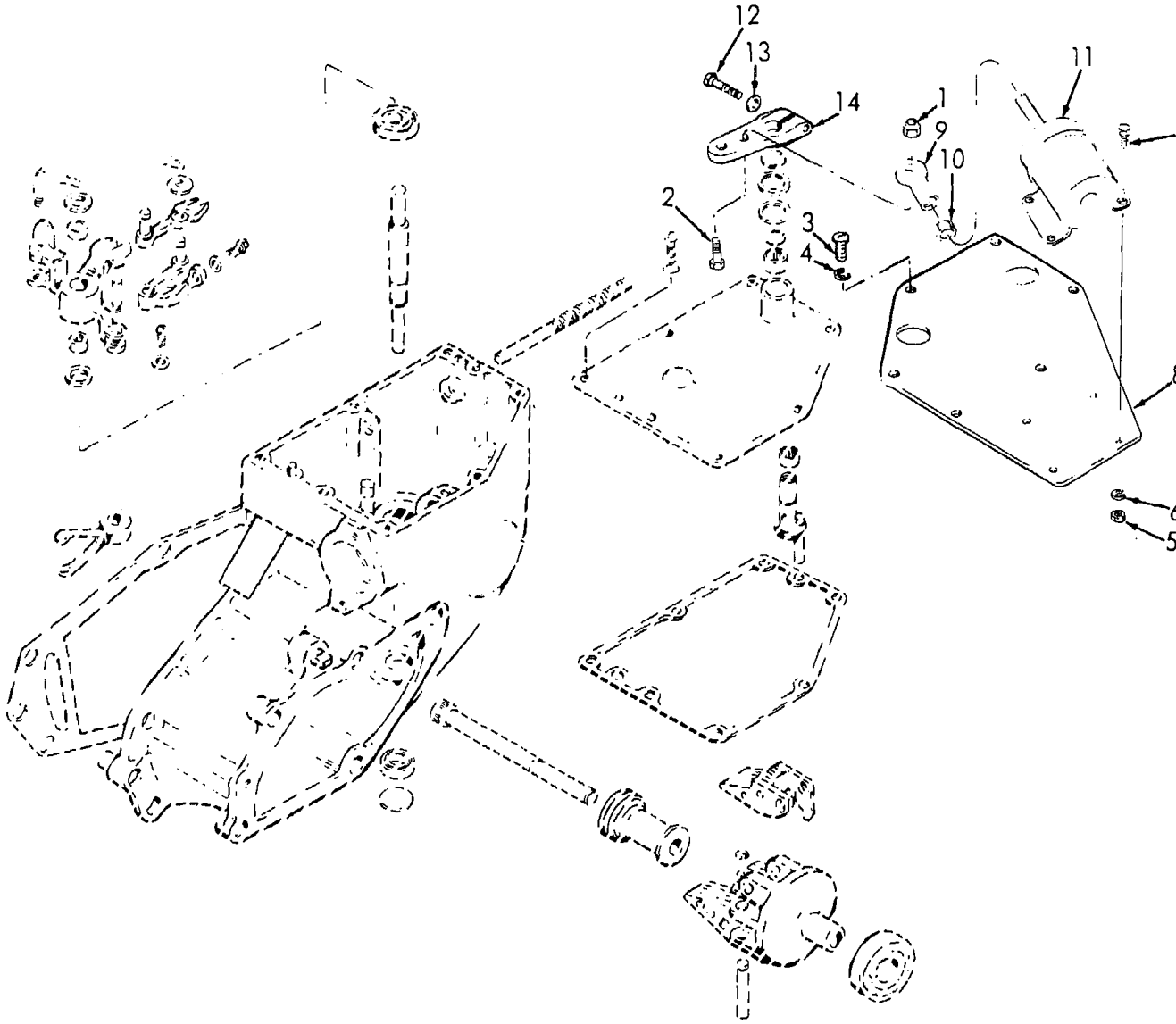

Figure 89. Governor Solenoid and Linkage

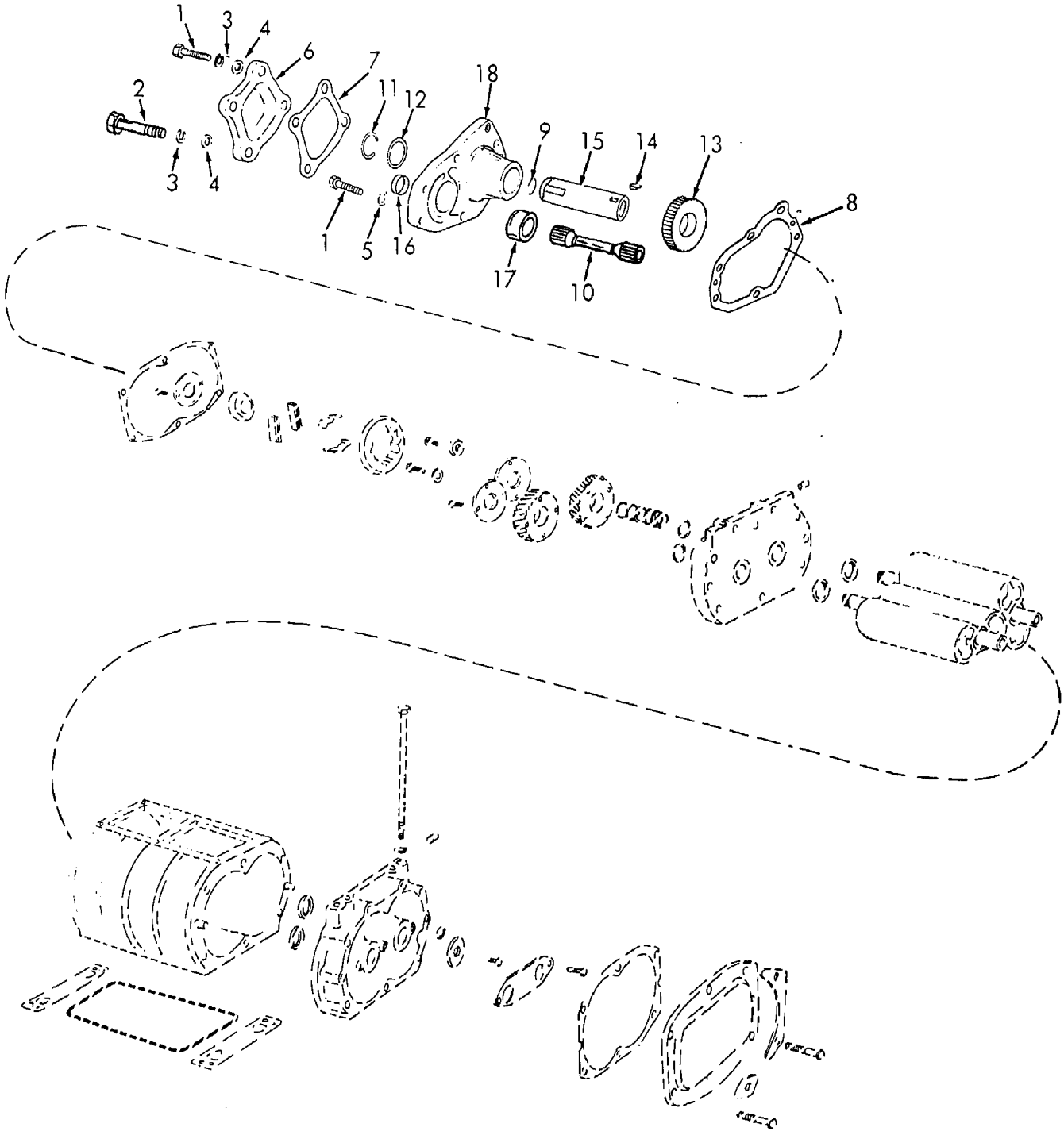

Figure 90. Blower Drive Support

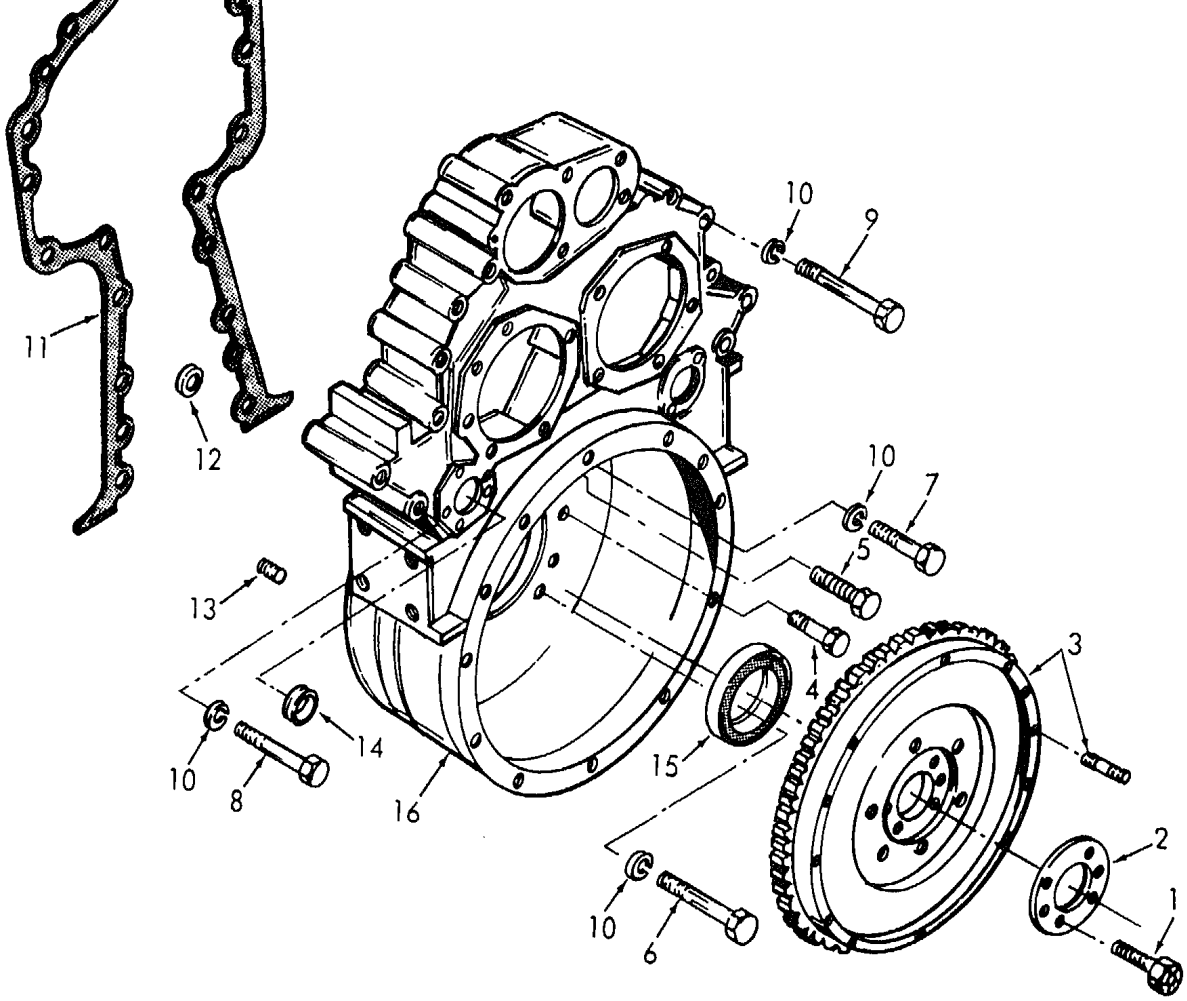

Figure 91. Flywheel and Housing

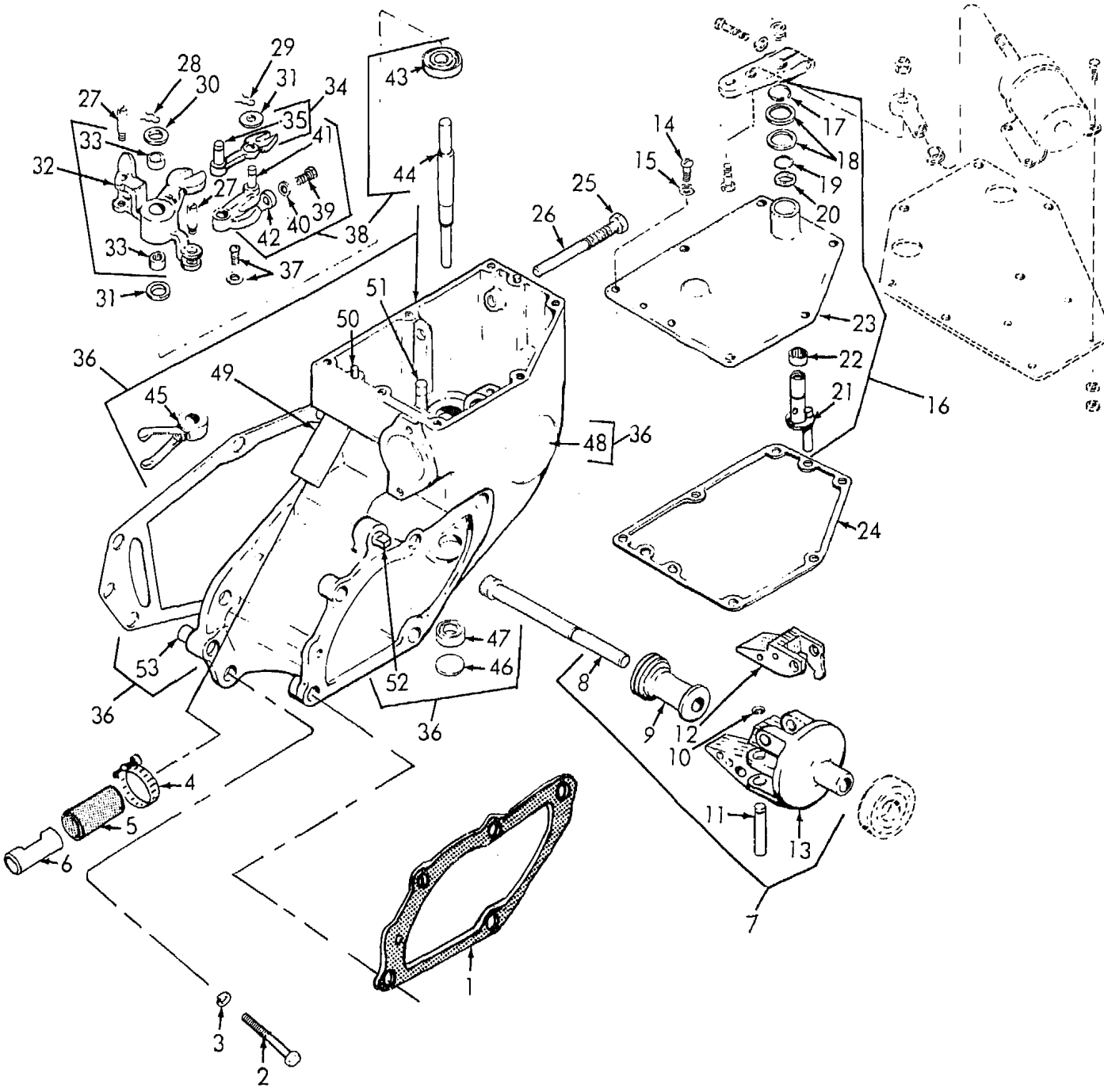

Figure 92. Governor Housing

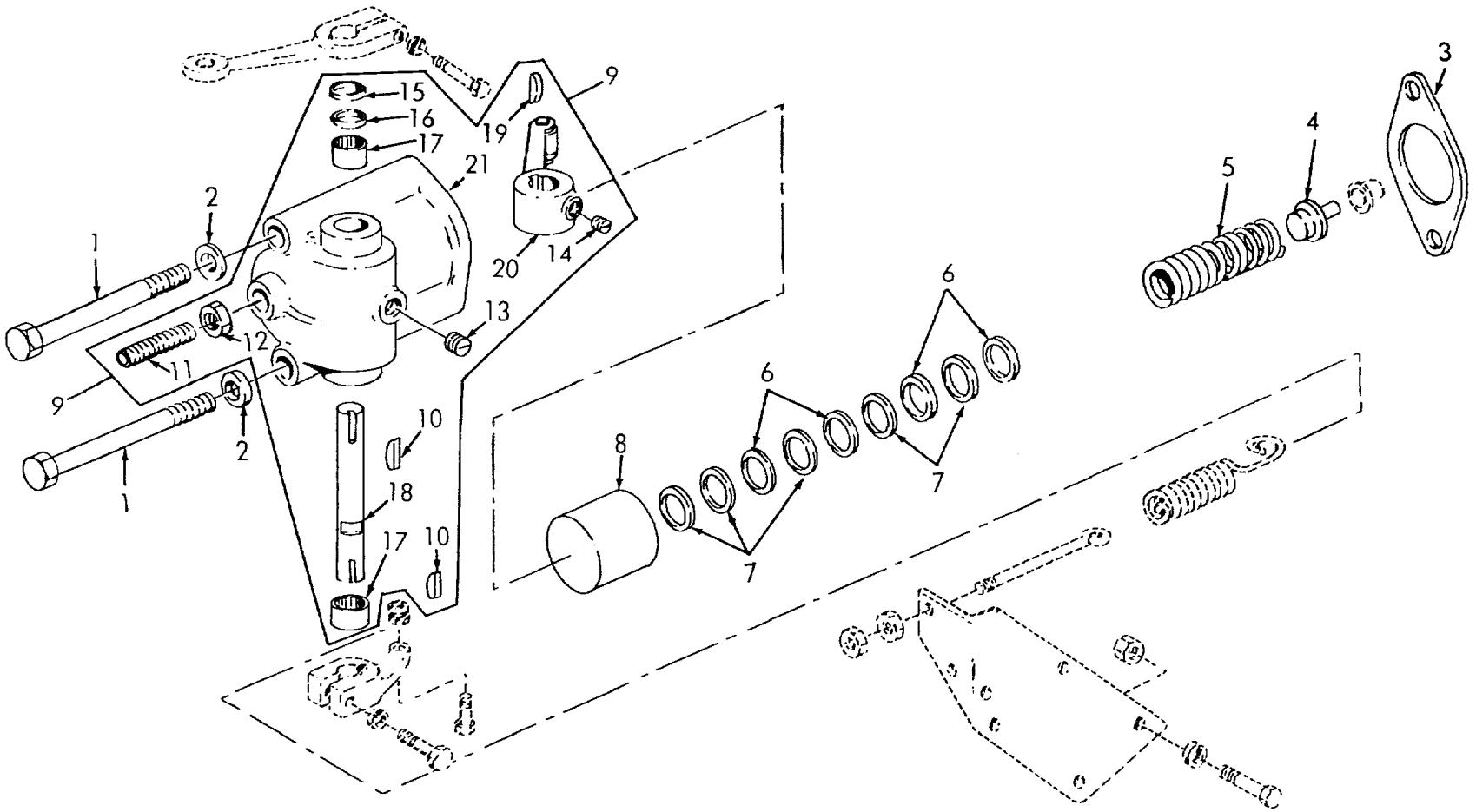

Figure 93. Governor Variable Spring Housing

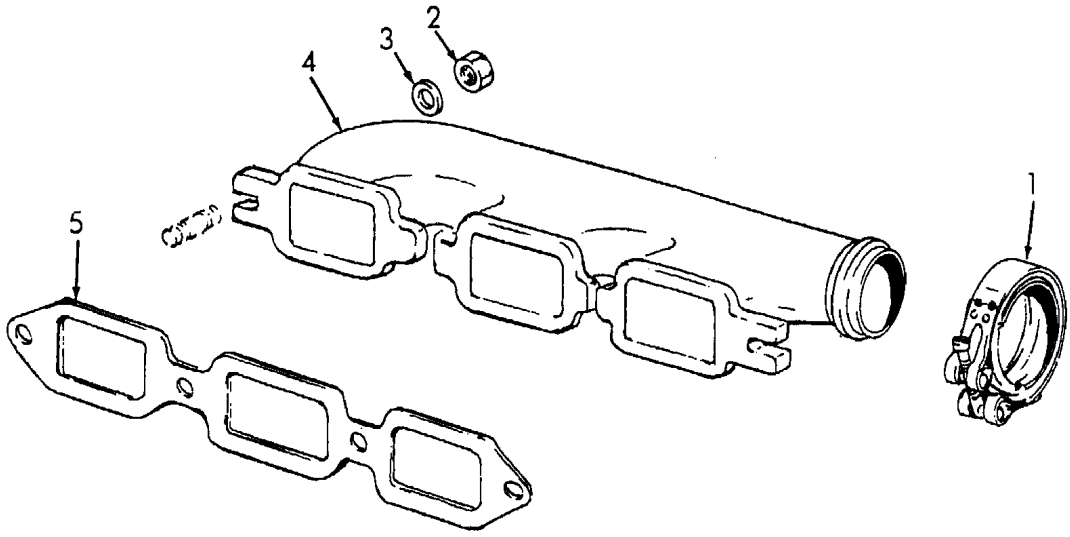

Figure 94. Exhaust Manifold

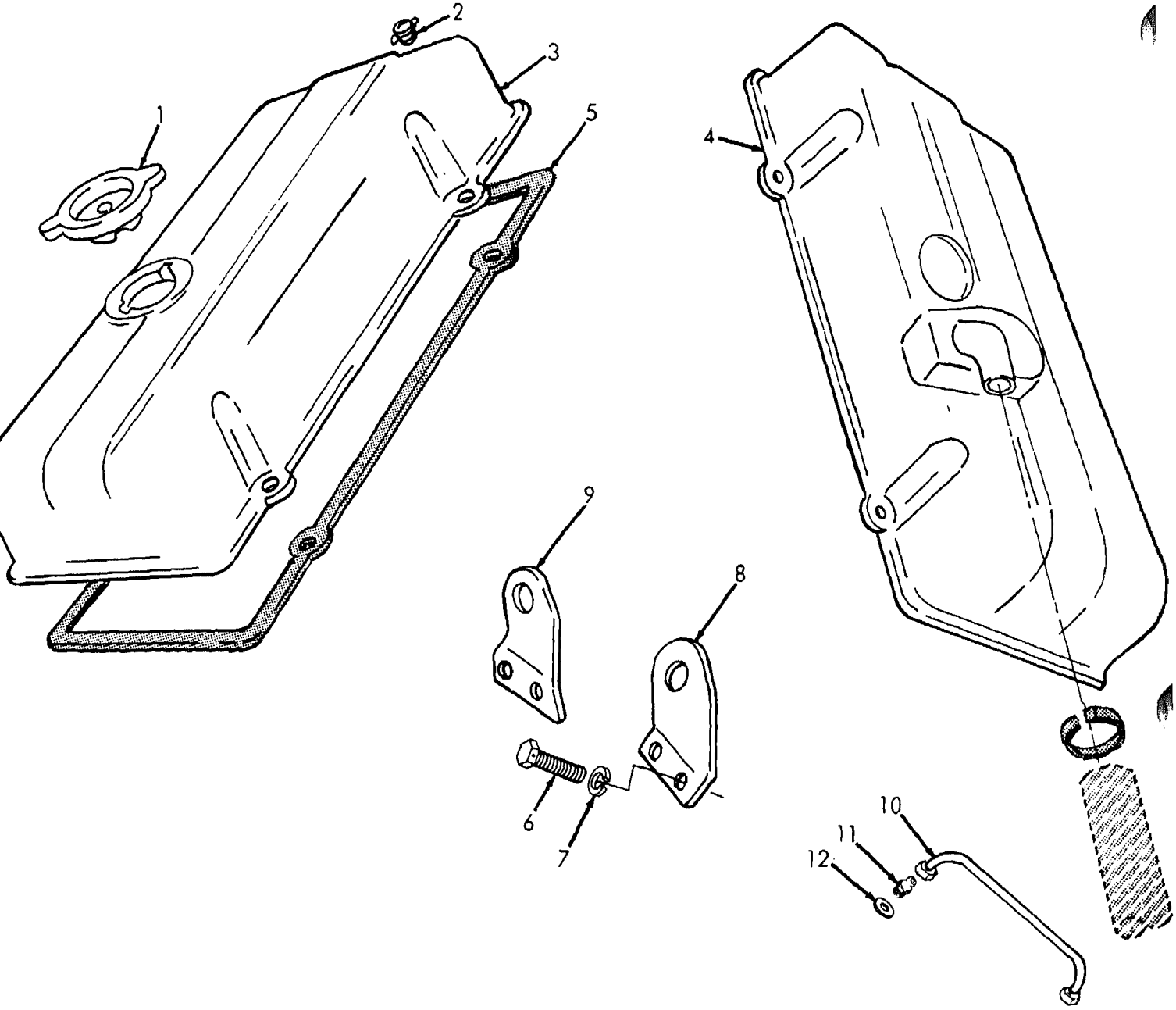

Figure 95. Cylinder Head Cover and Injector Lines

ME 3810-290-34P/95

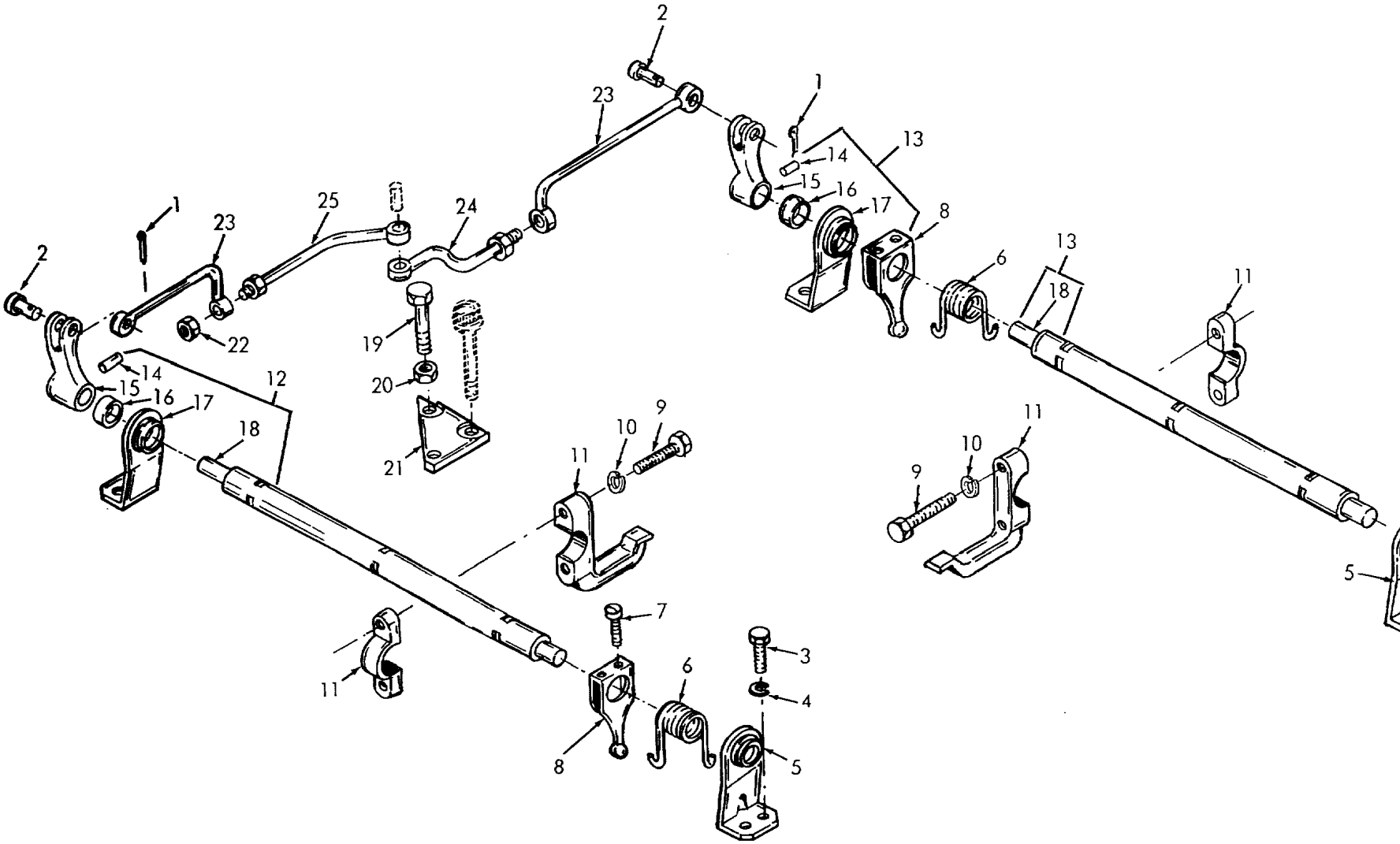

Figure 96. Fuel Injector Controls

ME 3810-290

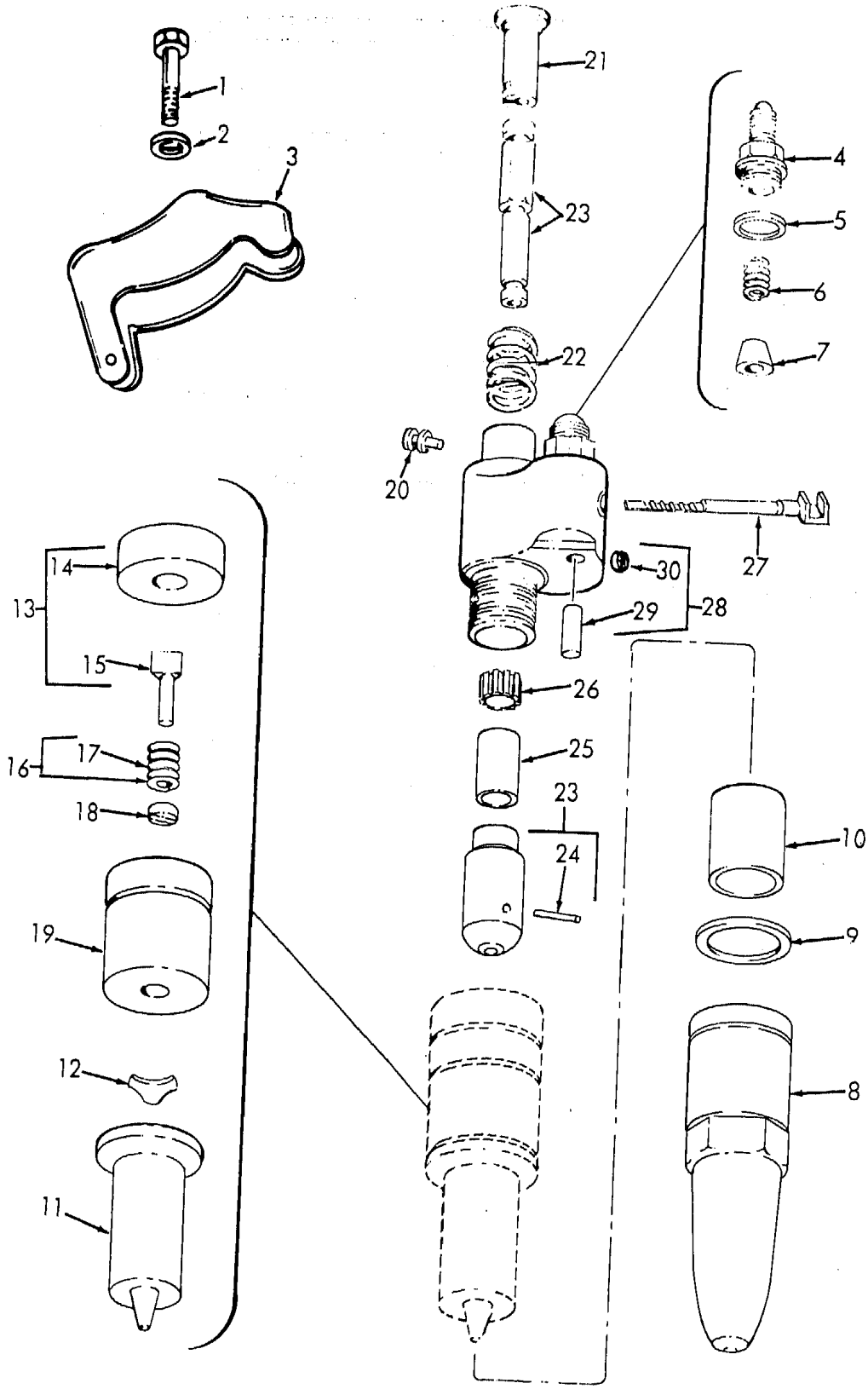

Figure 97. Fuel Injector

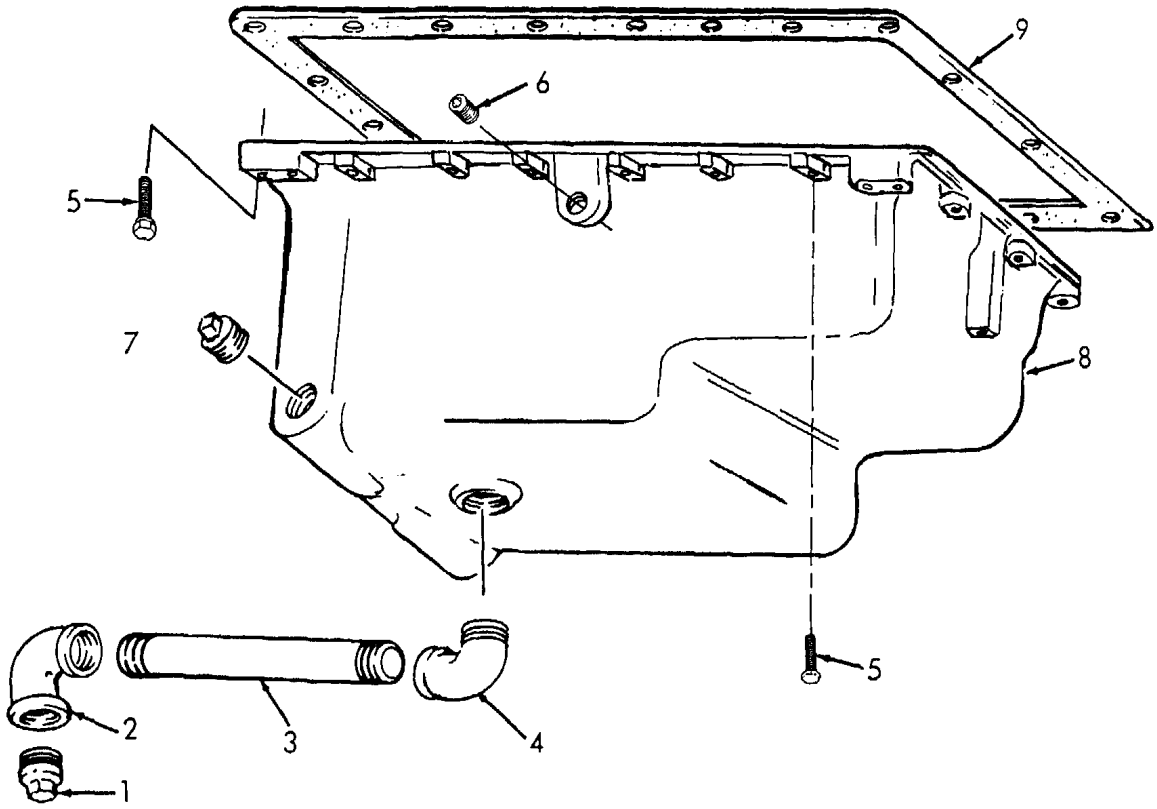

Figure 98. Oil Pan

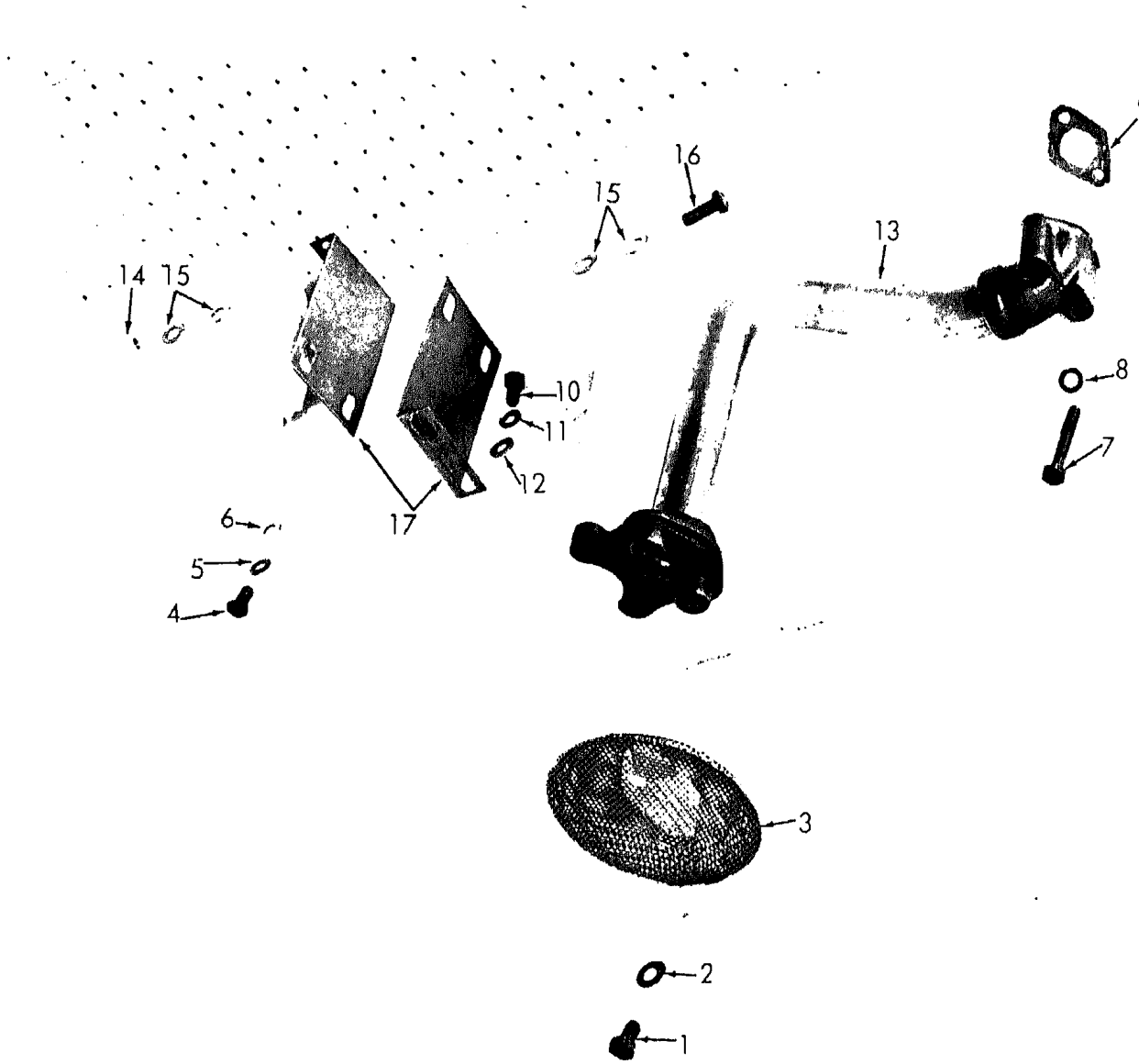

Figure 99. Oil Strainer and Tube

ME 3810-290-34P

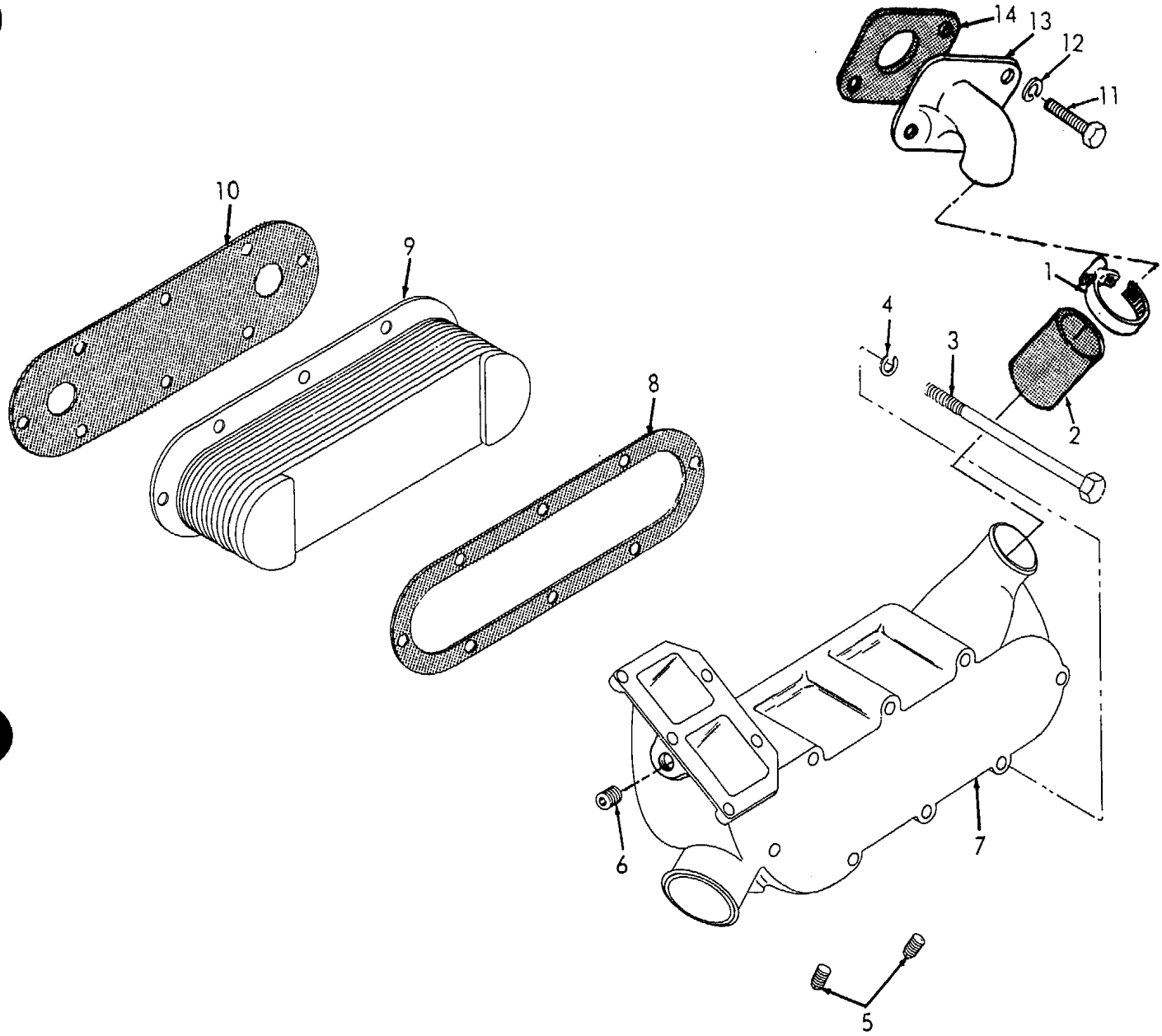

Figure 100. Oil Cooler

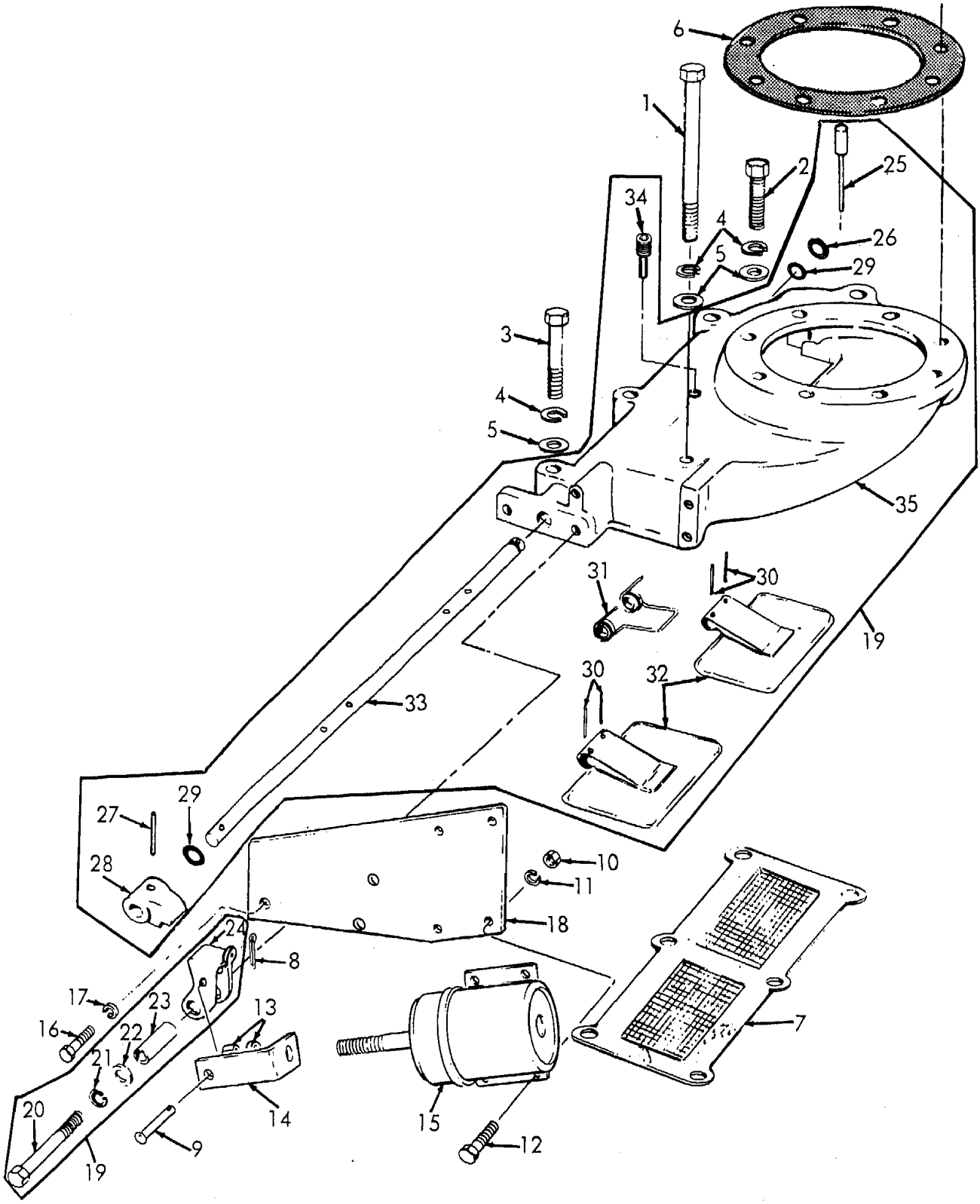

Figure 10.1. Air Inlet Housing

ME 3810-290-34P/101

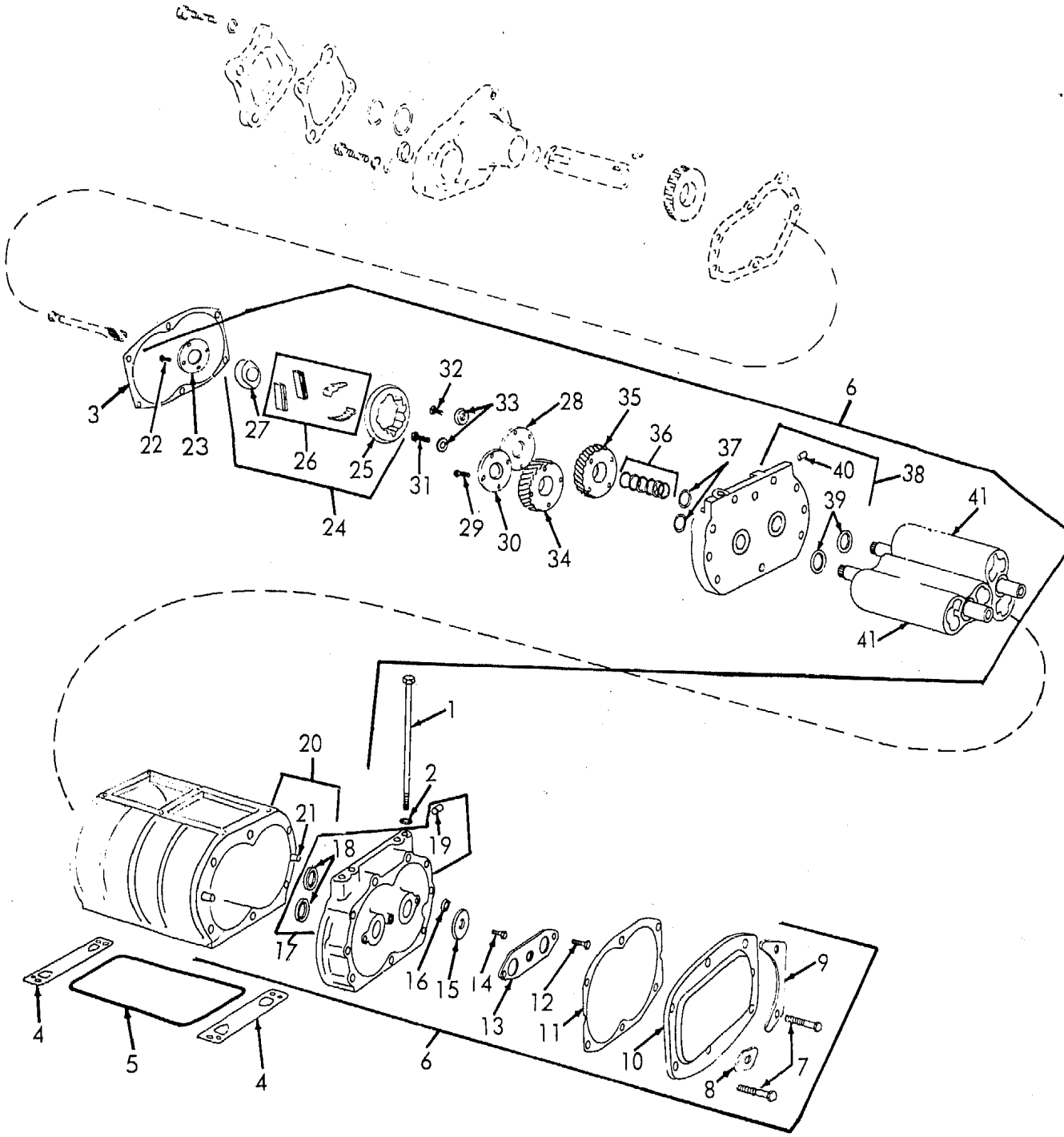

Figure 102. Blower

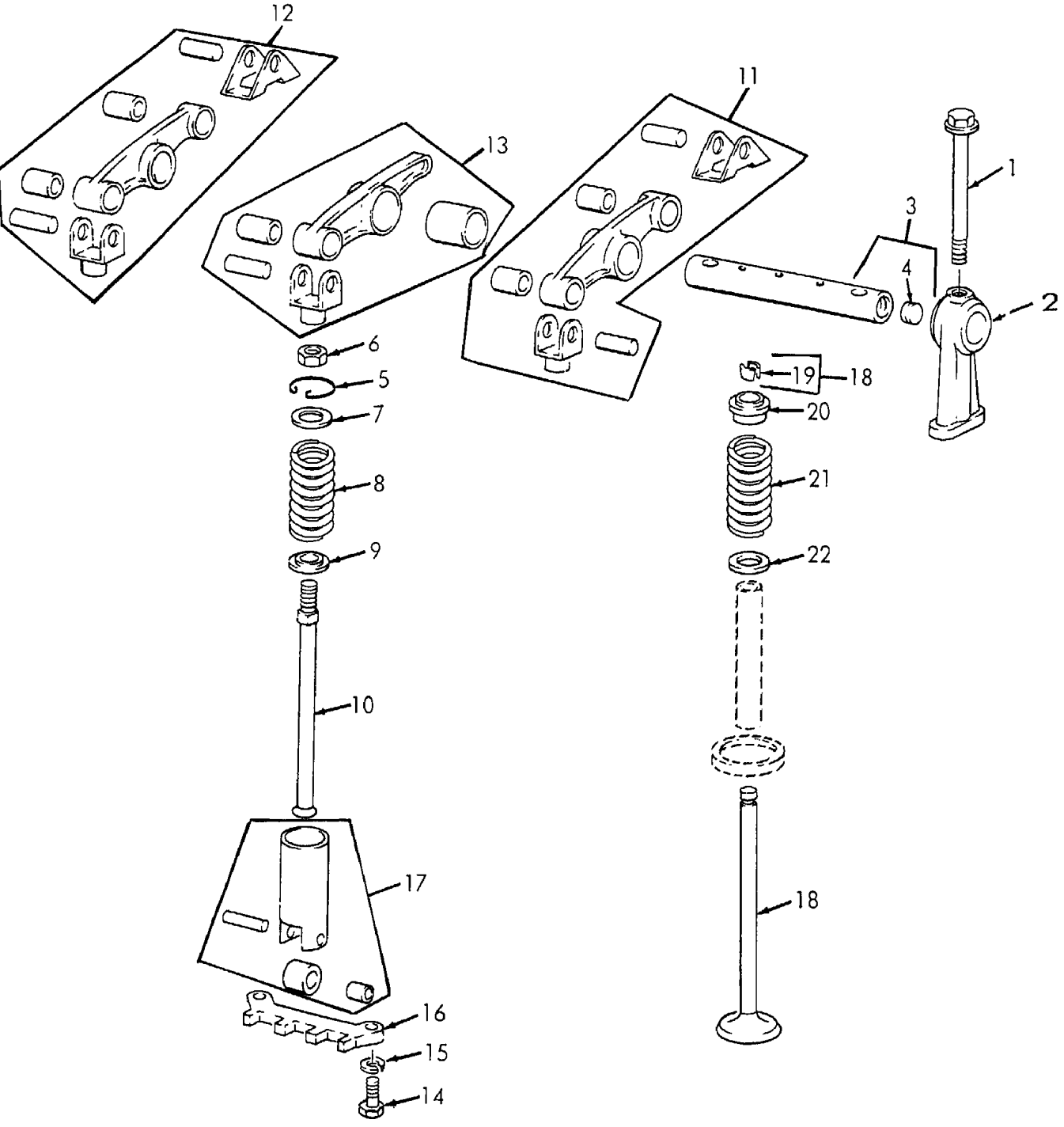

Figure 103. Rocker Arms, Valves and Cam Follower

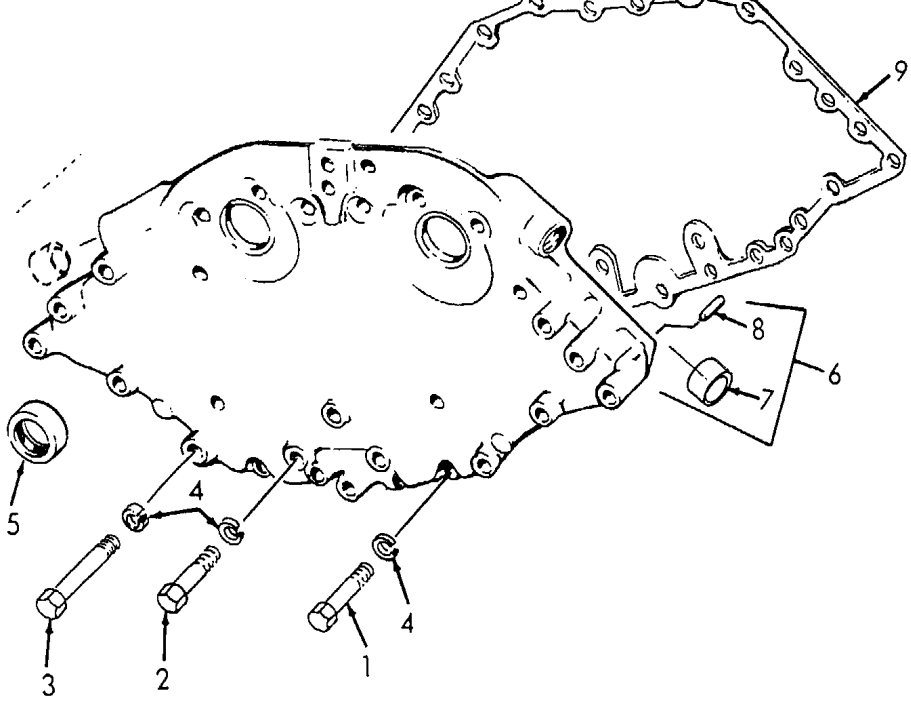

Figure 104. Upper Front Cover, Crankcase

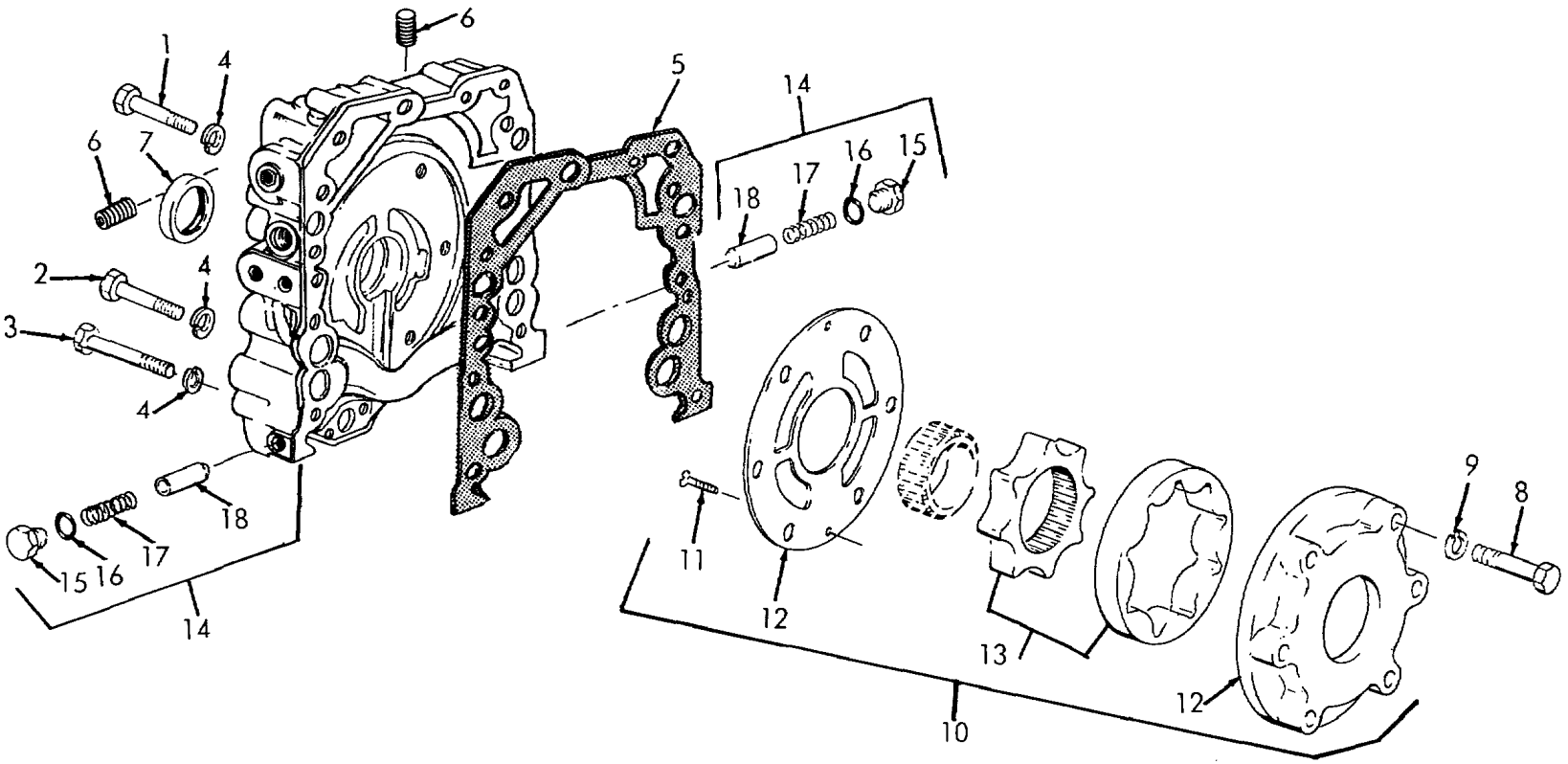

ME 3810-290-34P/105

Figure 105. Crankcase Cover and Oil Pump

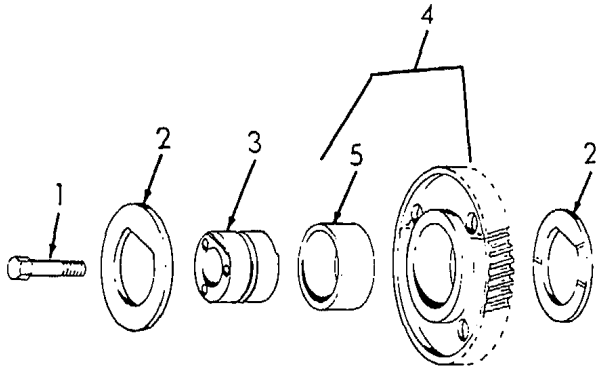

Figure 106. Idler Gear Timing

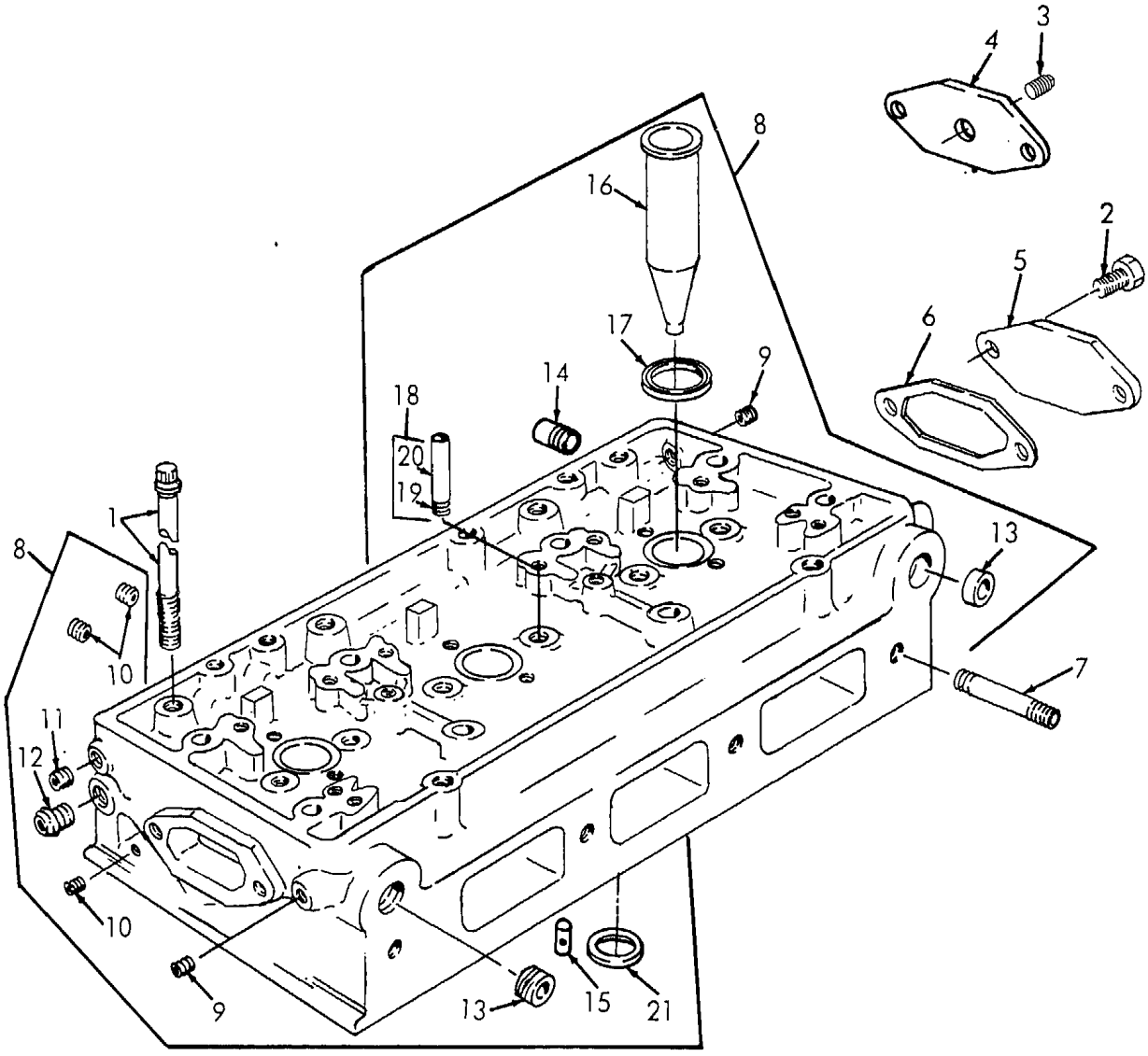

ME 3810-290-34P/107

Figure 107. Cylinder Head

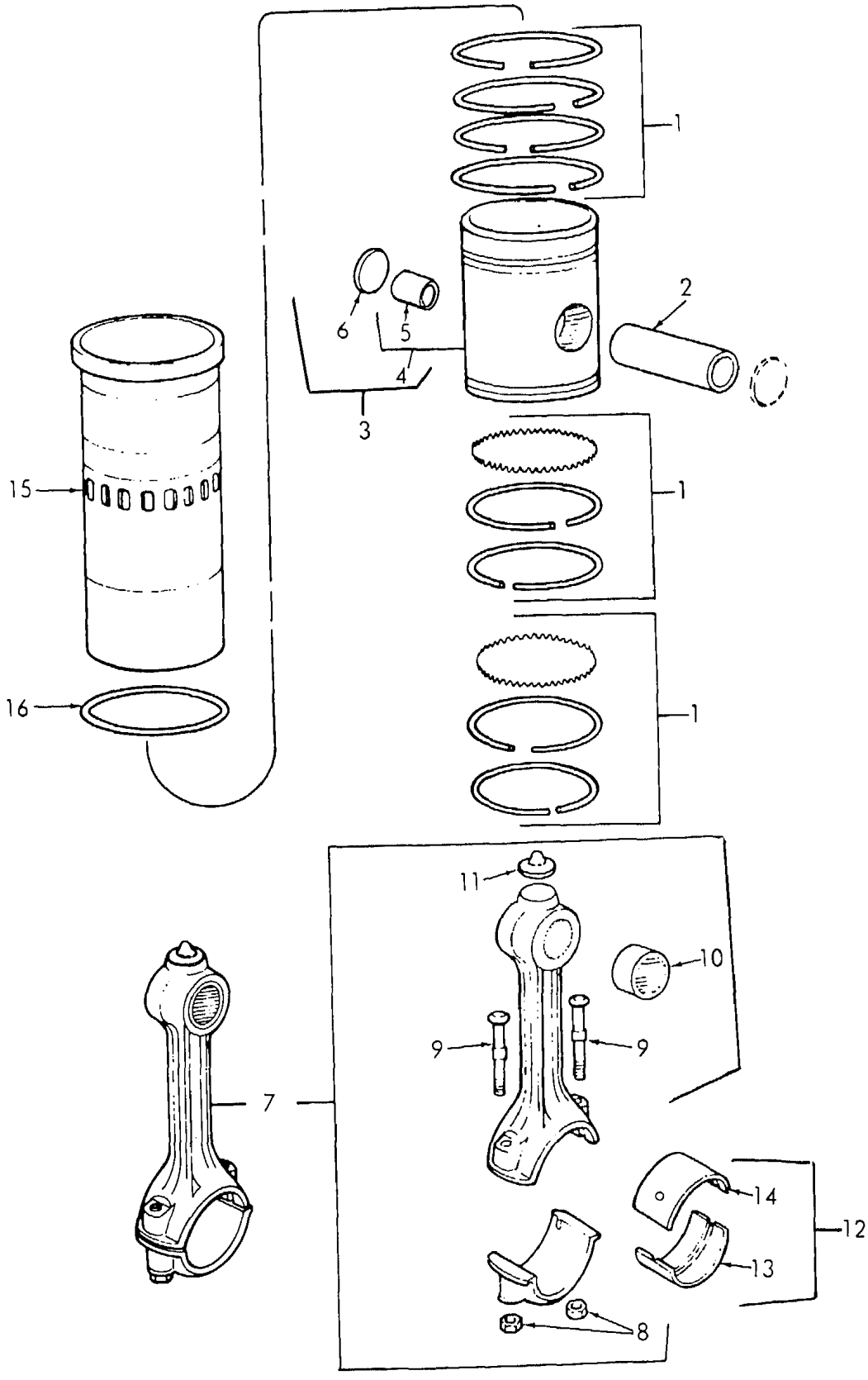

Figure 108. Piston and Connecting Rod

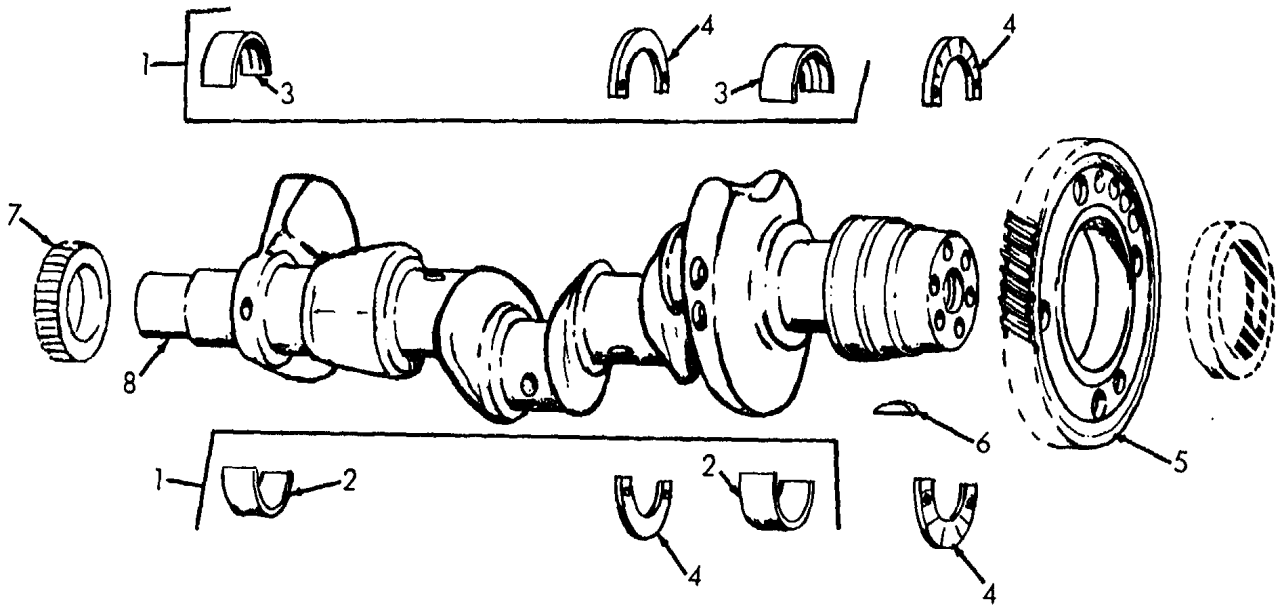

Figure 109. Crankshaft

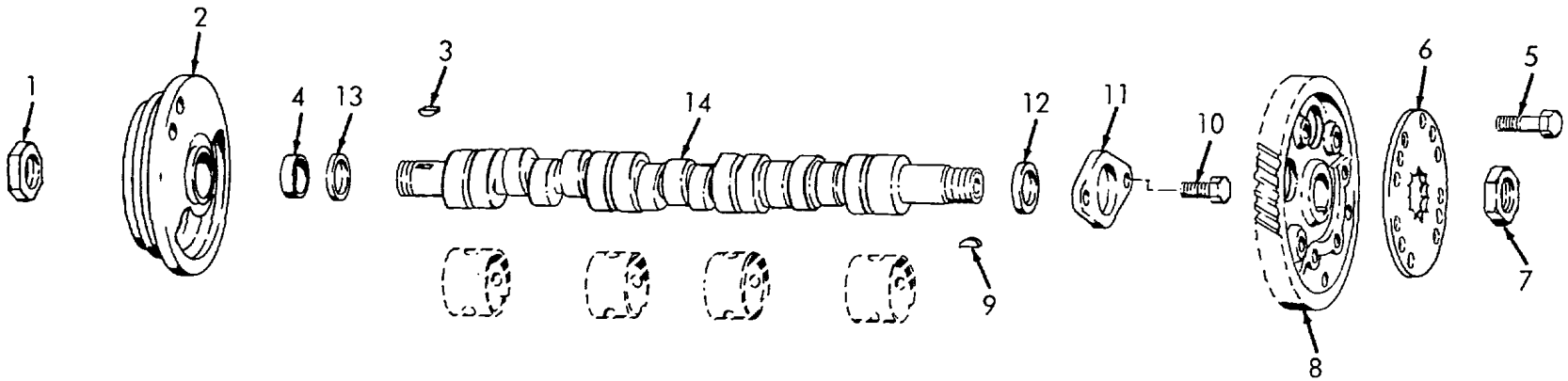

Figure 110. Camshaft, Gear and Pulley

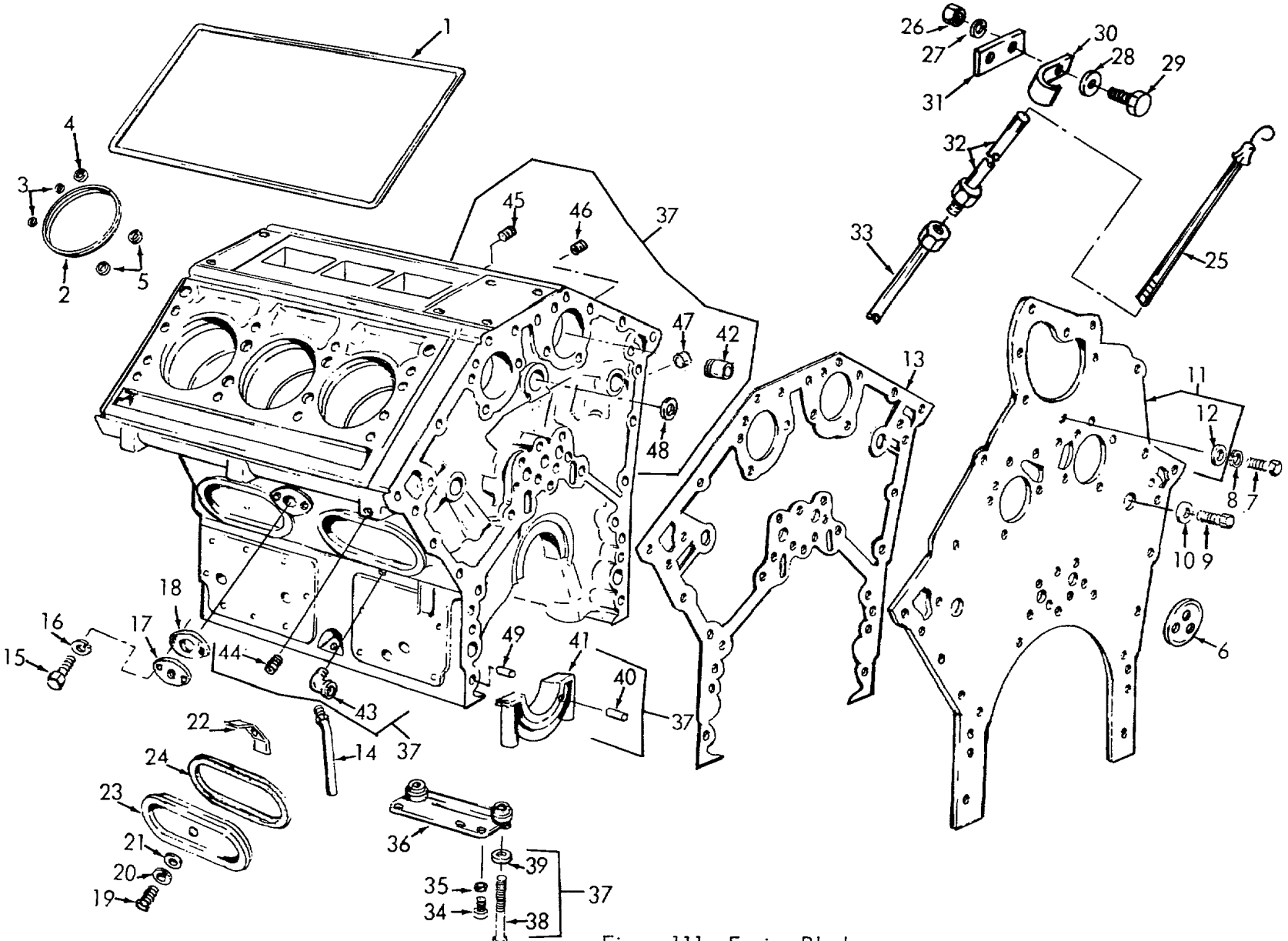

Figure 111. Engine Block

ME 3810-290-34P/111

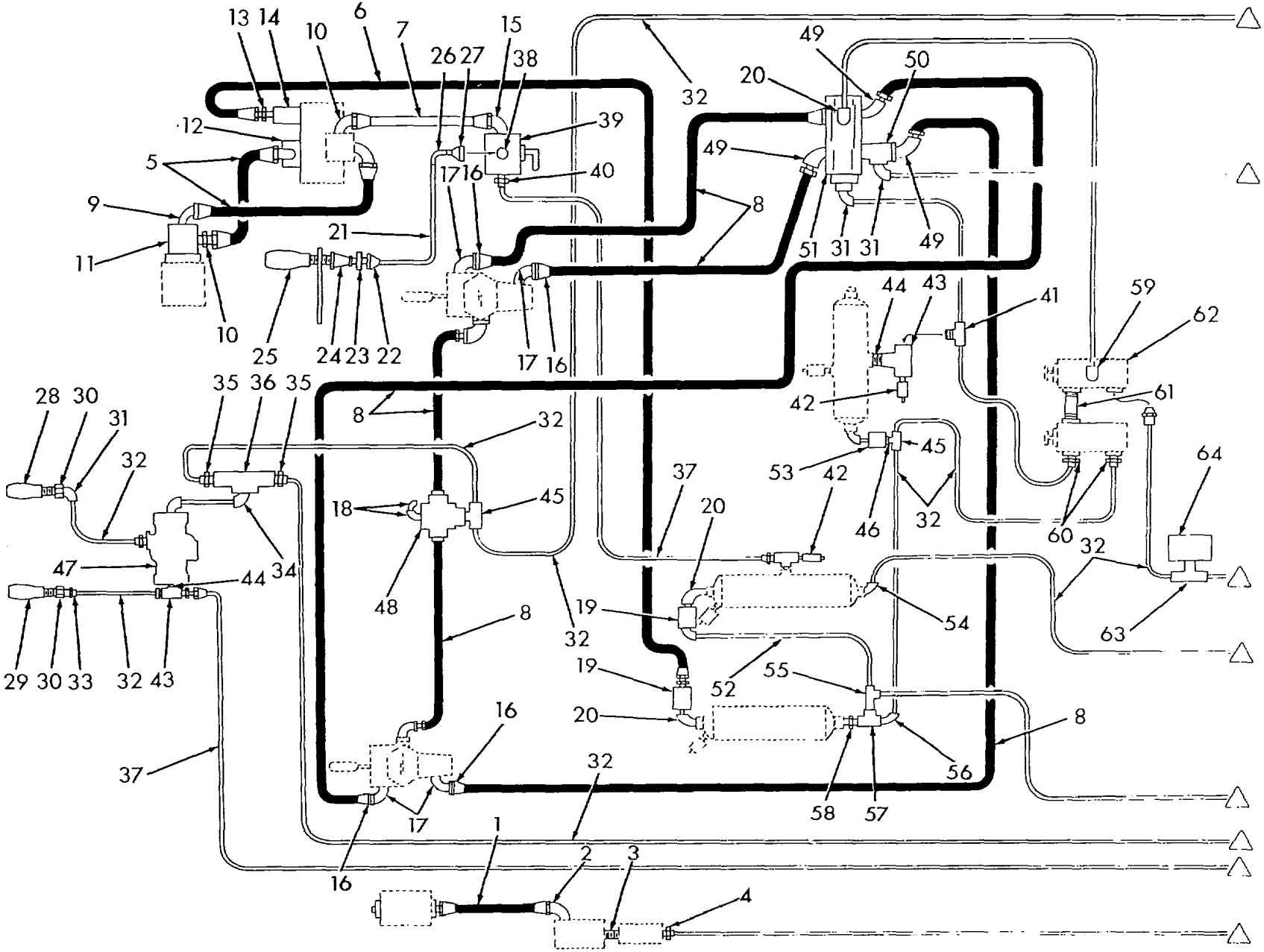

Figure 112. Air Piping

ME 3810-290-34P/112

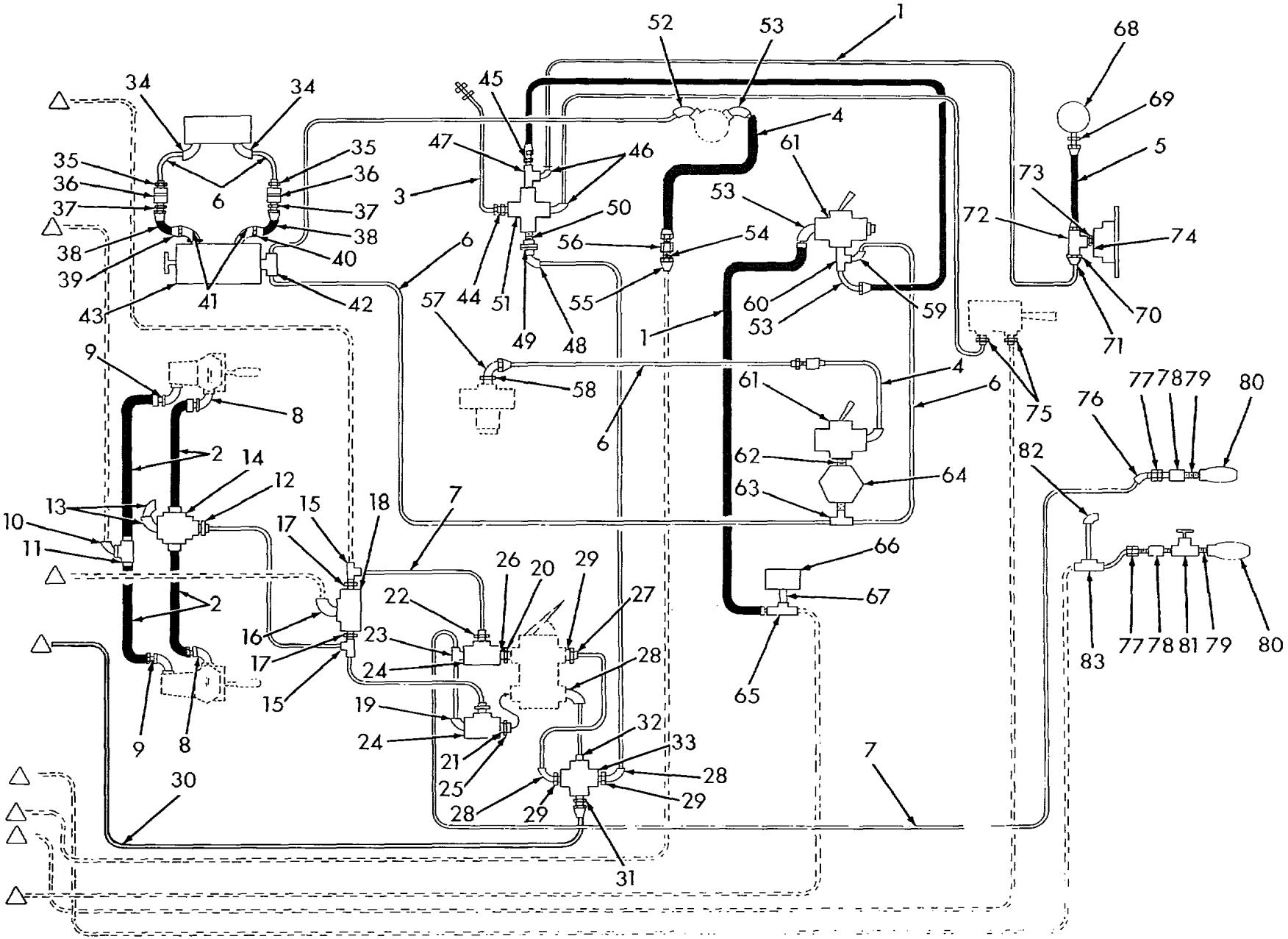

Figure 113. Air Piping

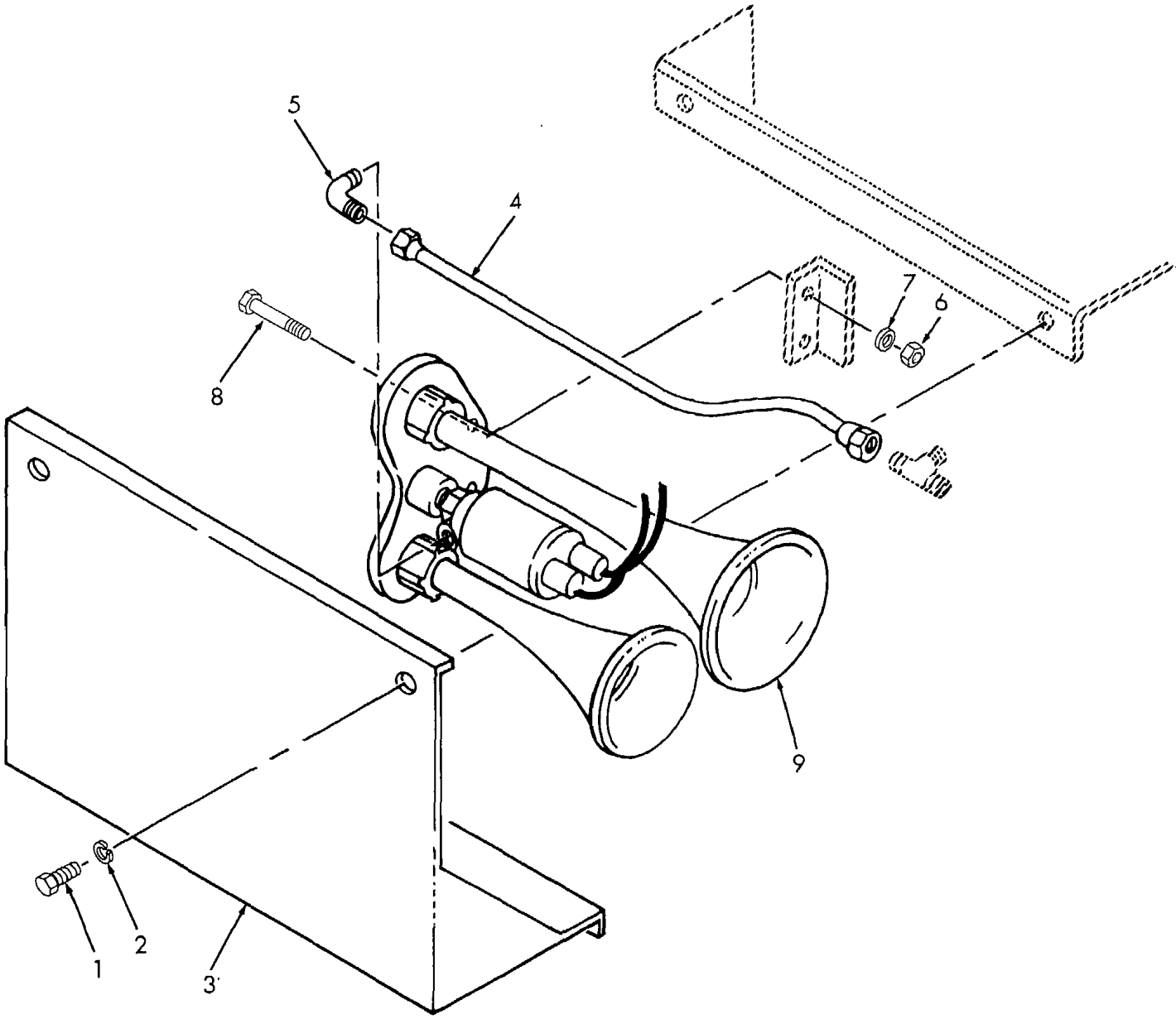

Figure 114. Air Horn

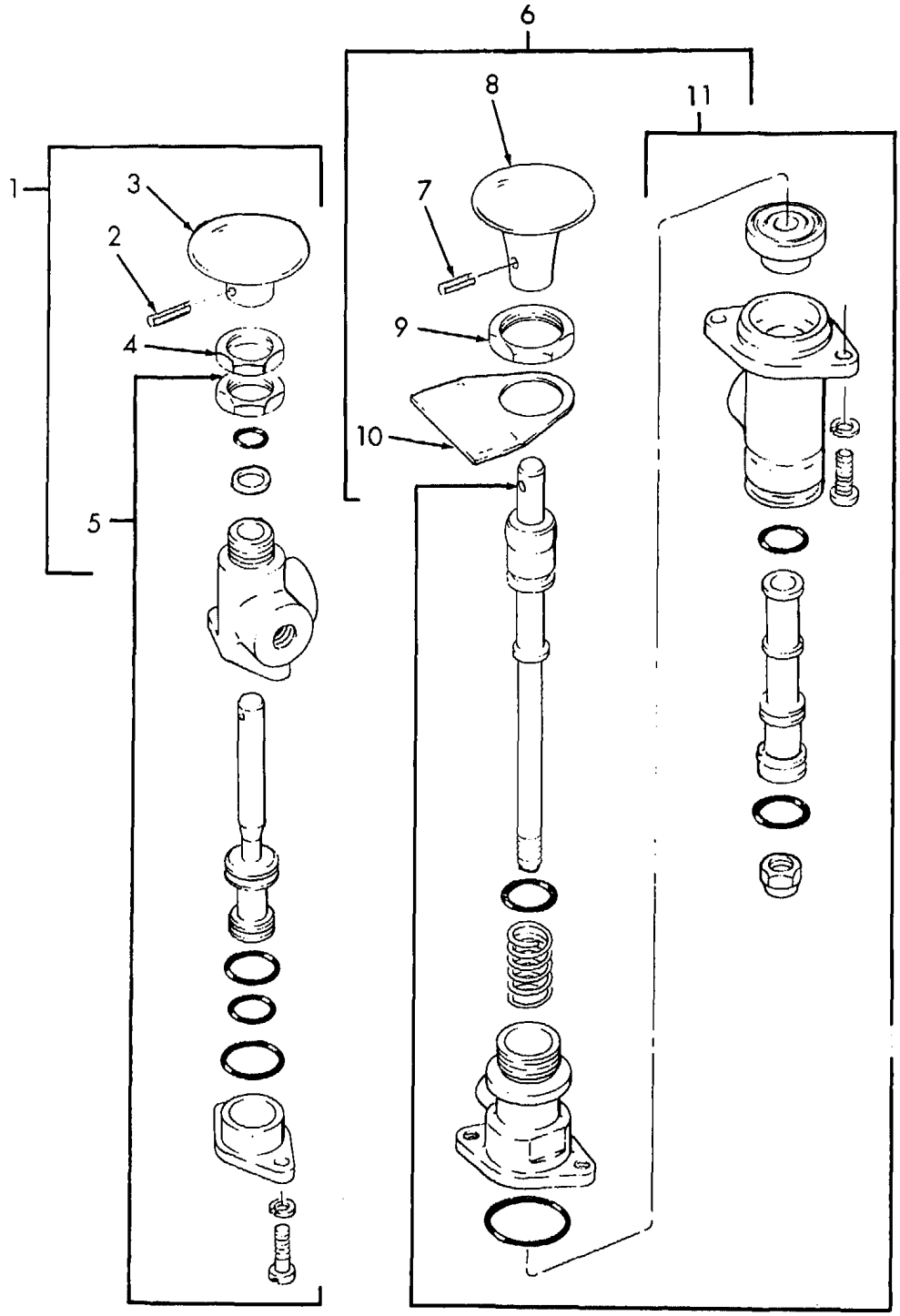

Figure 115. Air System Control Valves

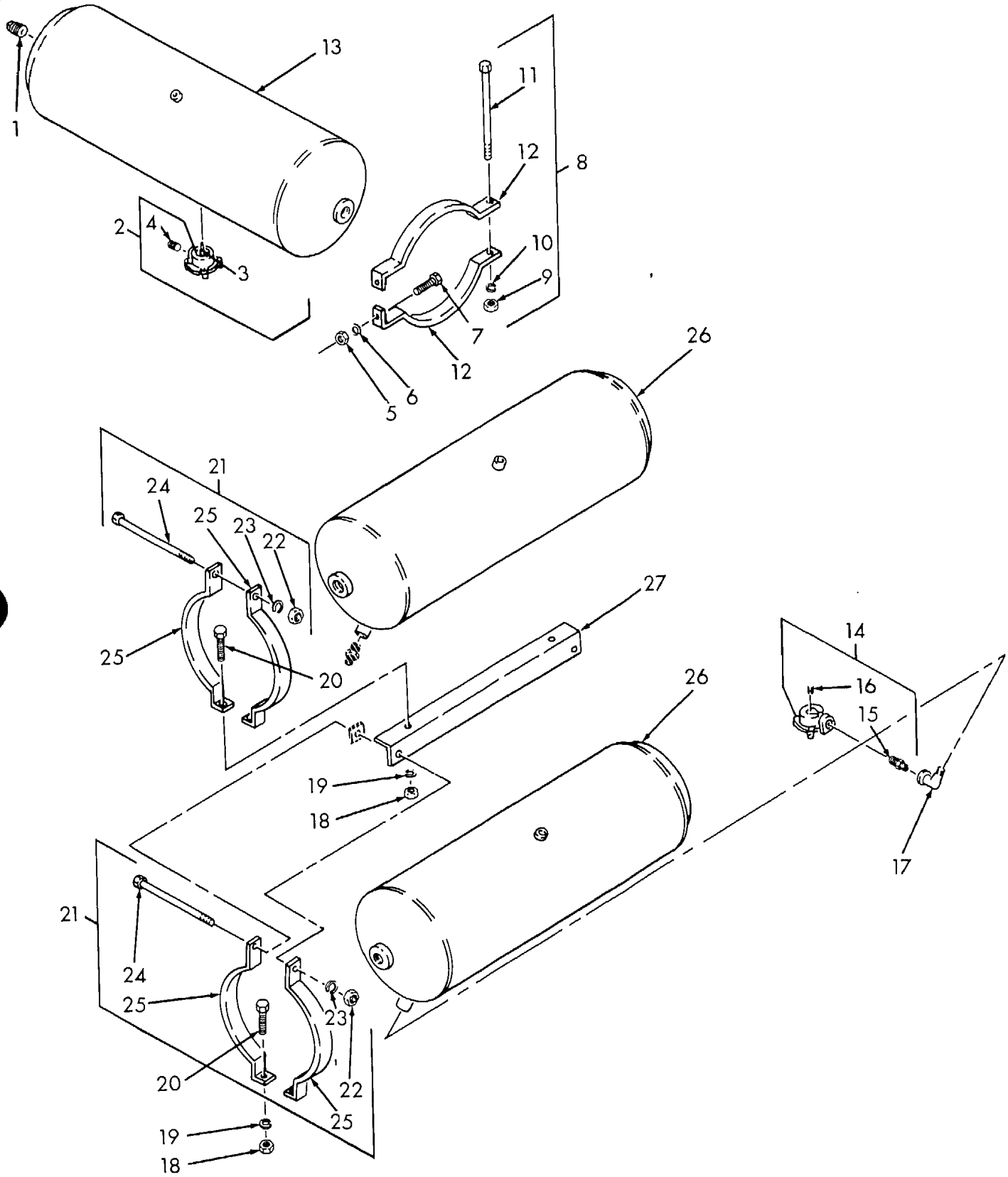

Figure 116. Air Tanks

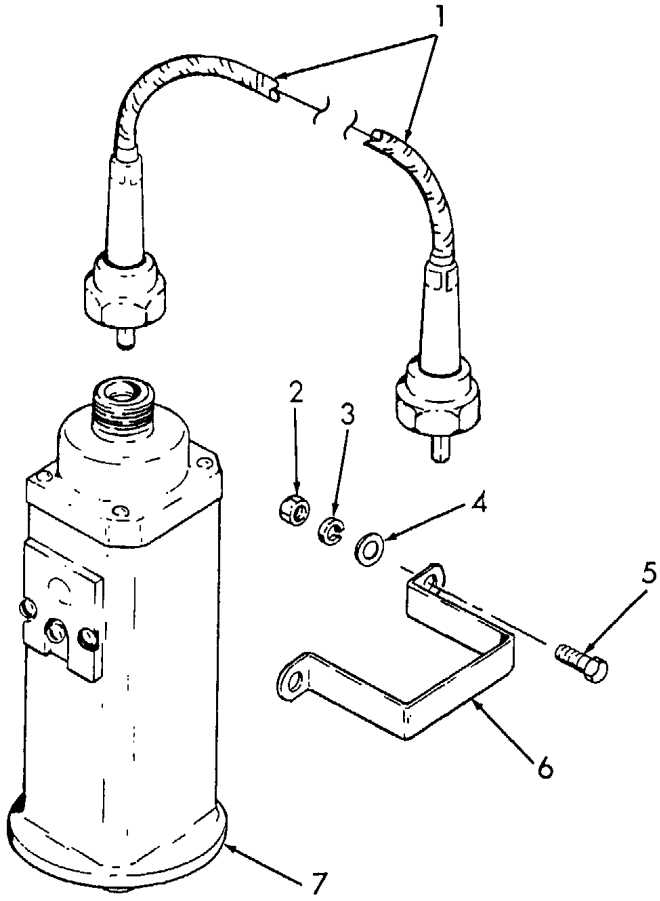

Figure 117. Speed Sensing Switch

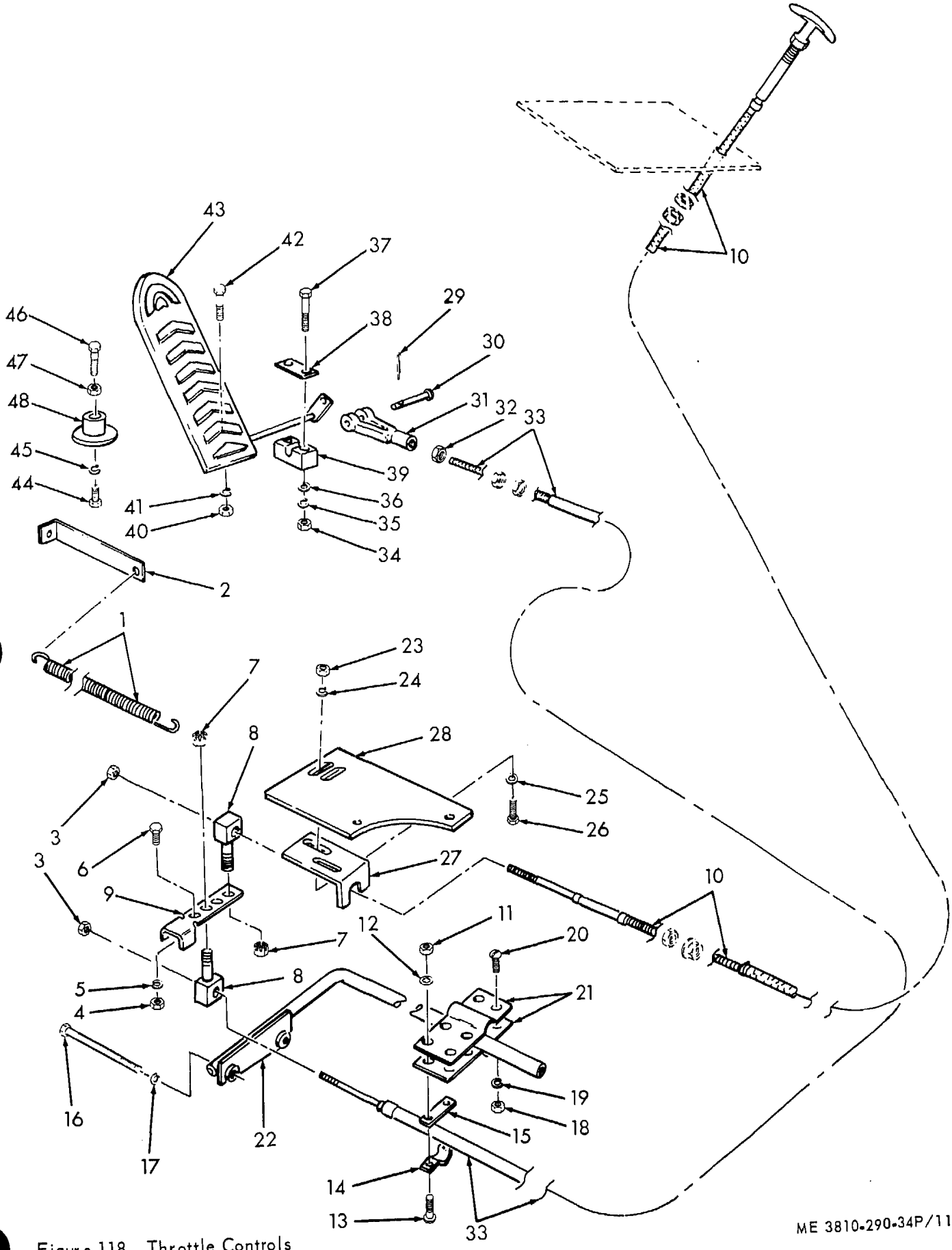

Figure 118. Throttle Controls

ME 3810-290-34P/118

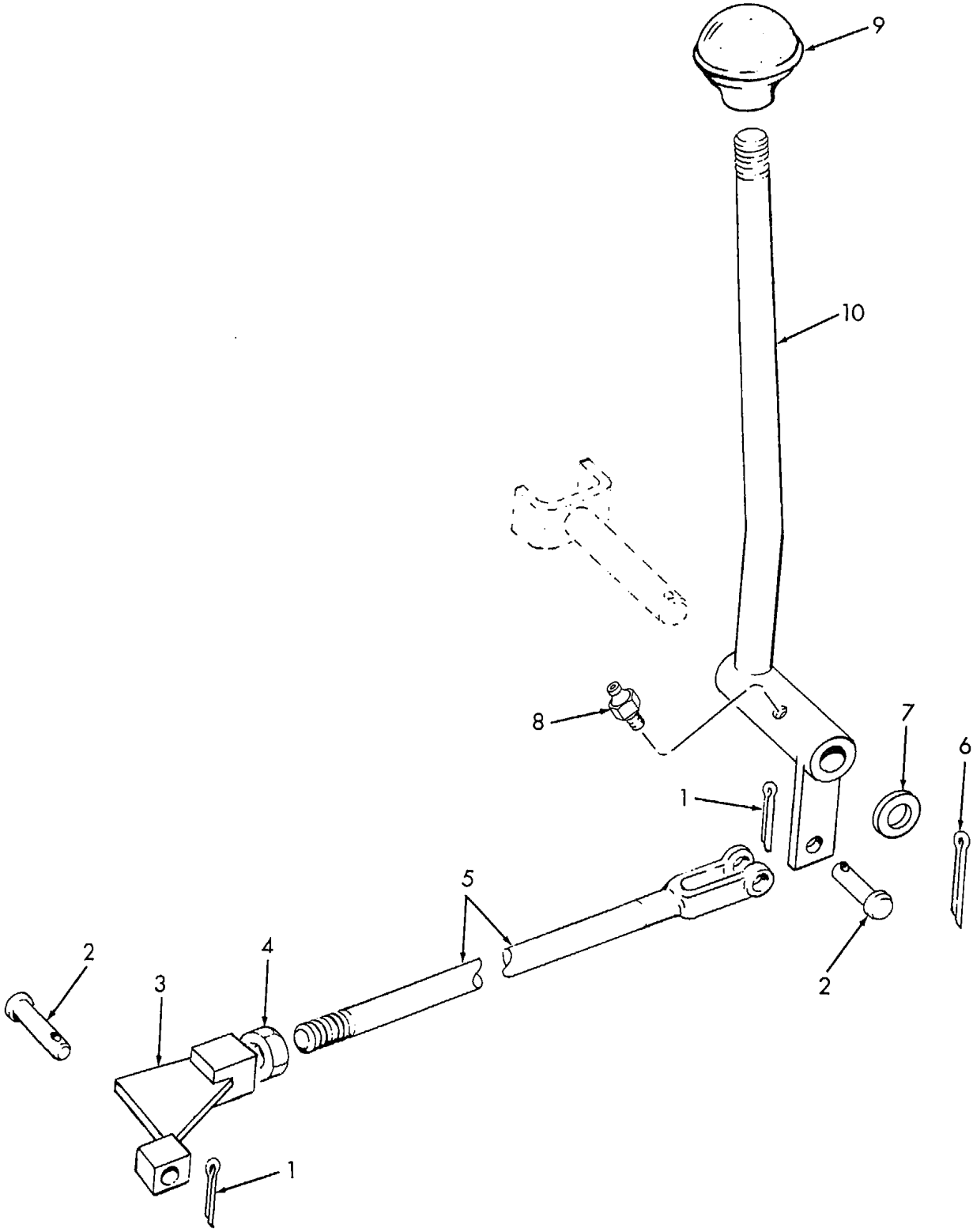

Figure 119. Transfer Shift Control

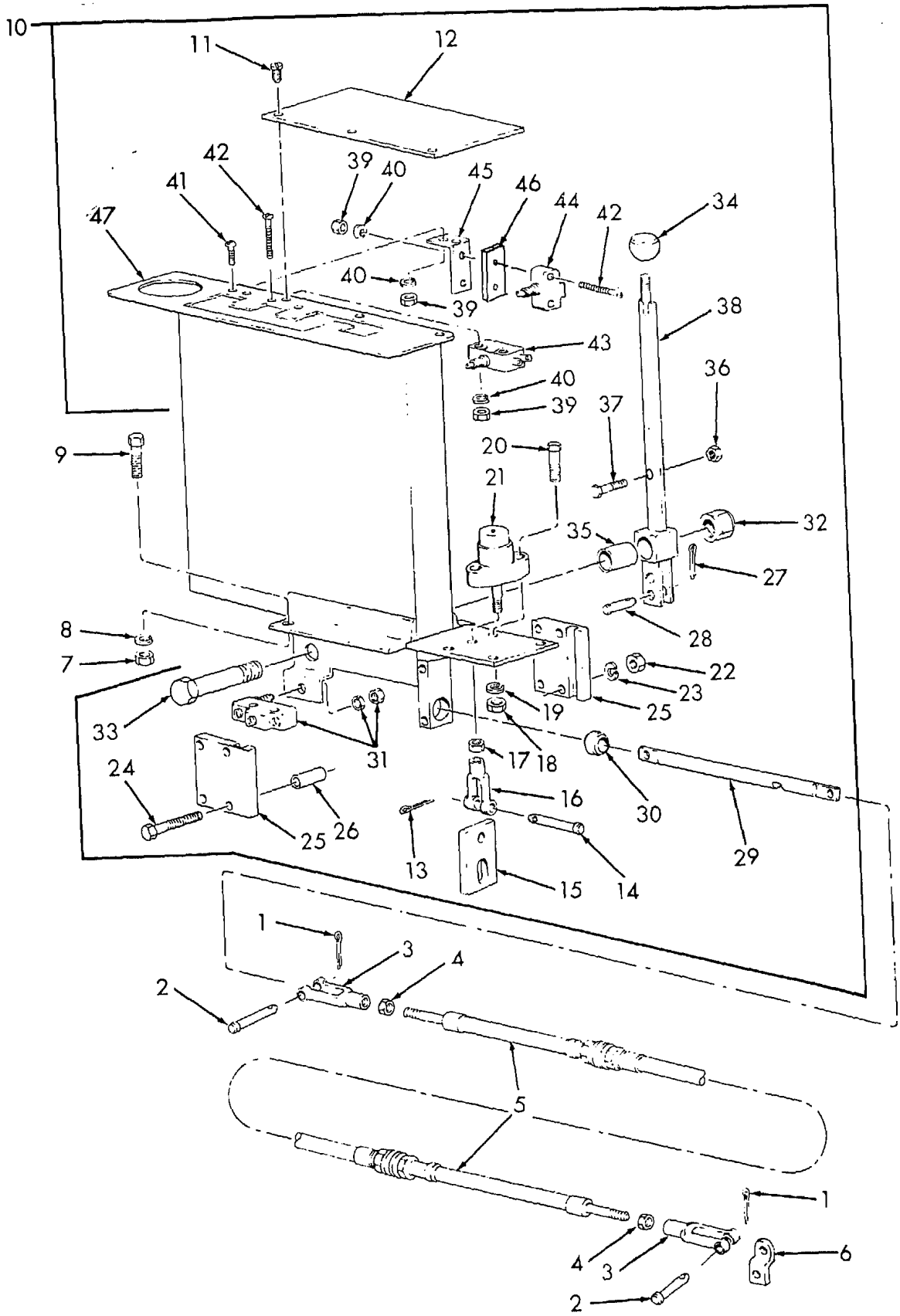

Figure 120. Transmission Shift Tower

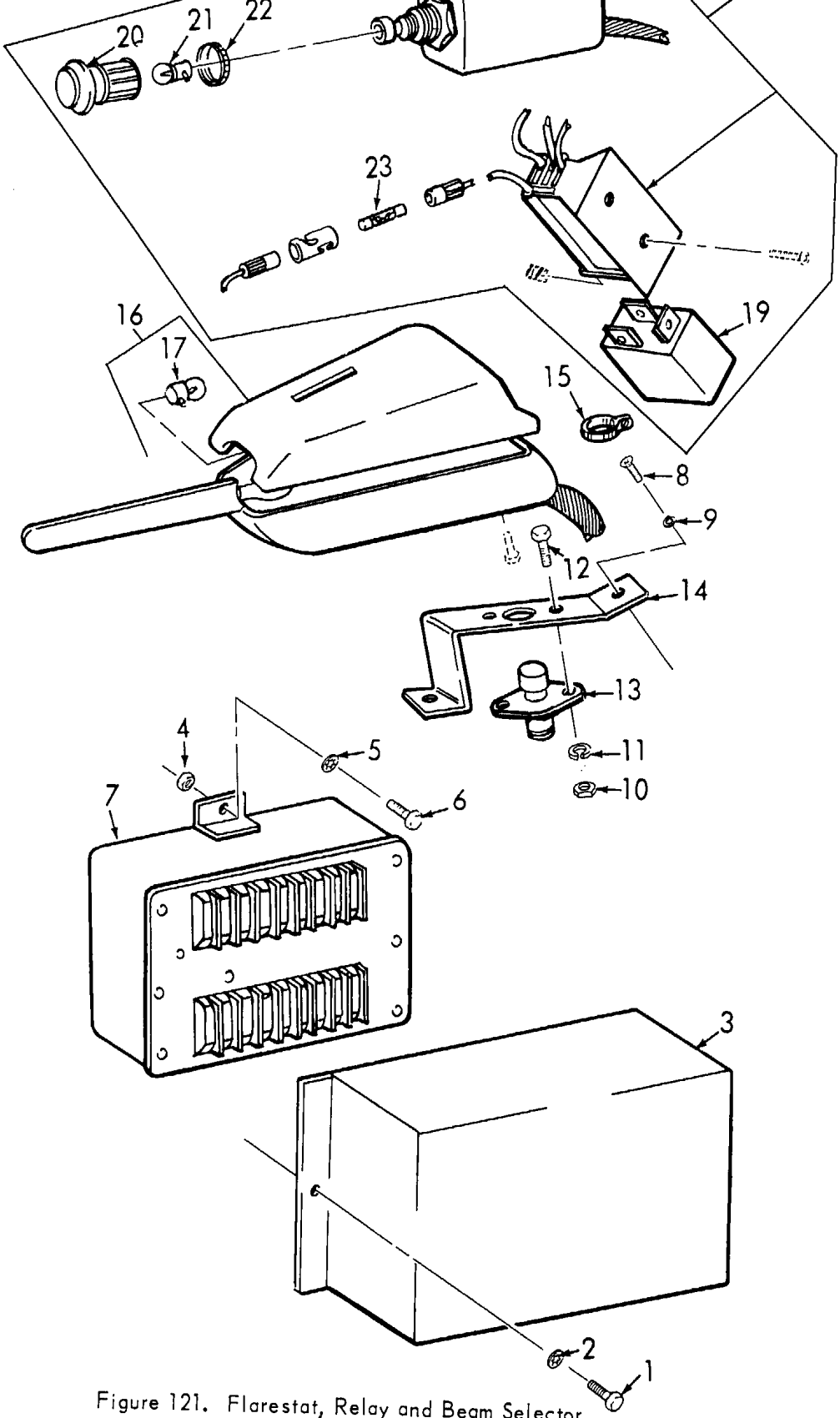

Figure 121. Flarestat, Relay and Beam Selector

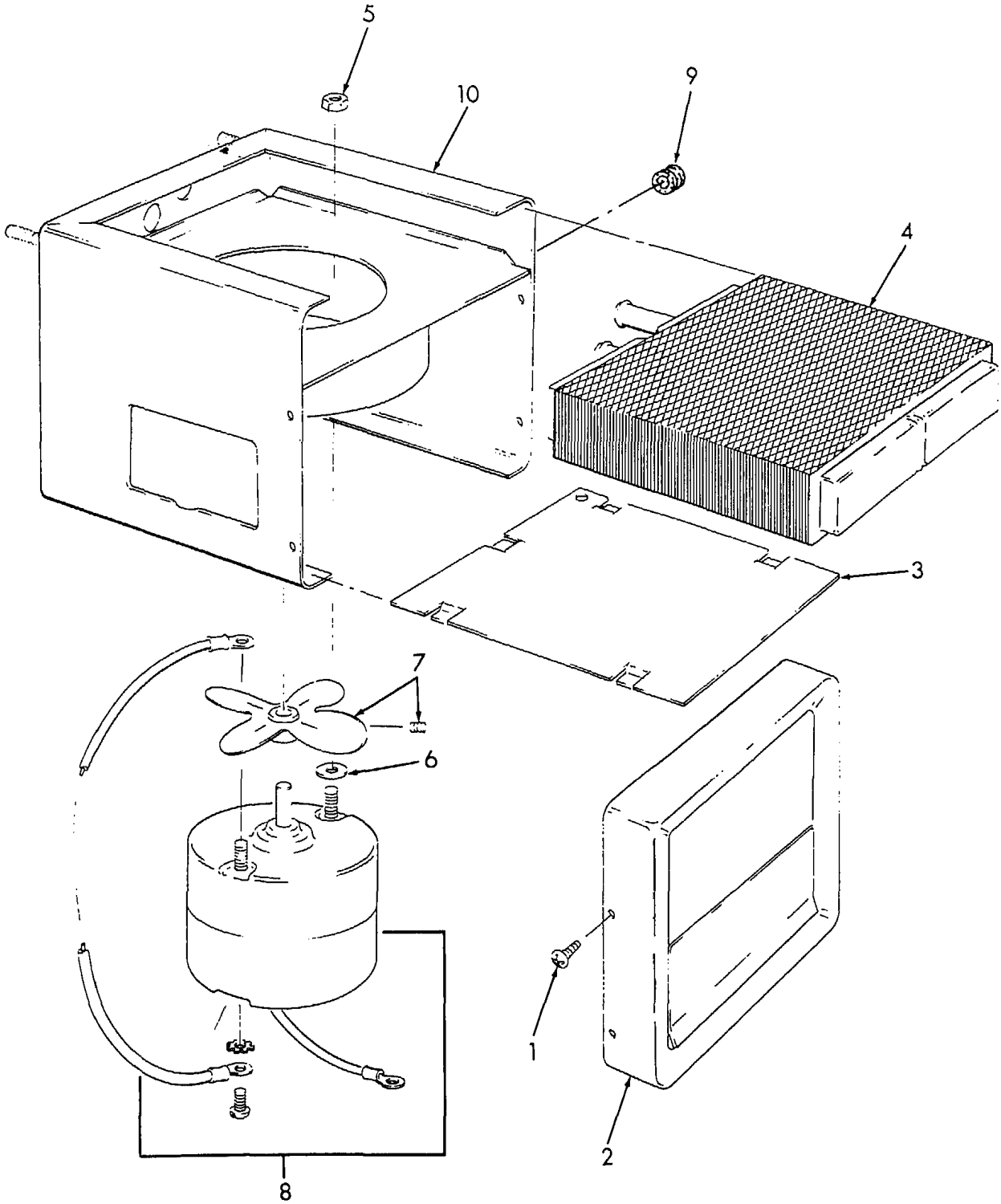

Figure 122. Heater

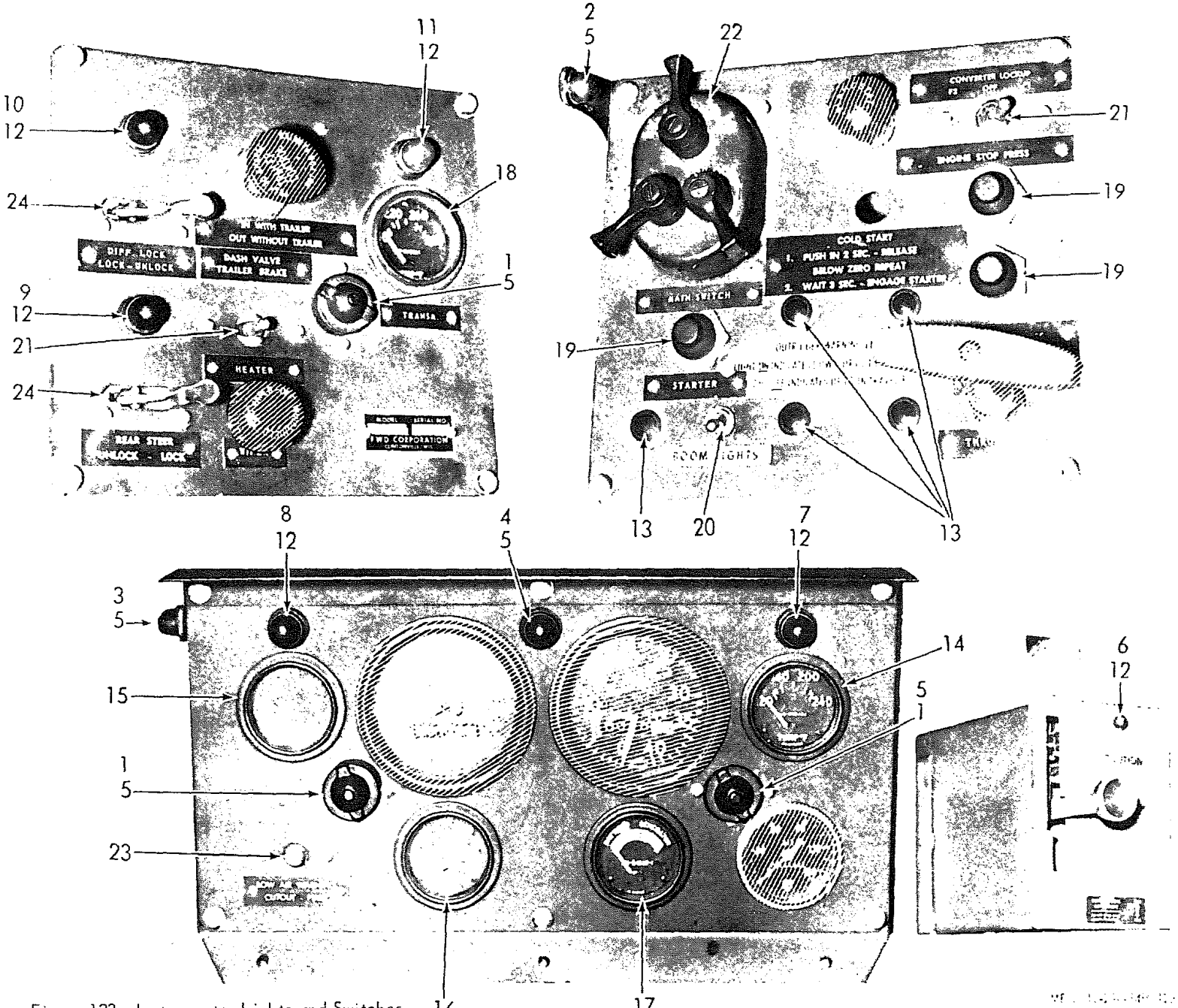

Figure 123. Instruments, Lights and Switches

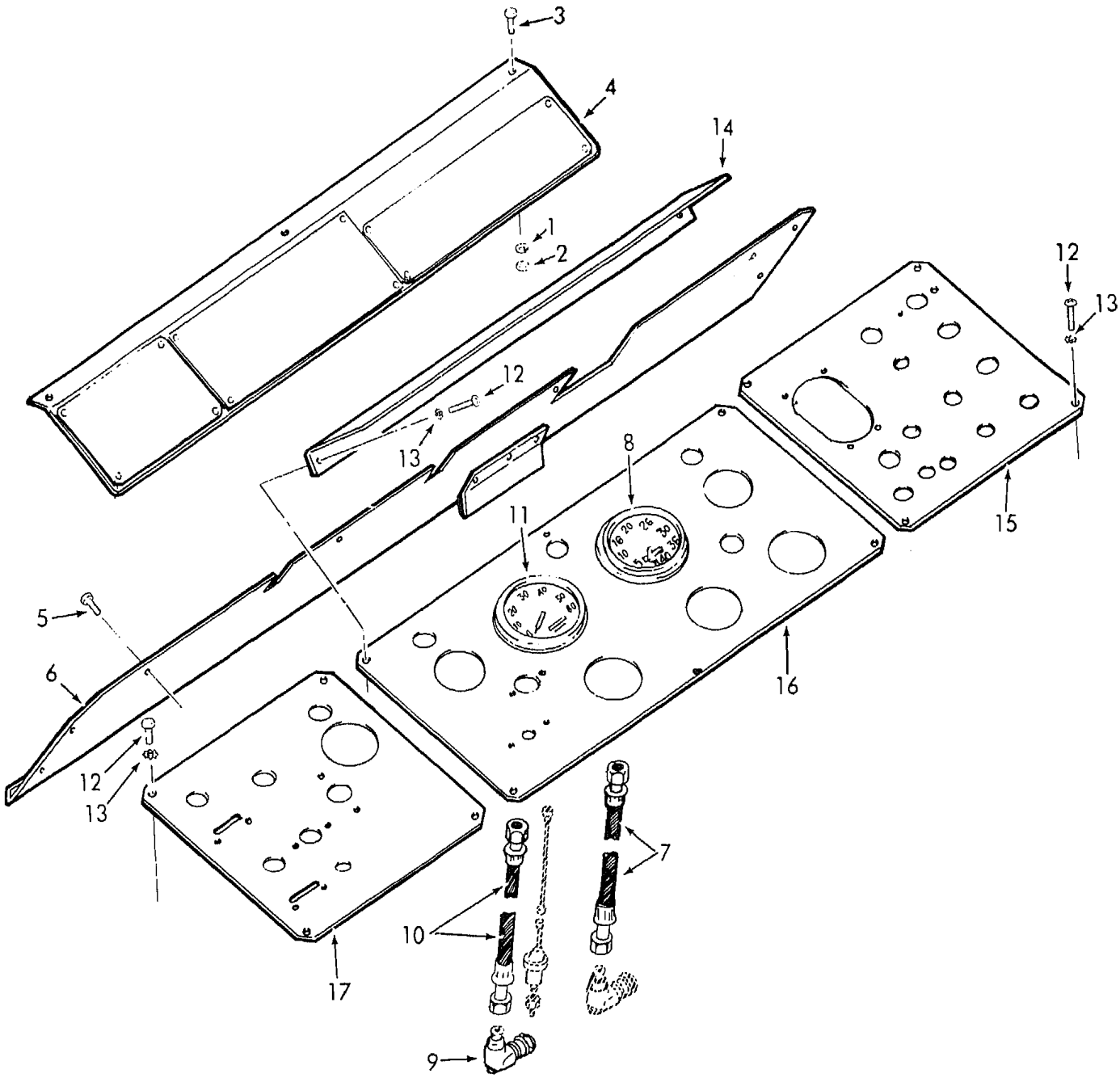

ME 3810-290-34P/124

Figure 124. Instrument Panels and Meters

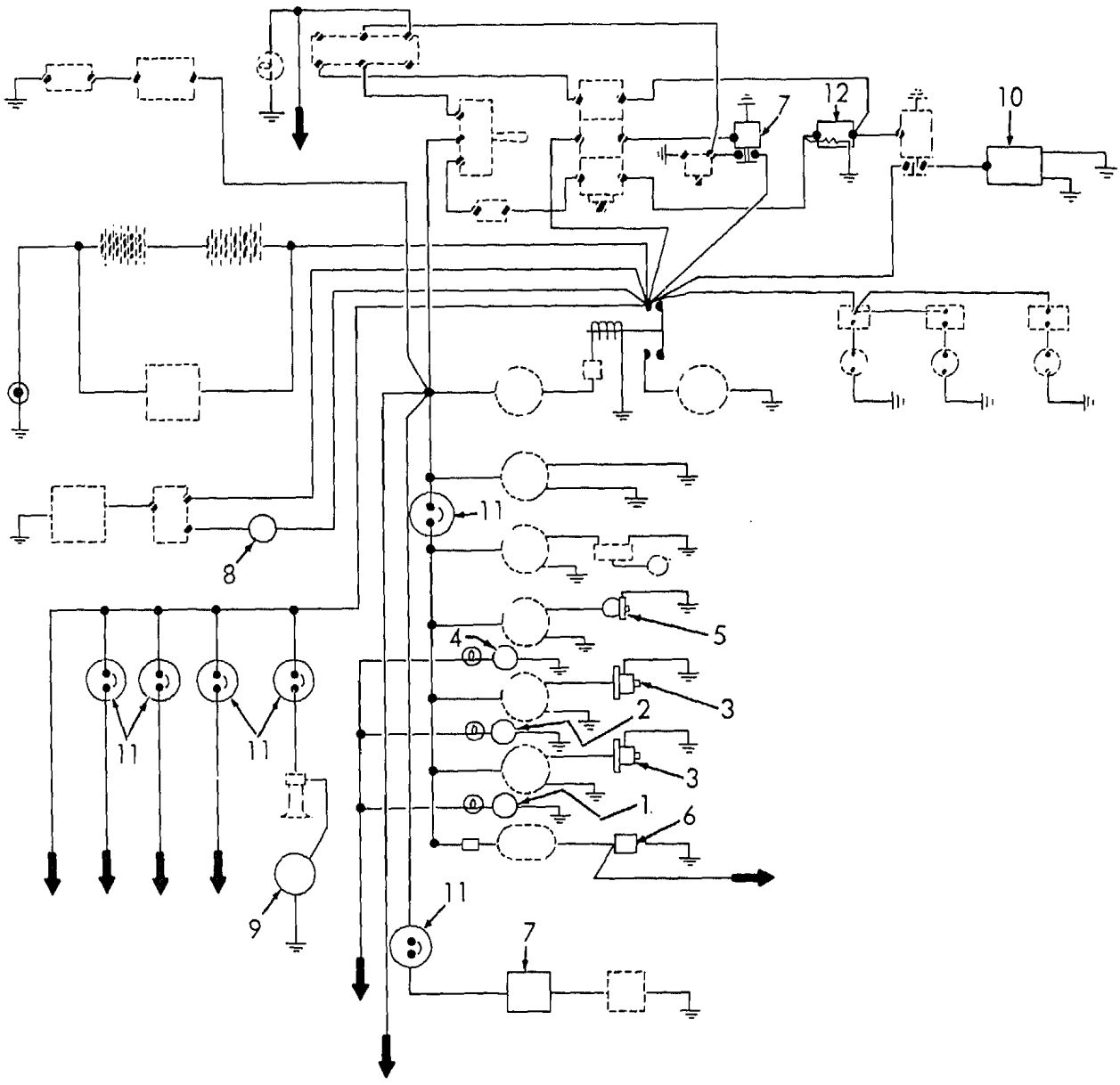

Figure 125. Sending Units, Valves and Relays

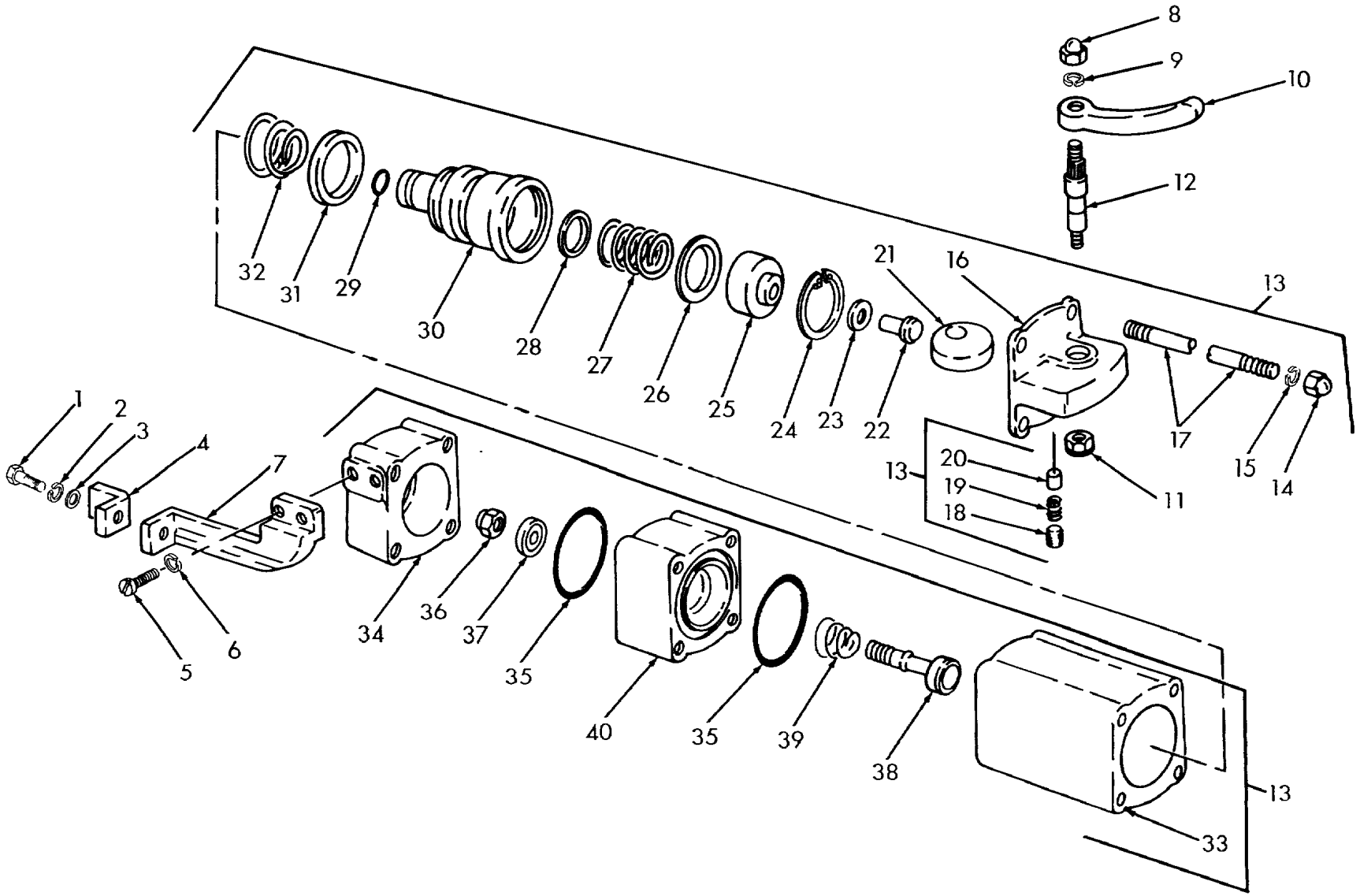

Figure 126. Trailer Brake Control

ME 3810-290-34P/126

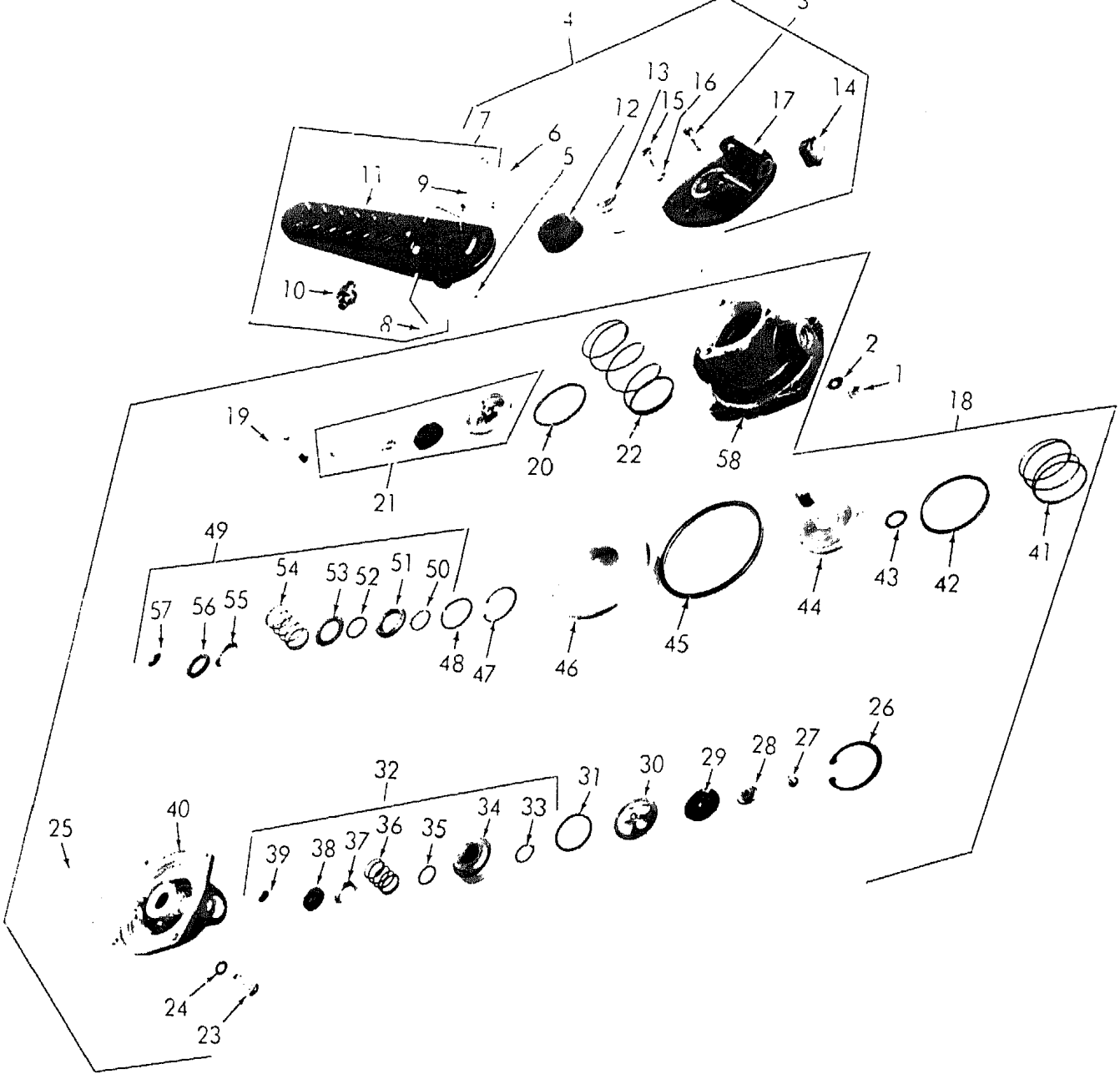

ME 5619 290 34P 127

Figure 127. Brake Control Valve

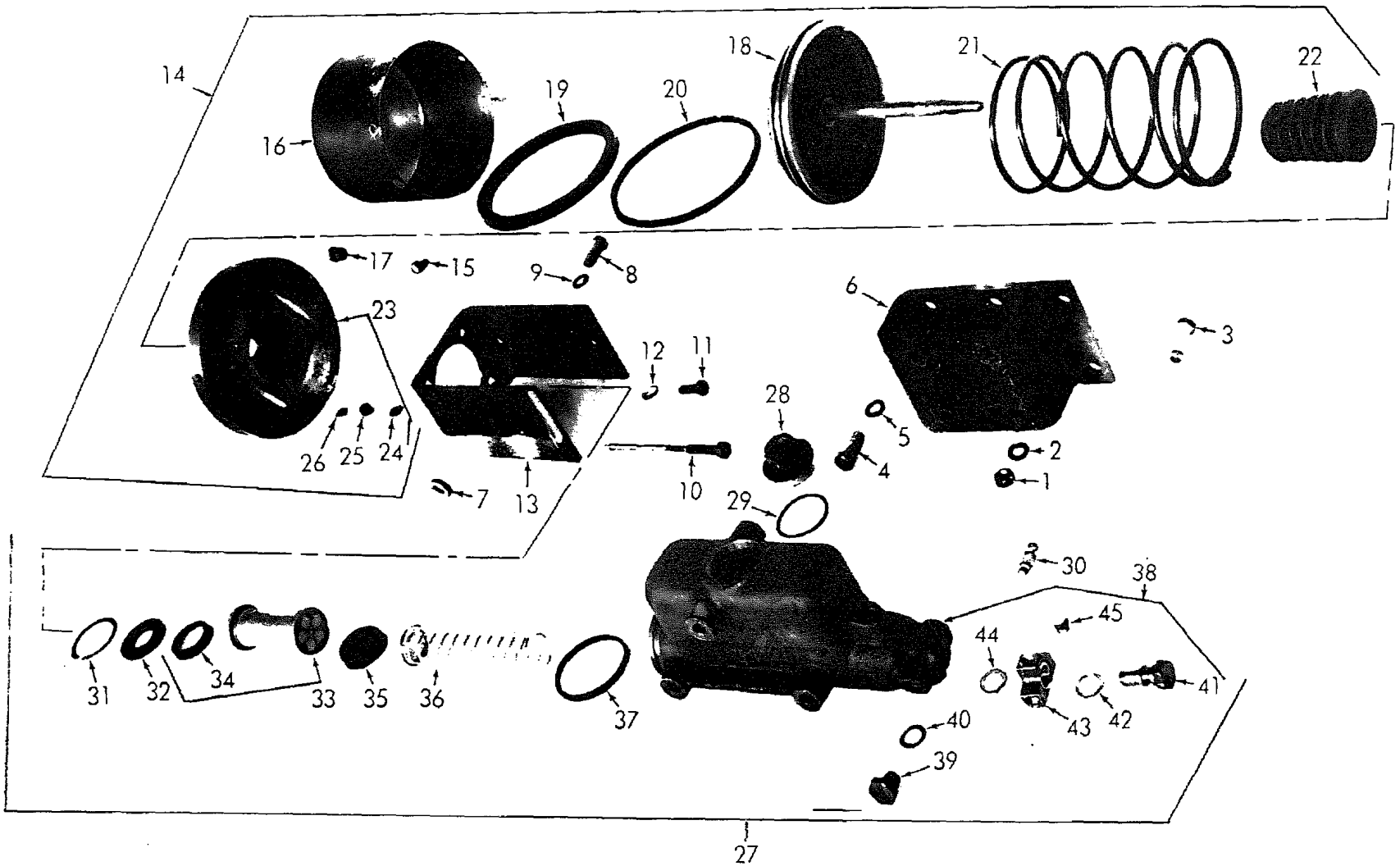

ME 3810-290-34P 128

Figure 128. Power Cluster Brake

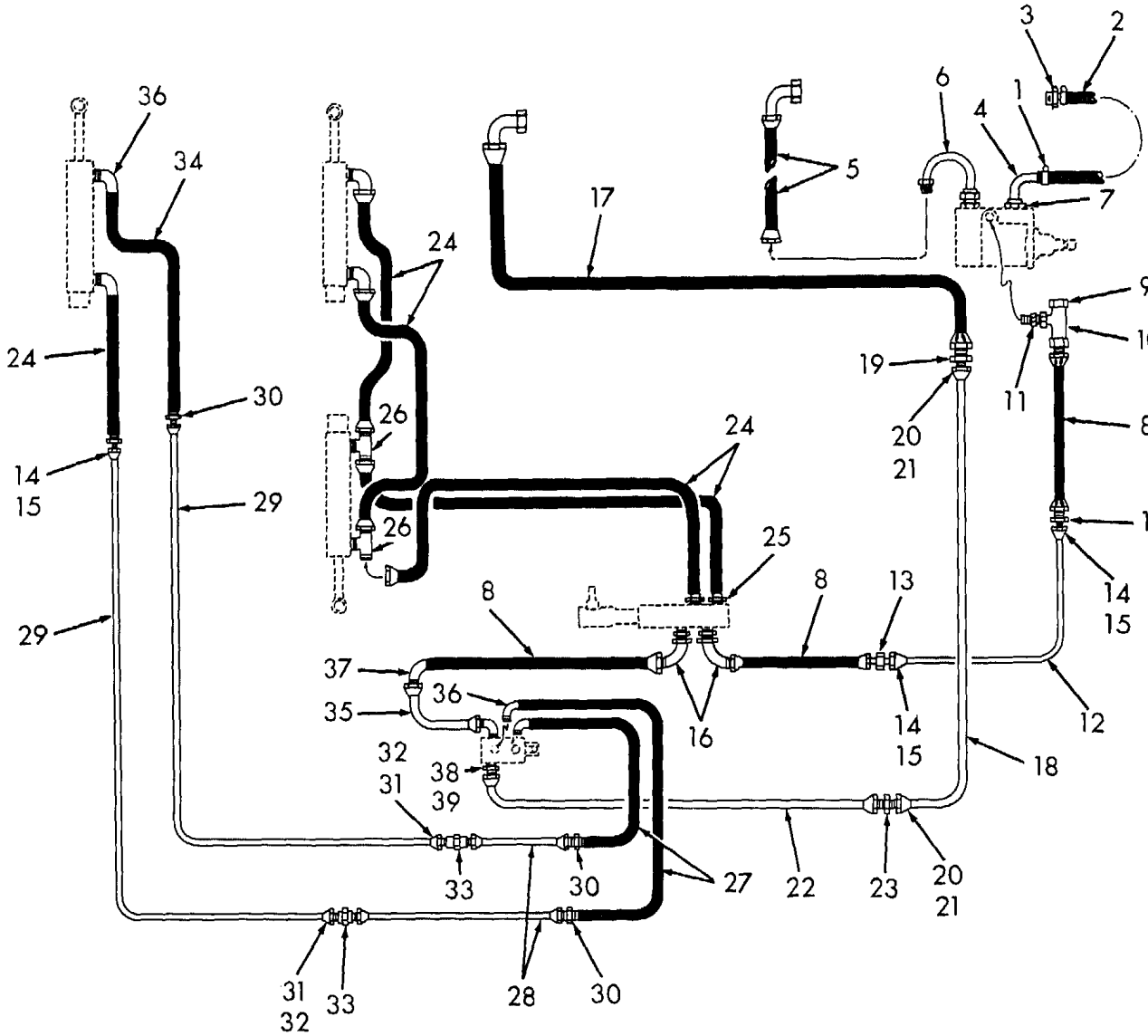

Figure 129. Steering Lines

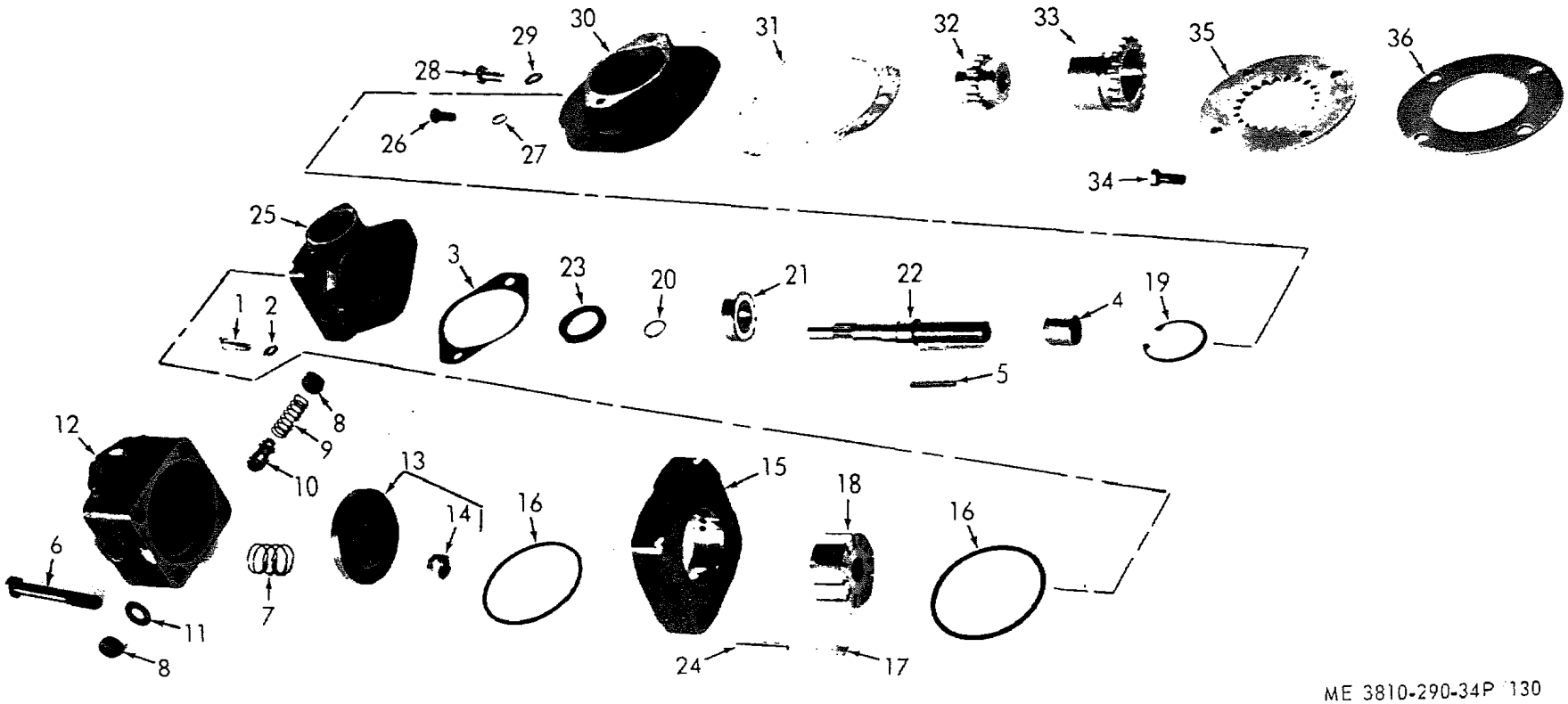

Figure 130. Steering Pump and Drive

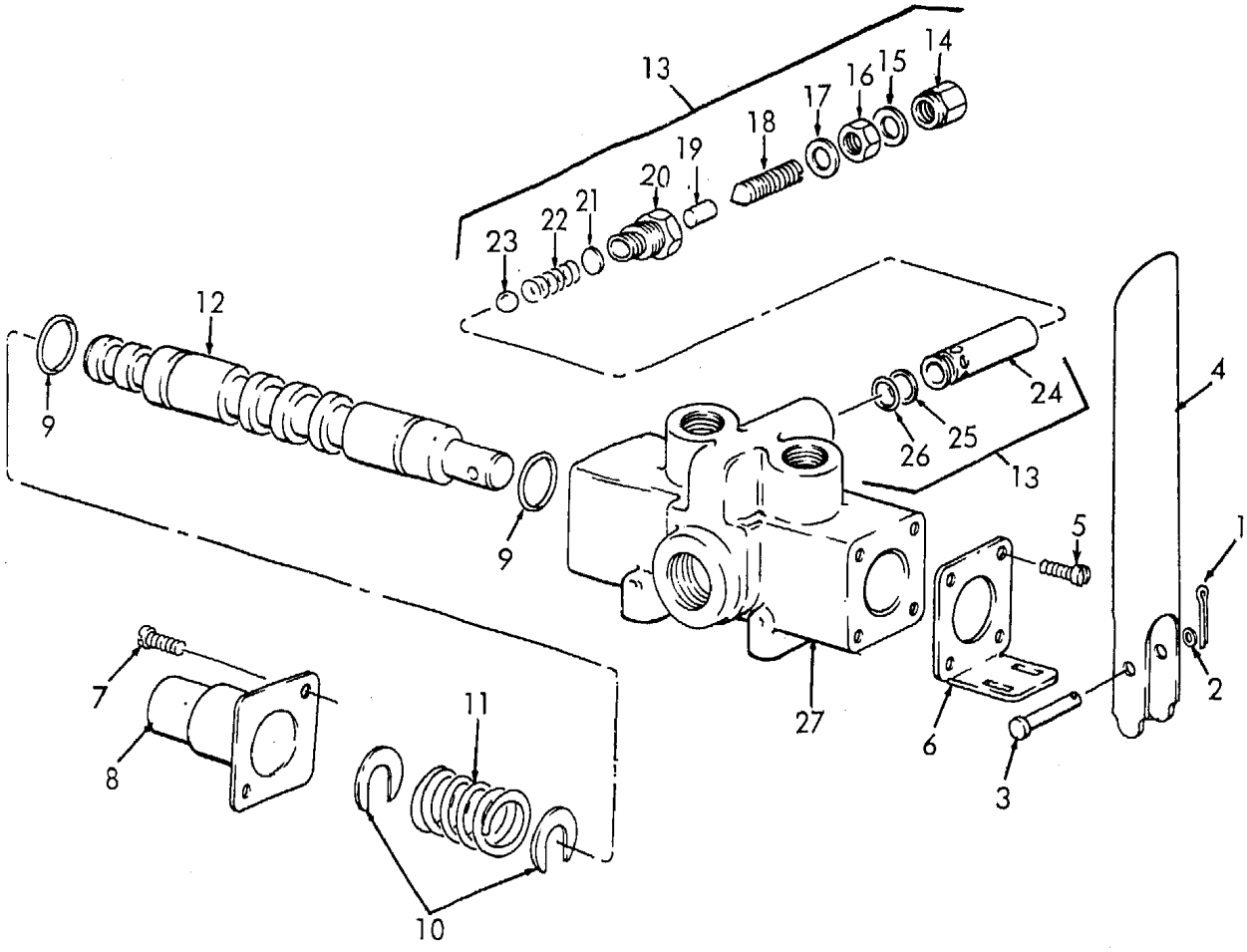

Figure 131. Control Valve, Rear Steer

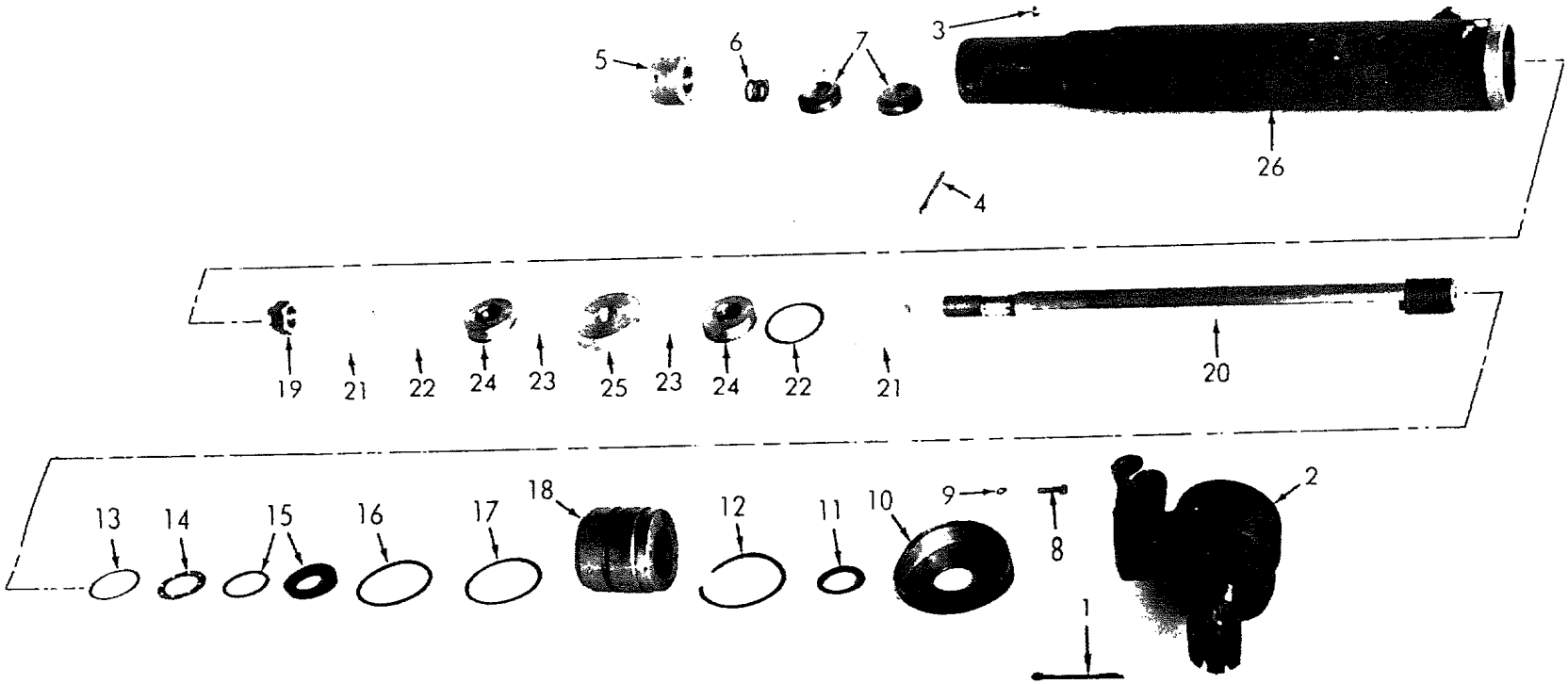

ME 3810-290-34P/132

Figure 132. Steer Cylinder, Front

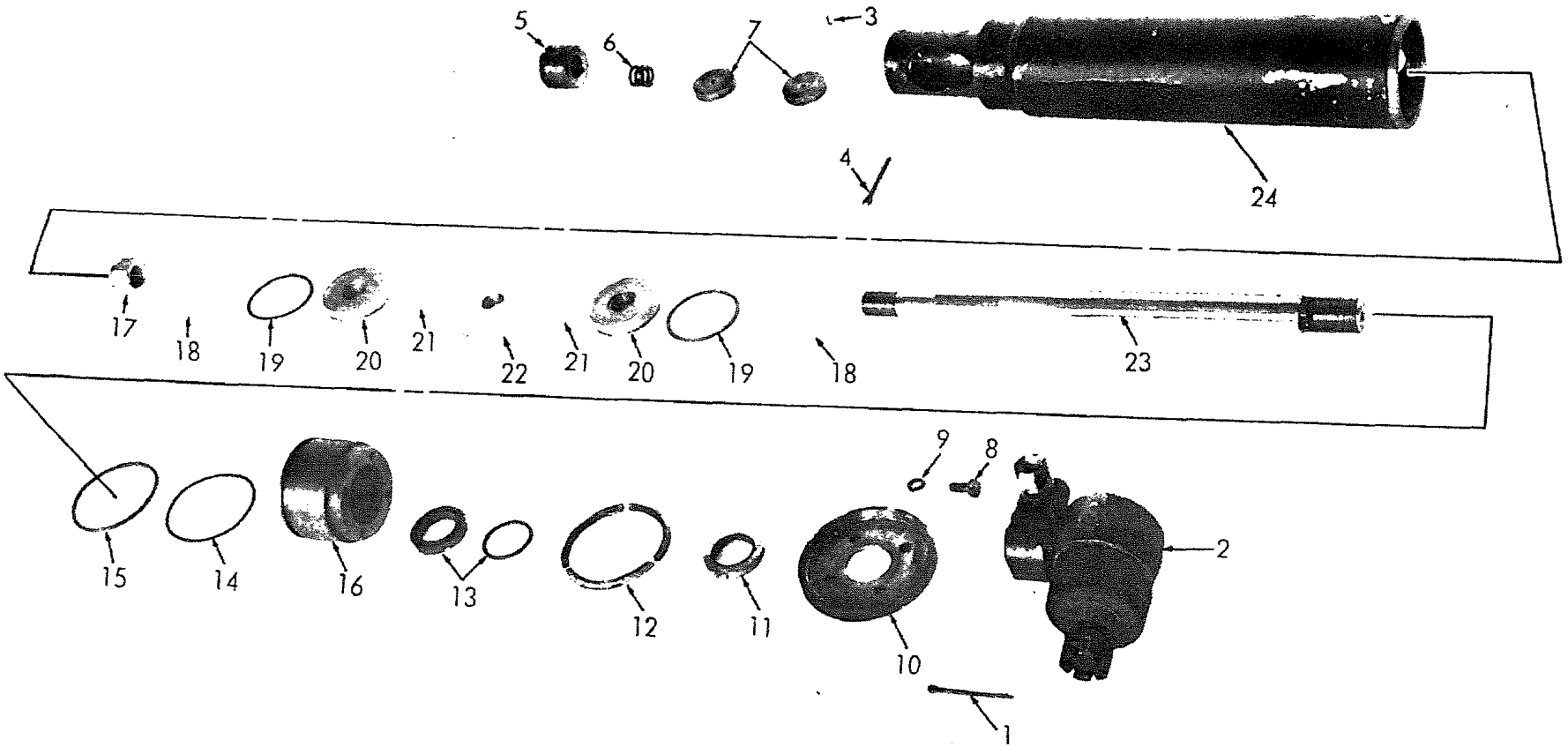

Figure 133. Steer Cylinder, Rear

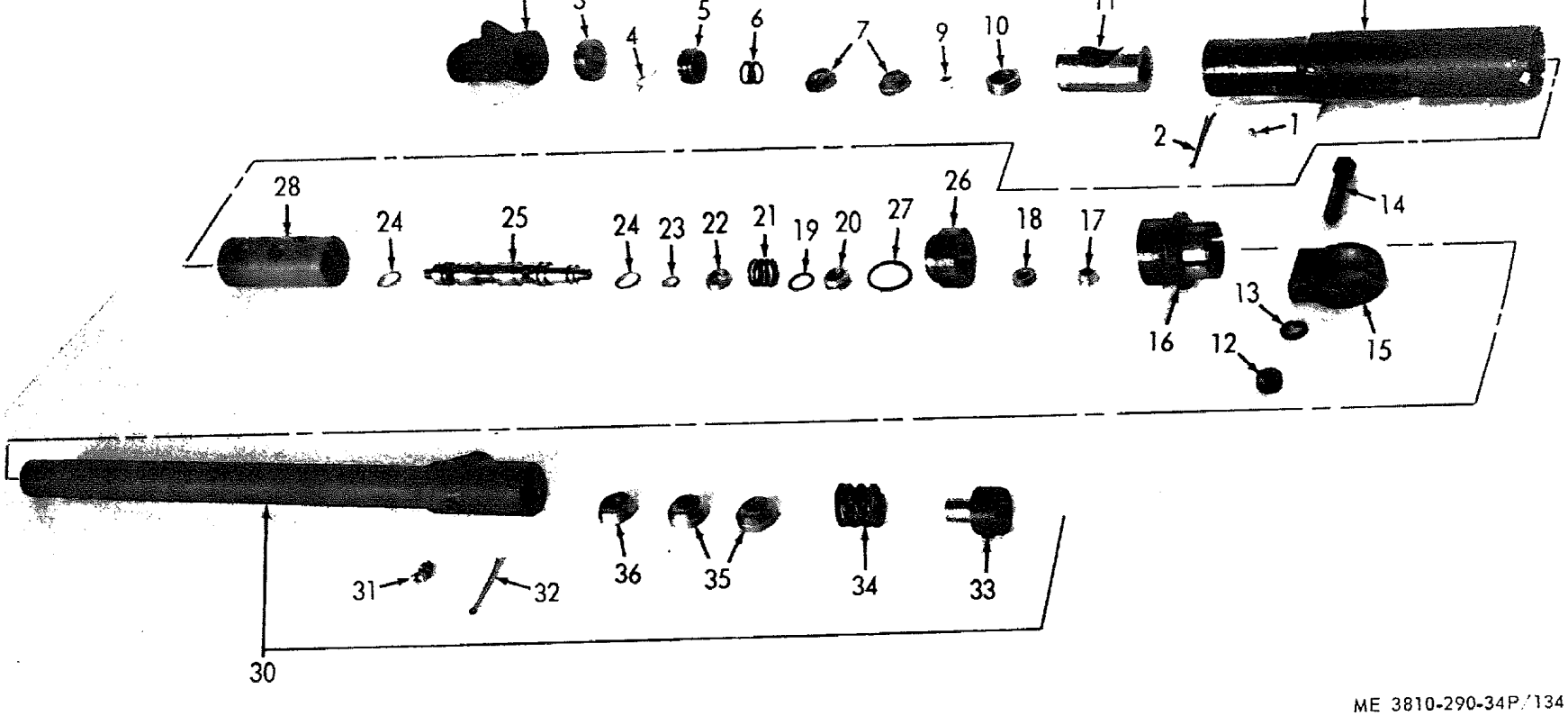

Figure 134. Steering Valve

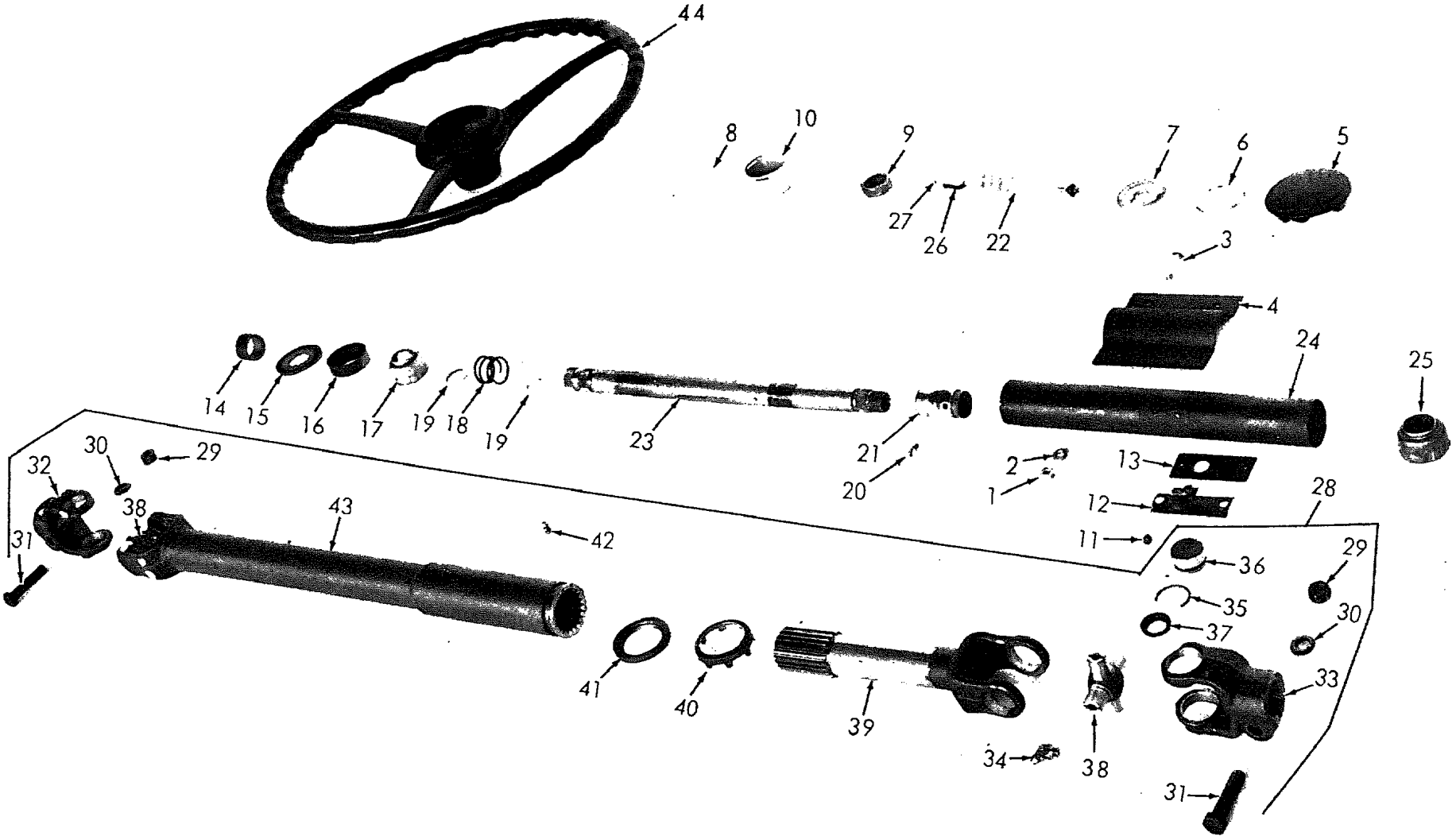

Figure 135. Steering Column

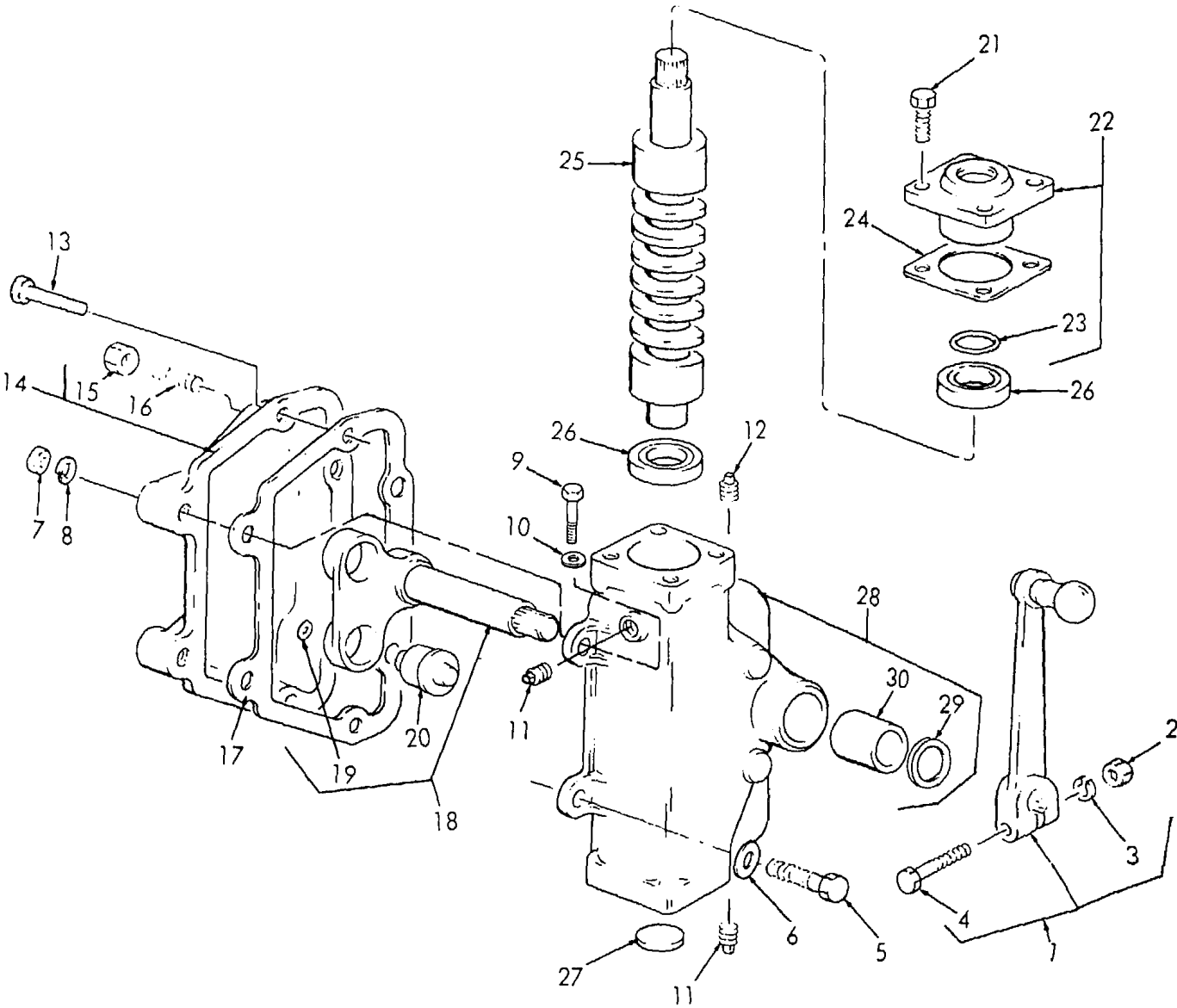

Figure 136. Steering Gear

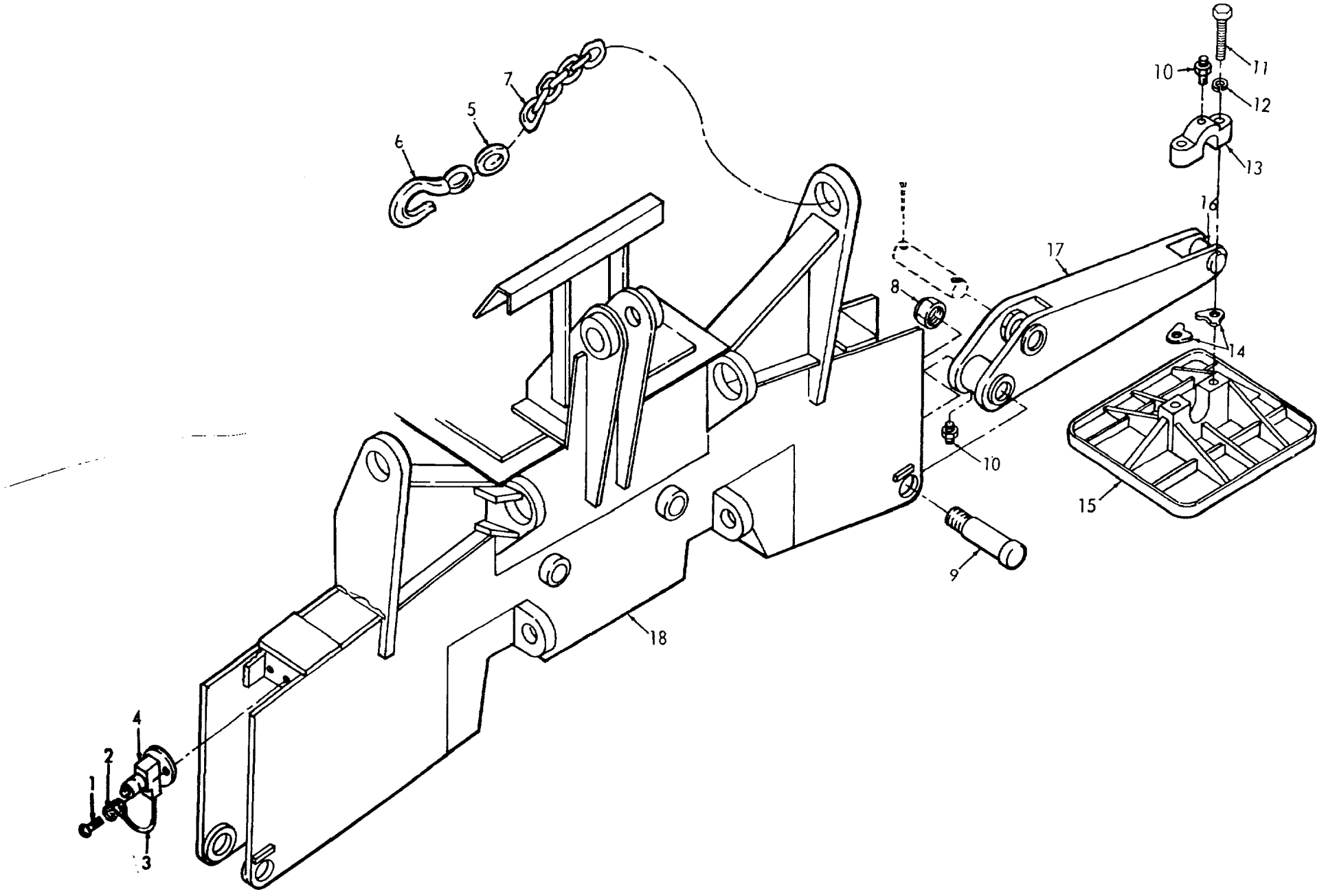

Figure 137. Front Outriggers

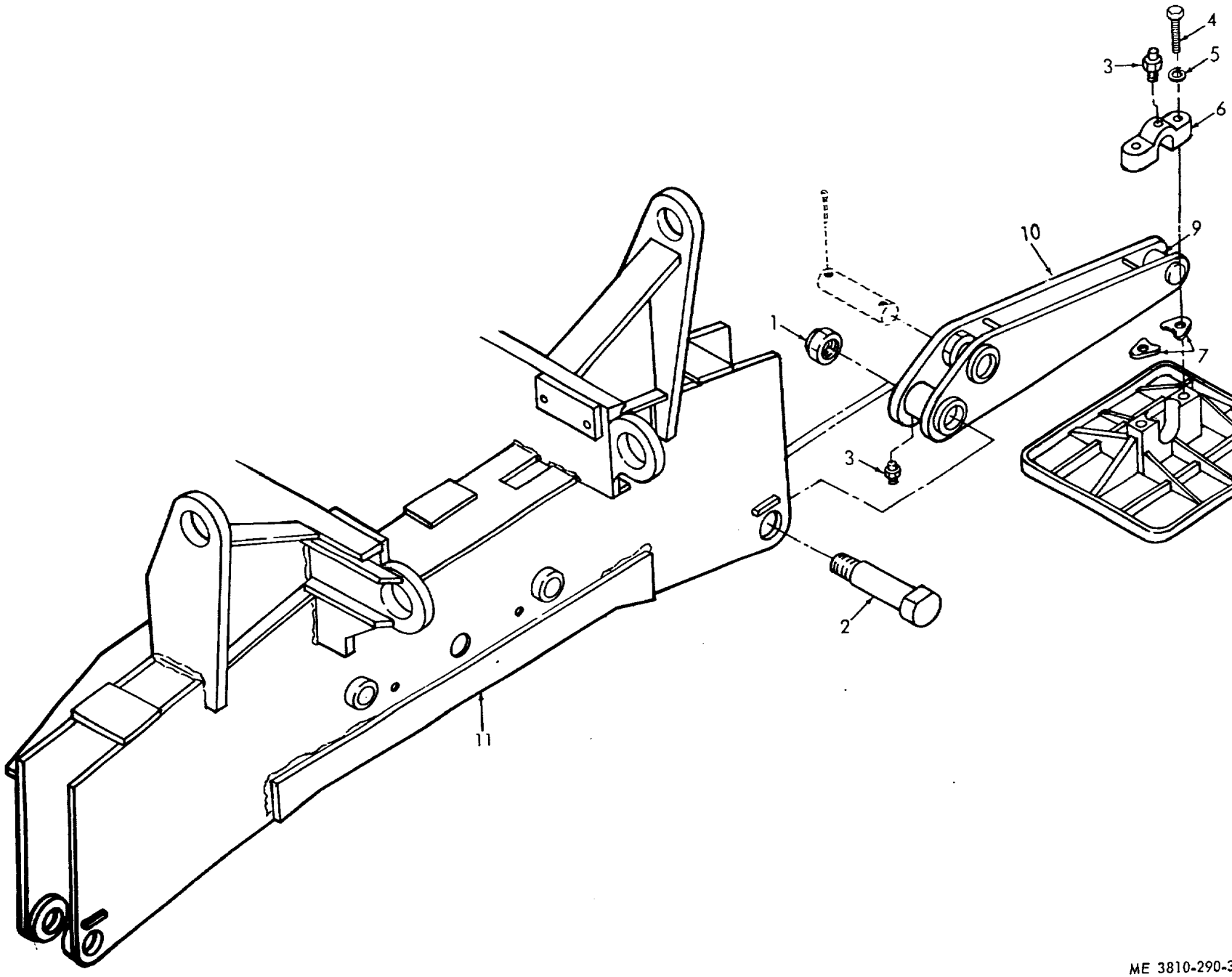

ME 3810-290-3

Figure 138. Rear Outriggers

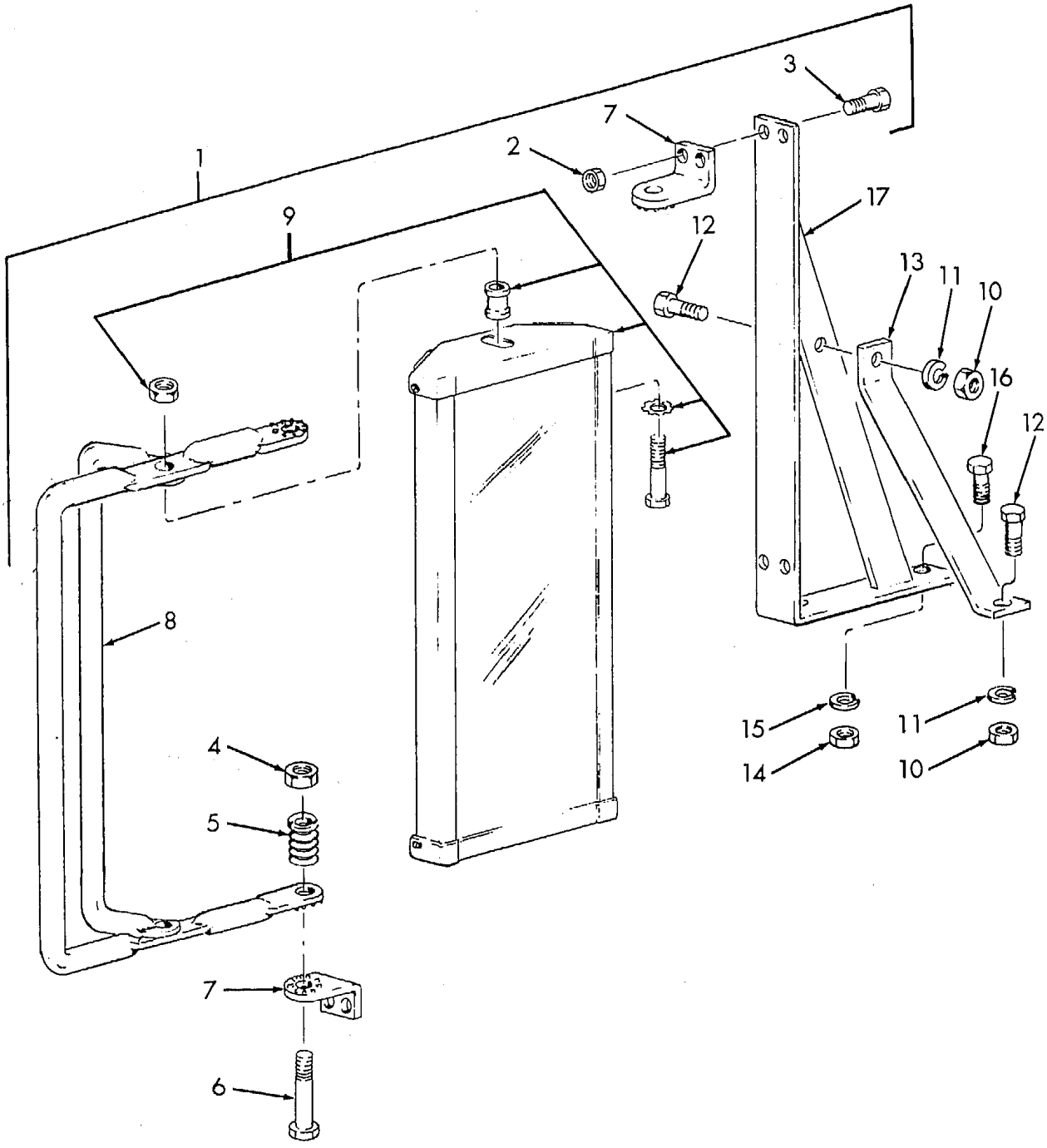

Figure 139. Mirror

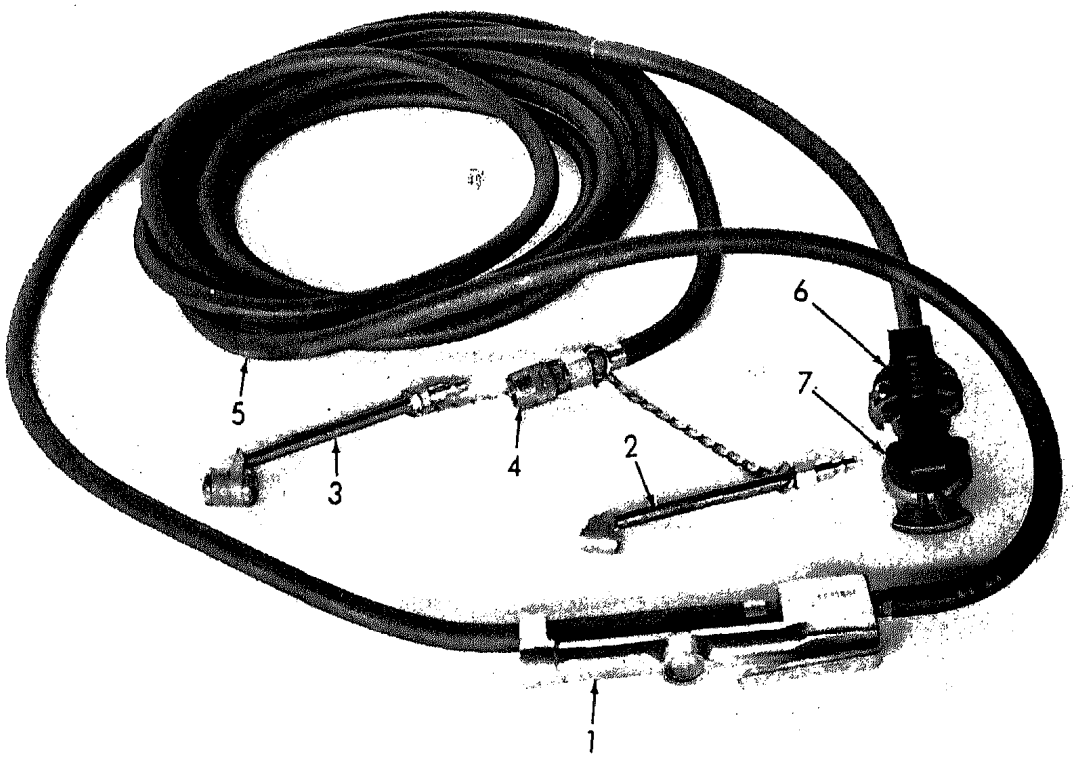

Figure 140. Tire Inflator

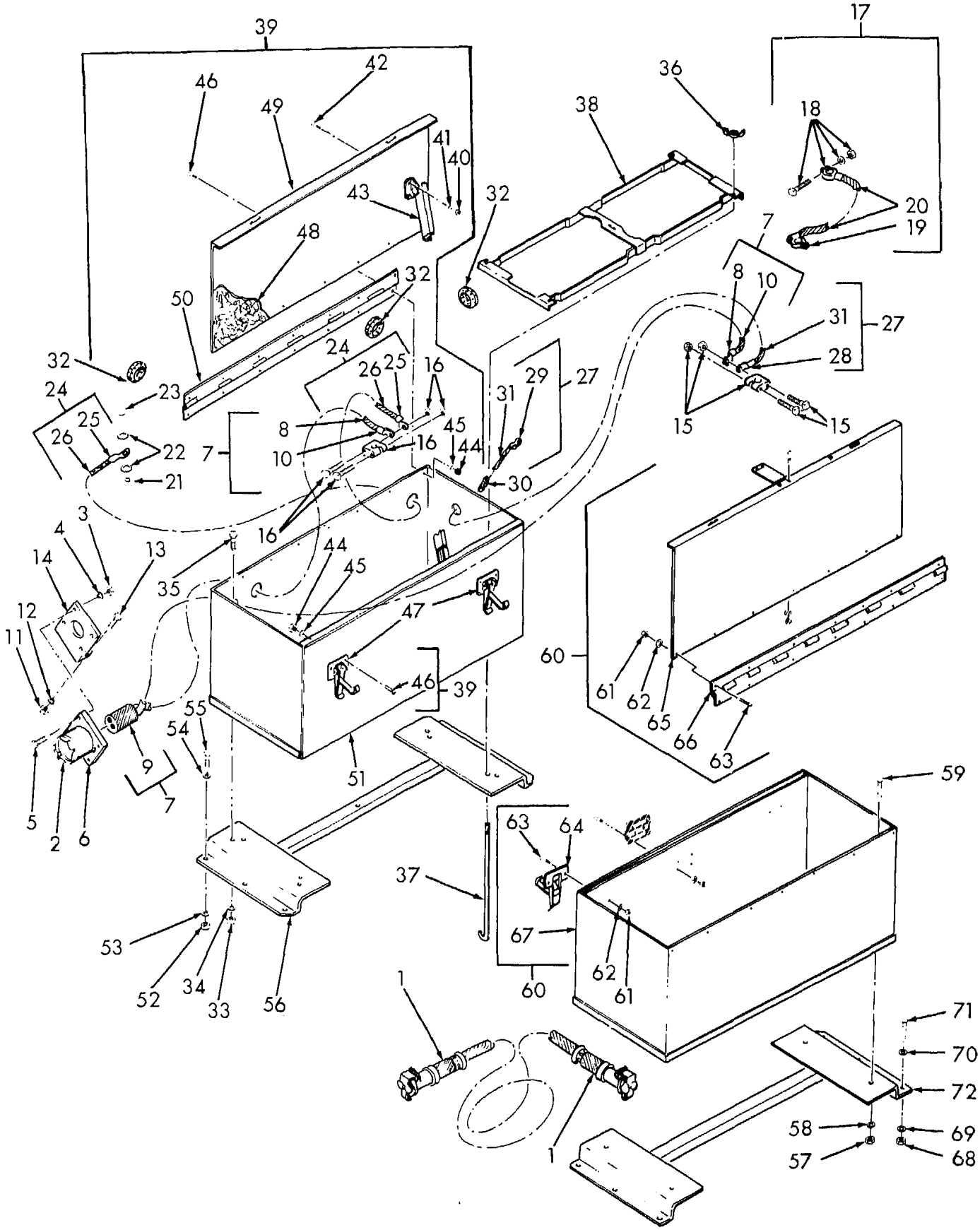

Figure 141. Battery Box and Tool Box

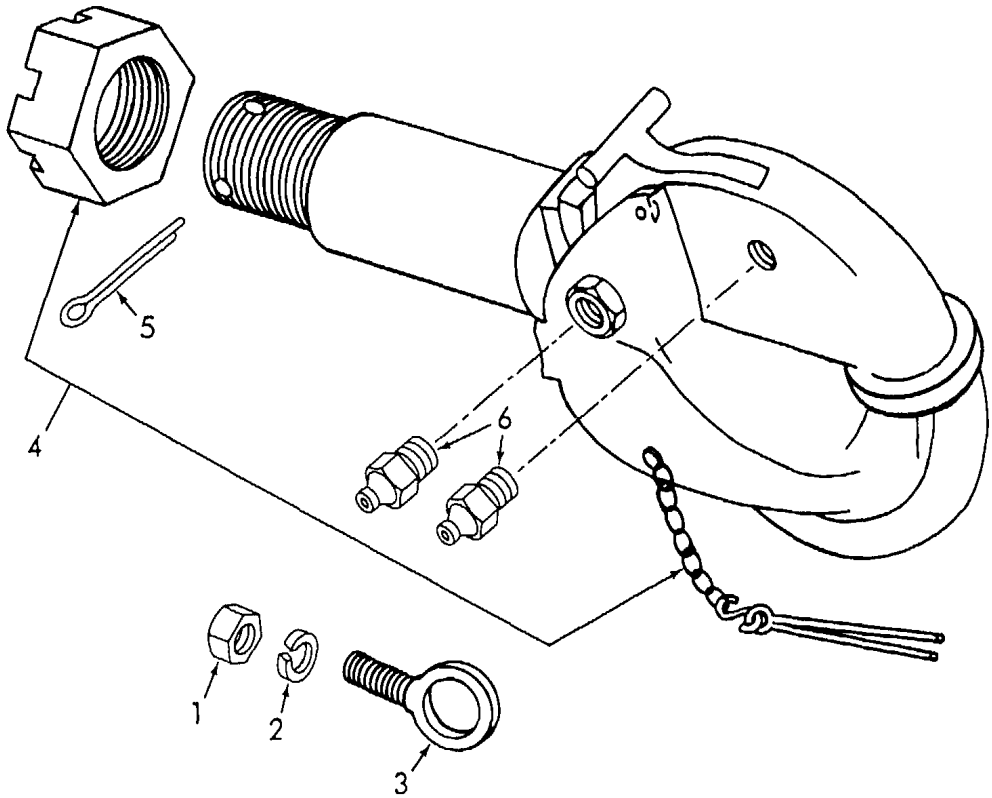

ME 3810-290-34P/142

Figure 142. Pintle and Eye Bolt

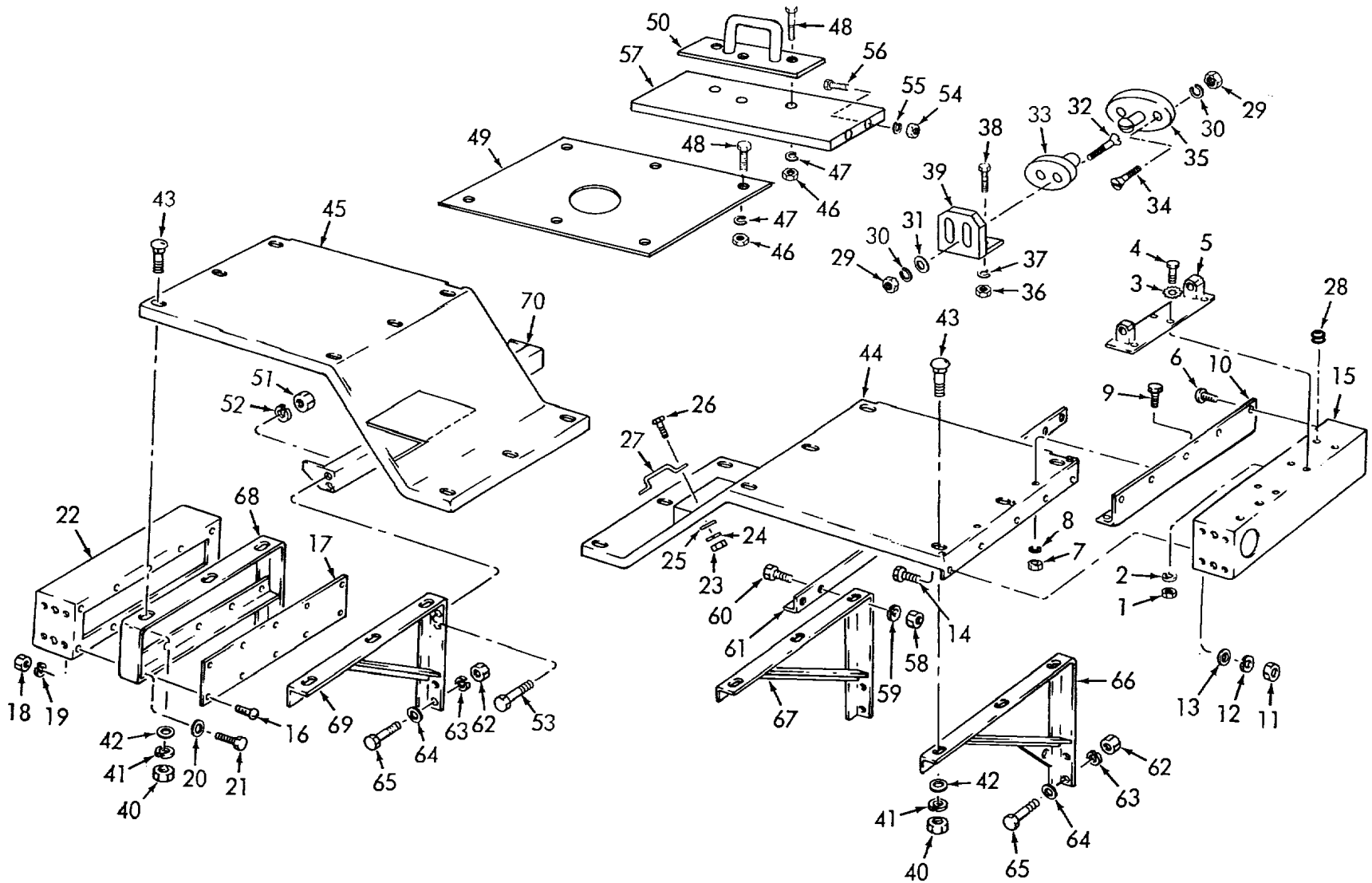

ME 3810-290-34P/143

Figure 143. Fenders, Brackets and Light Boxes

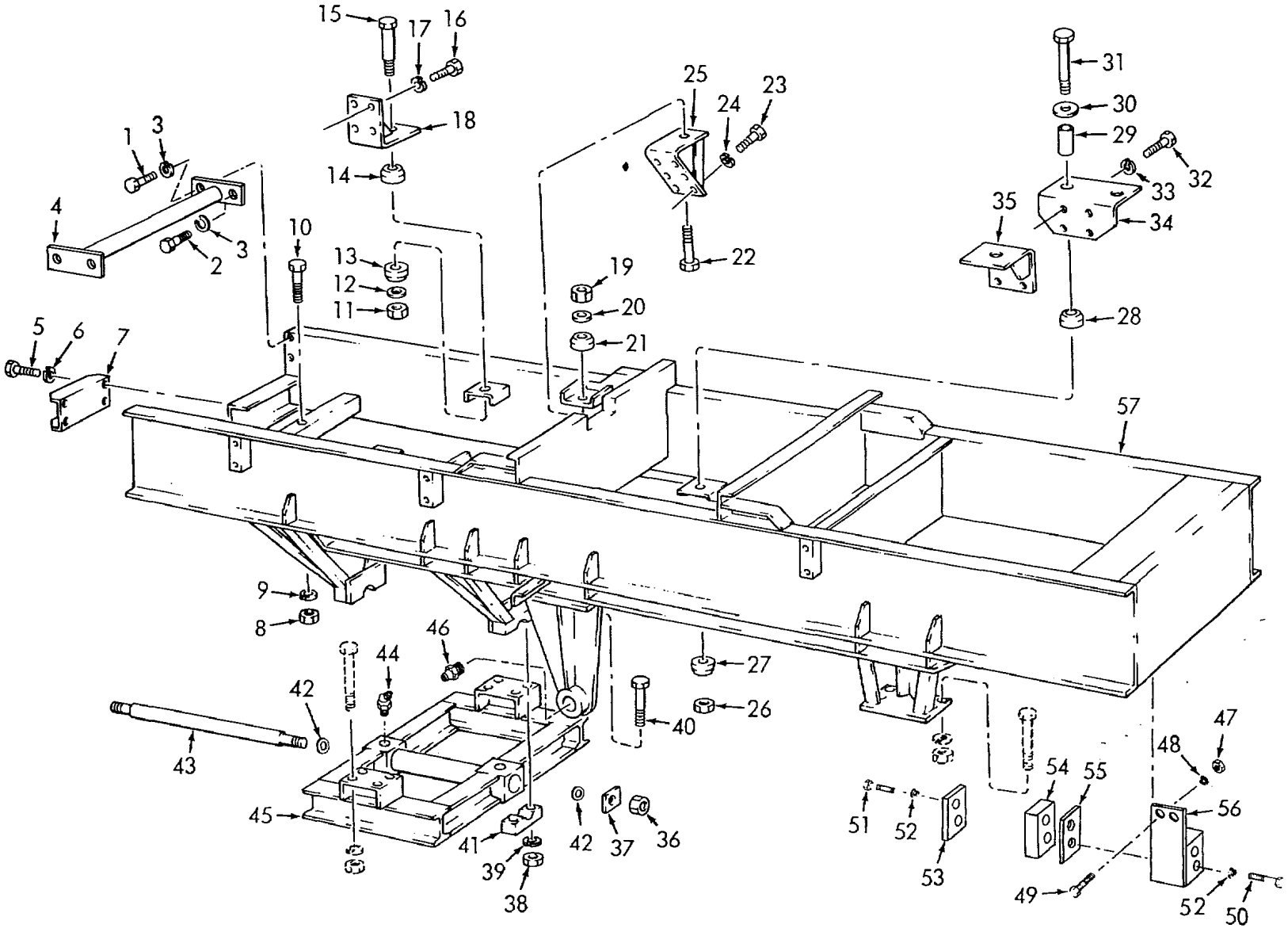

ME 3810-290-34P/144

Figure 144. Frame and Brackets

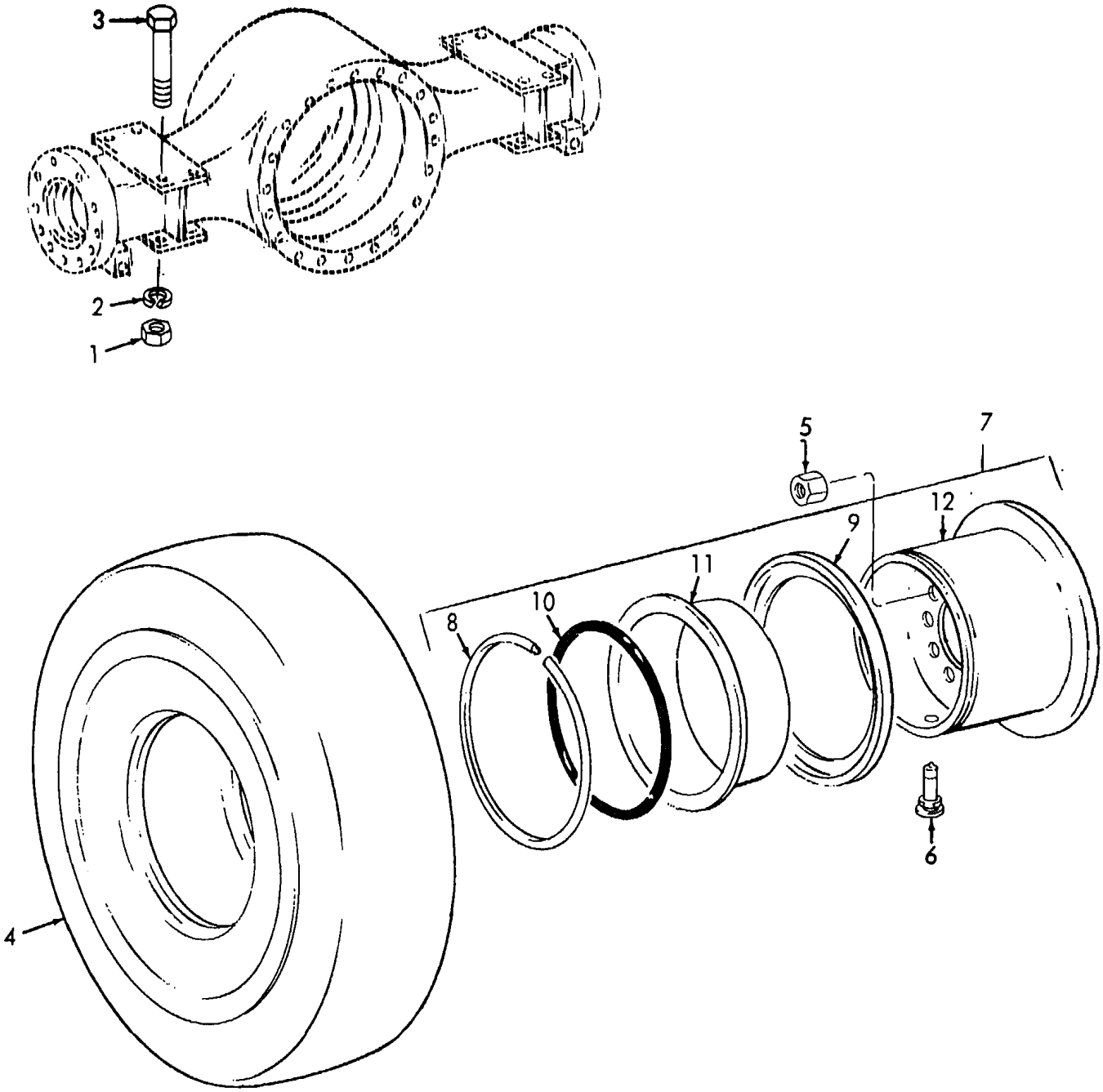

Figure 145. Front Wheel and Tire

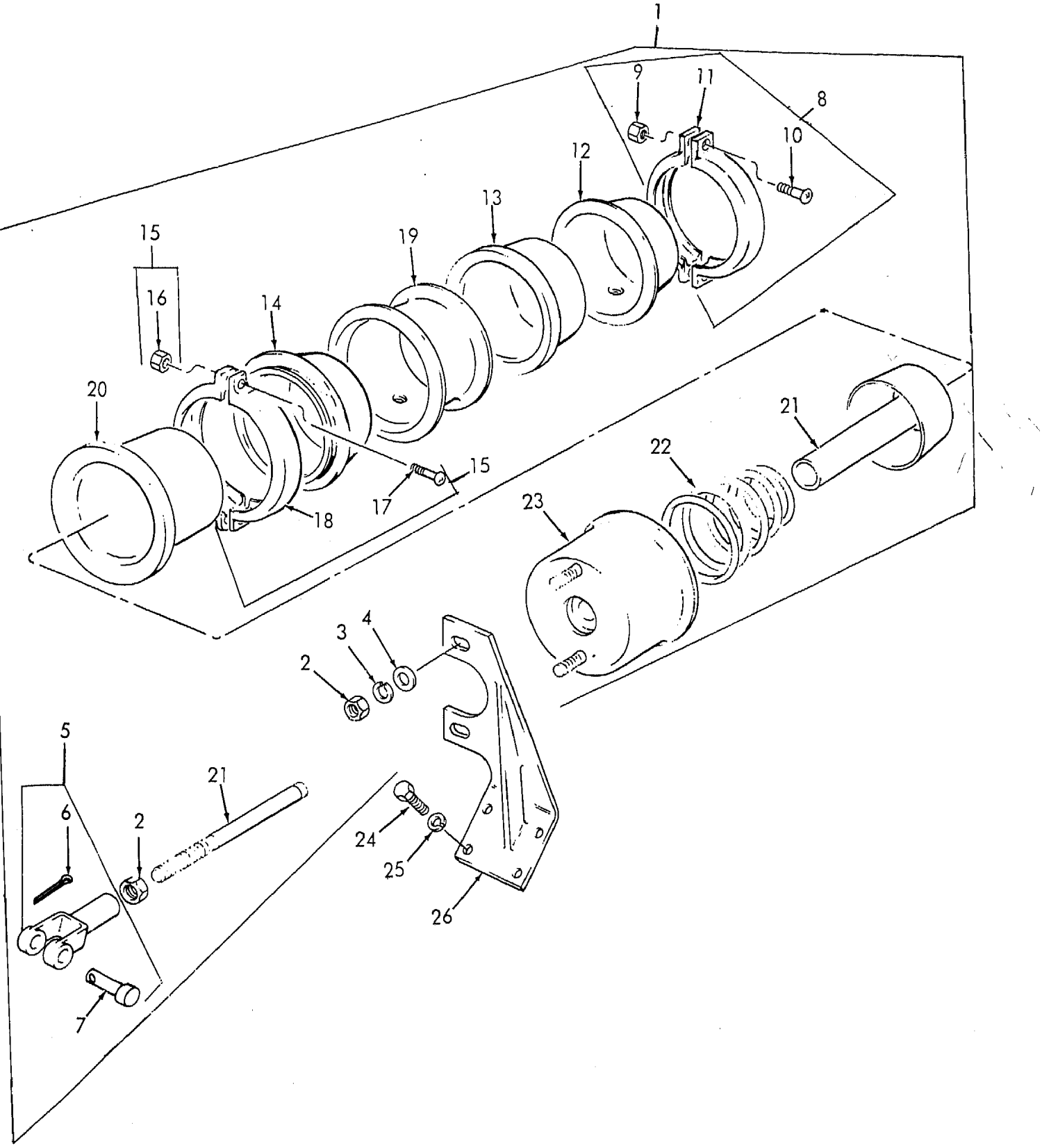

Figure 146. Brake Actuator

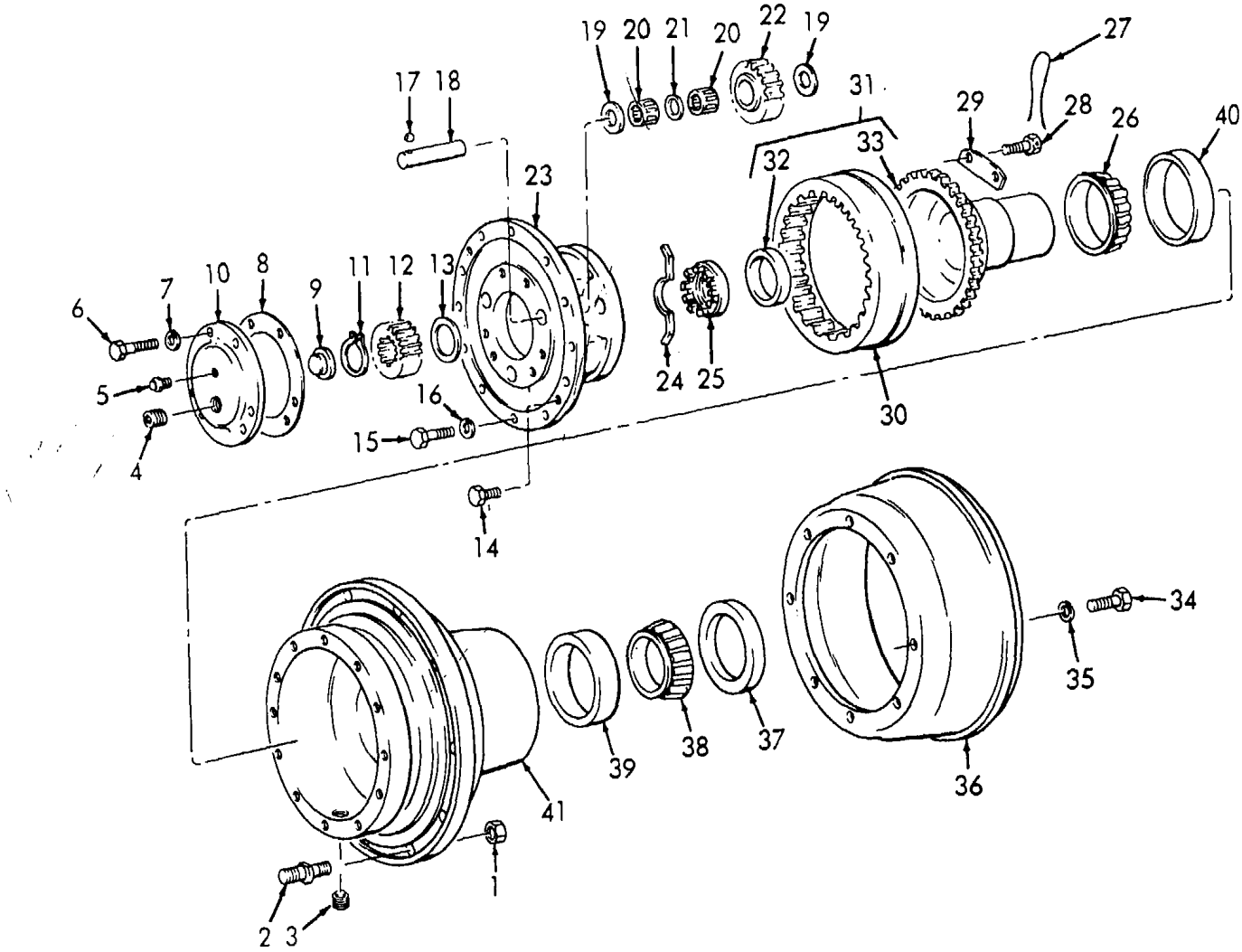

ME 3810-290-34P/147

Figure 147. Planetary Gear

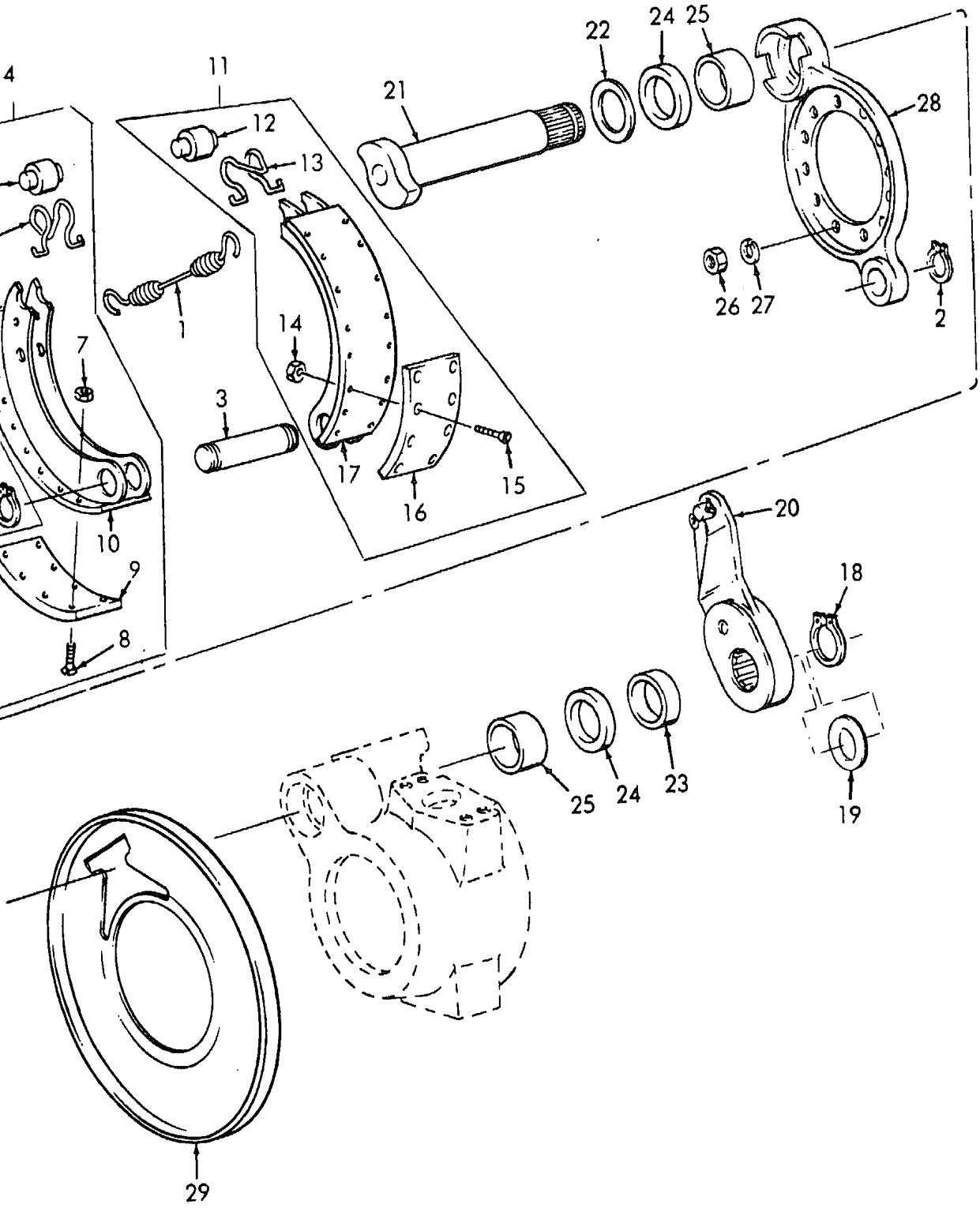

ME 3810-290-34P/148

Figure 148. Brake Components

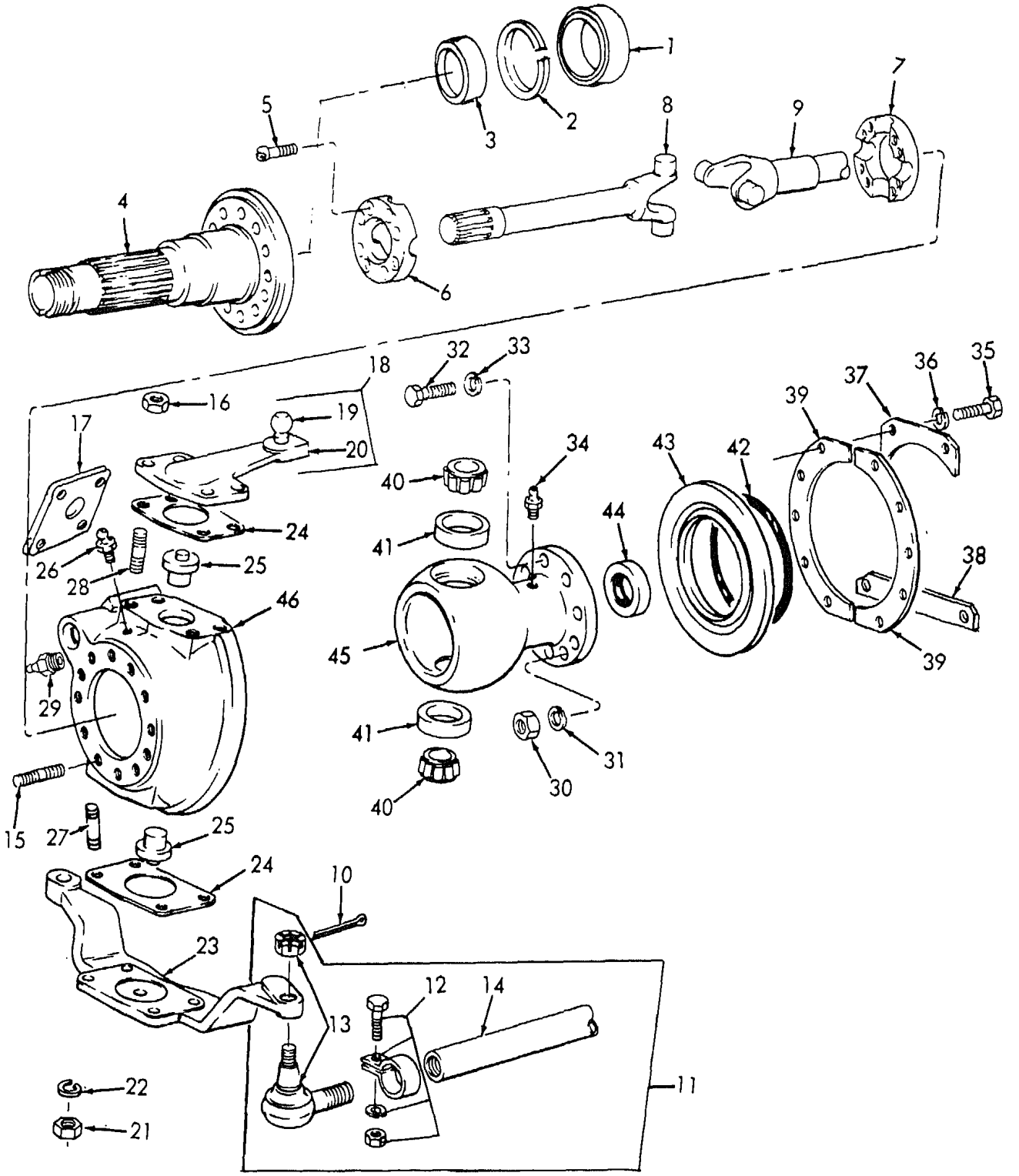

Figure 149. Ball and Socket

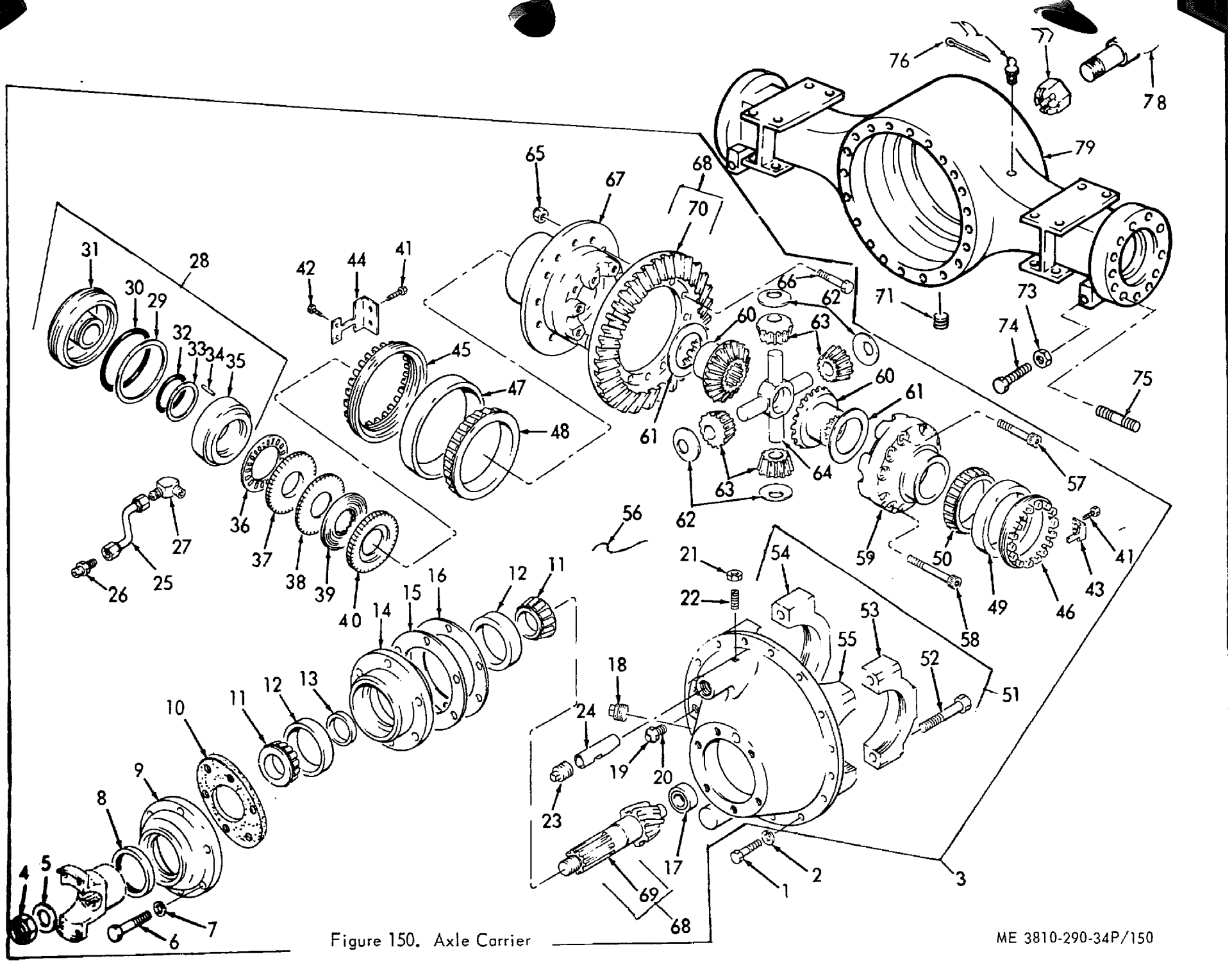

Figure 150. Axle Carrier

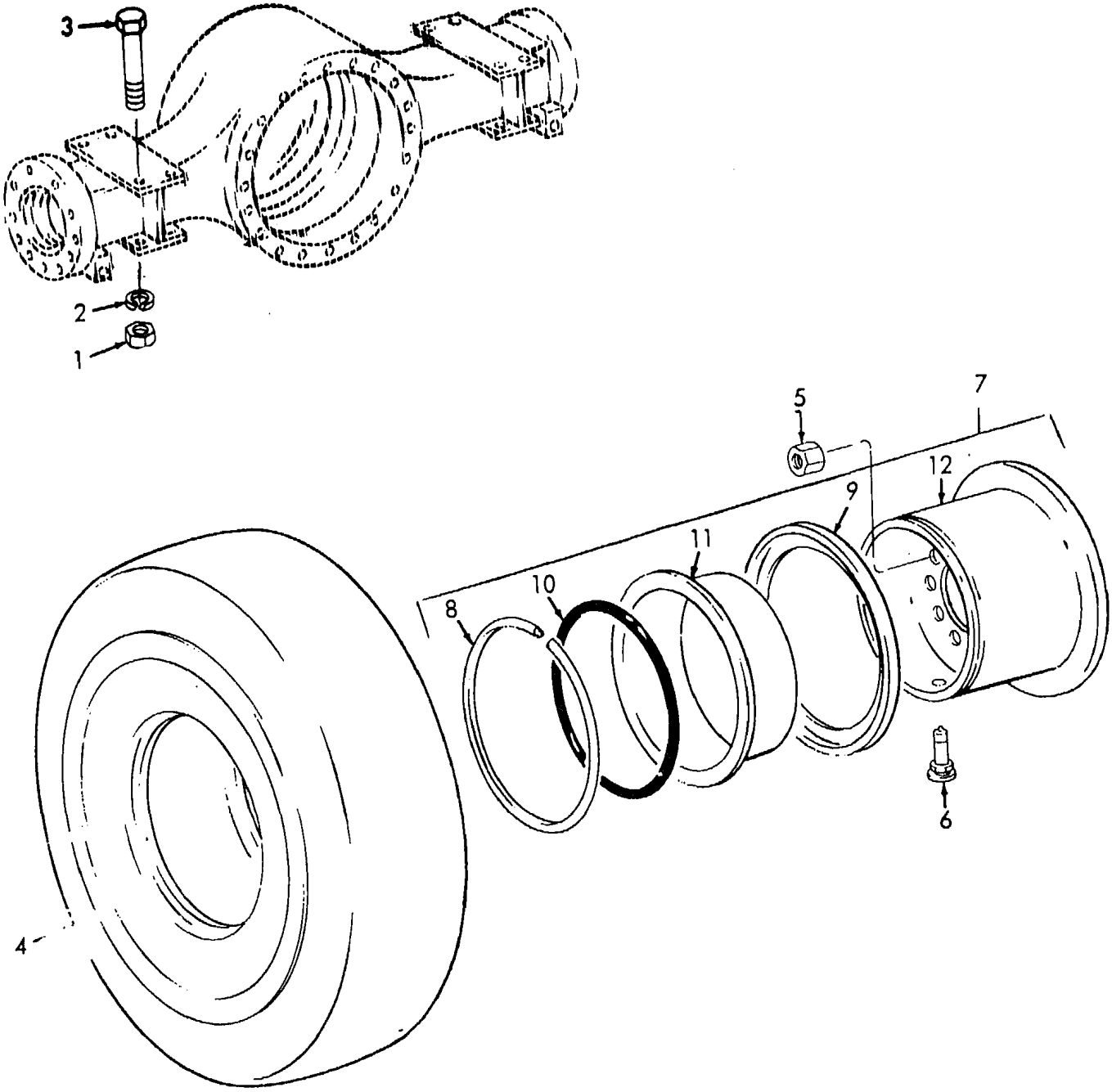

ME 3810-290-34P/151

Figure 151. Rear Wheel and Tire

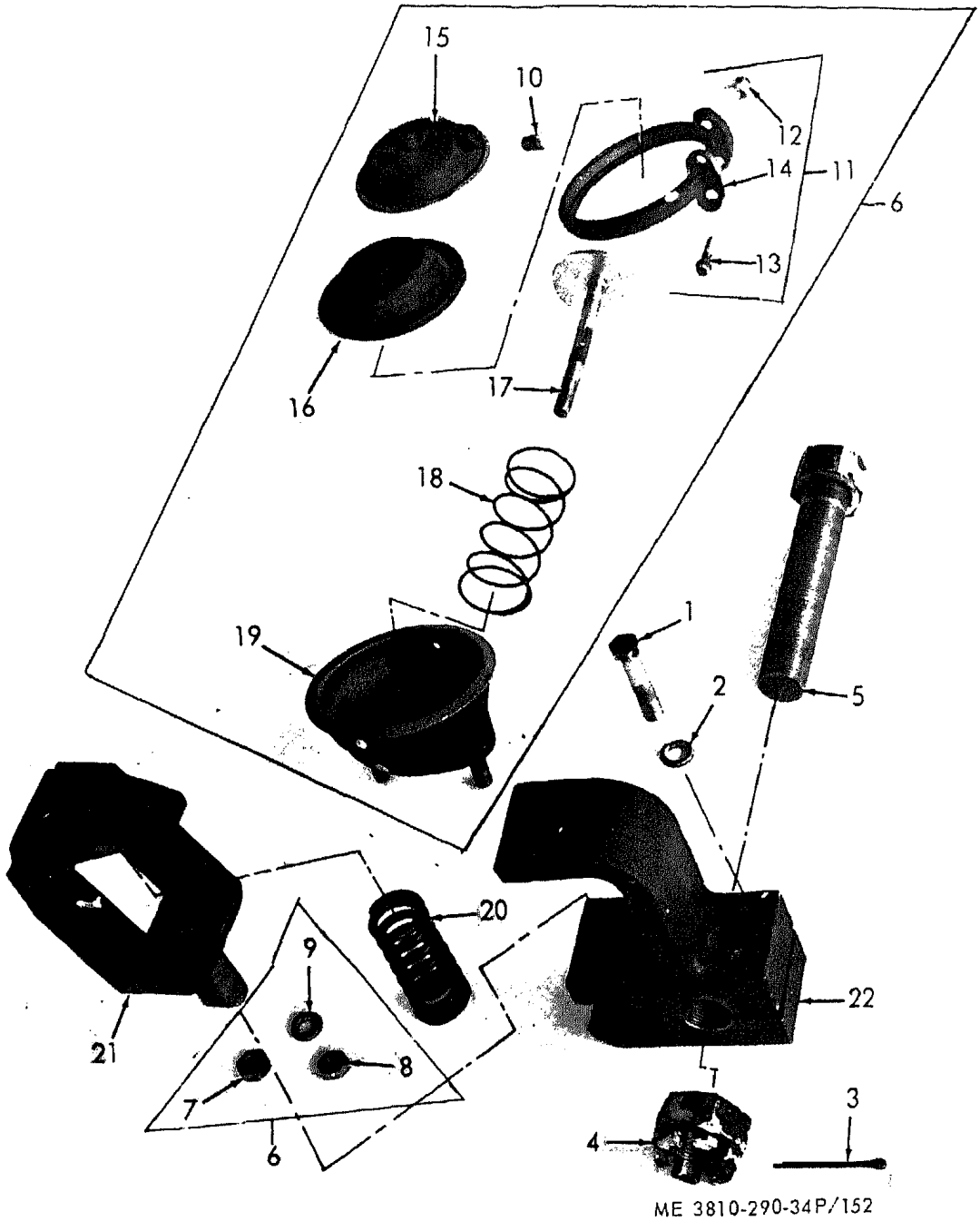

Figure 152. Steer Lock

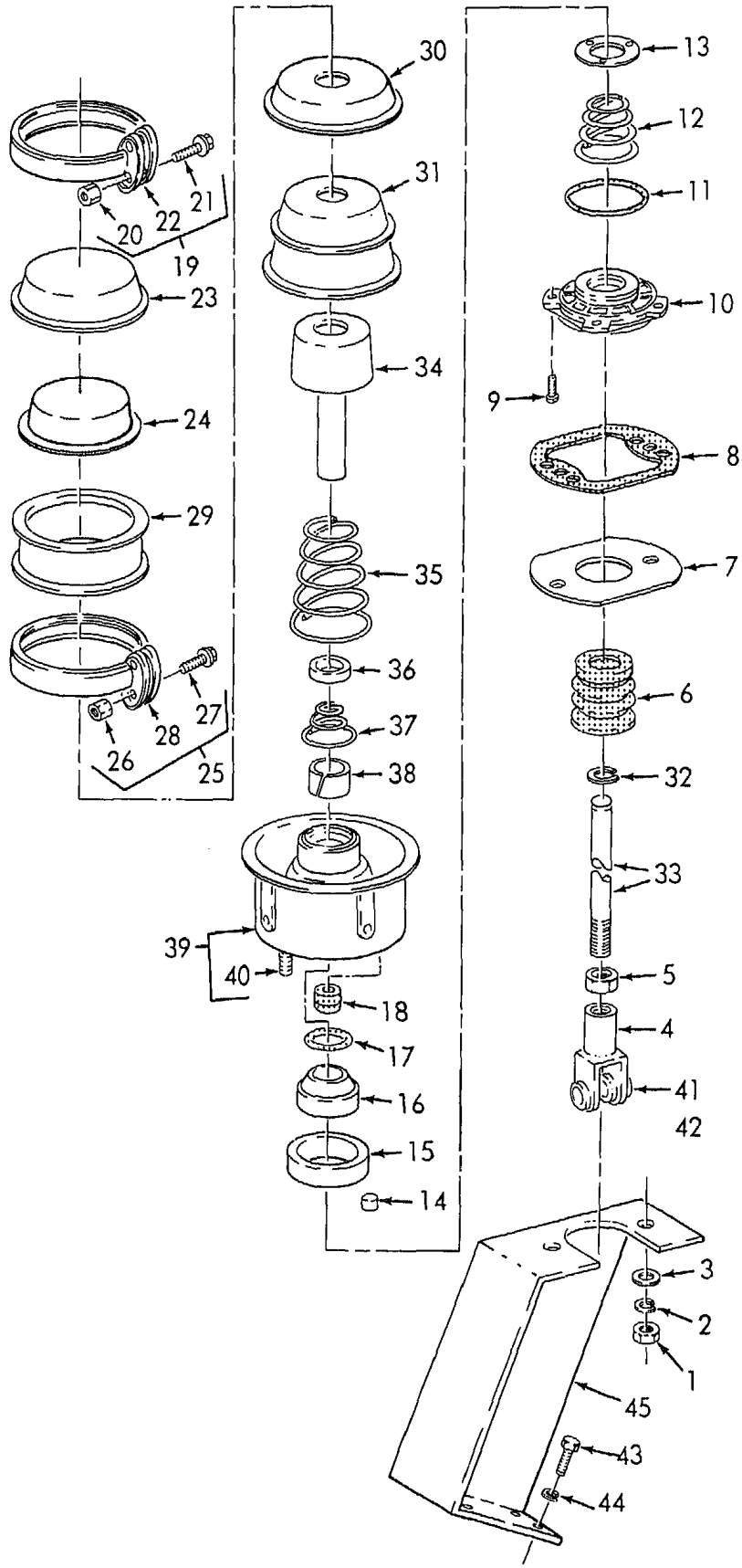

Figure 153. Brake Actuator

ME 3810-290-34P/153

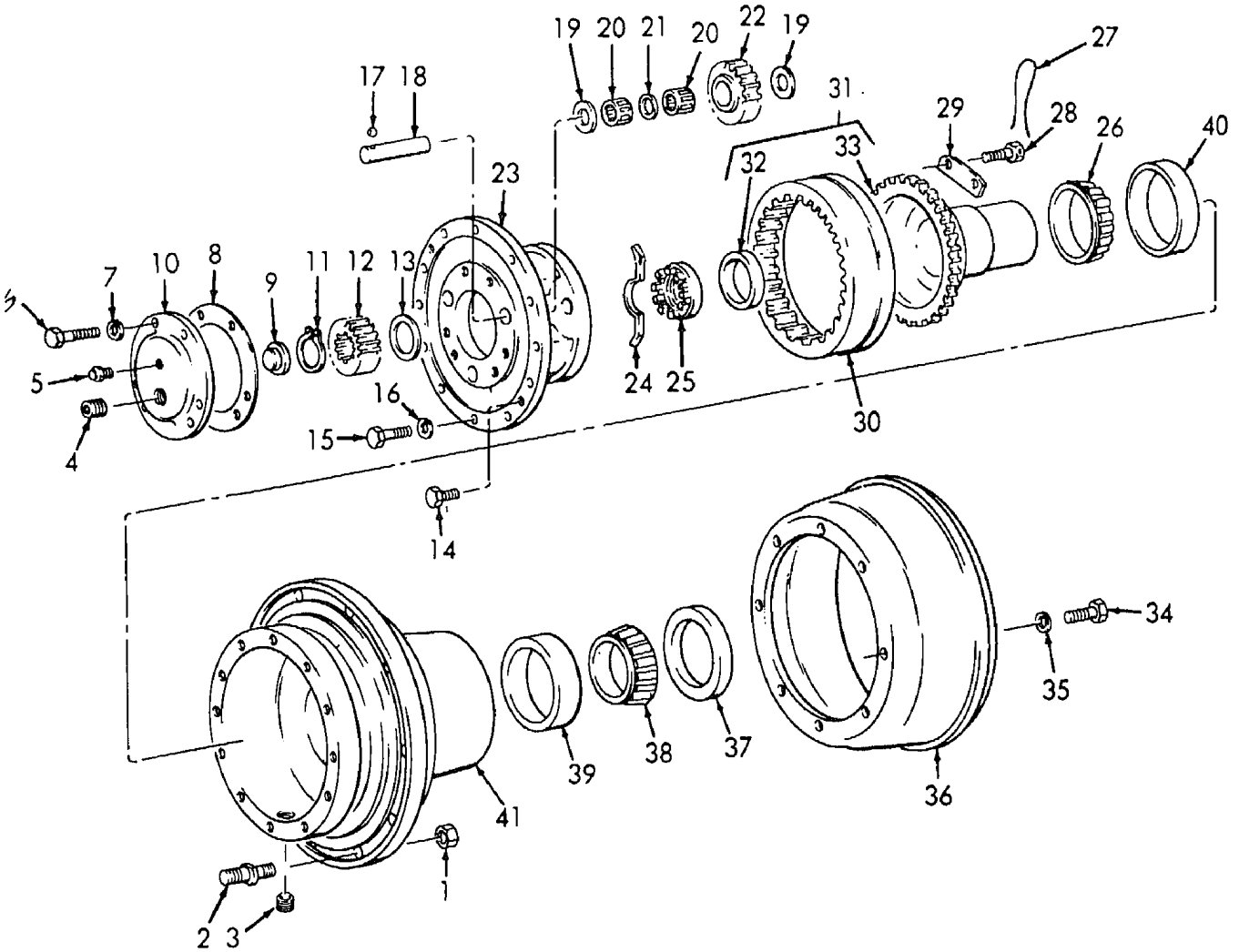

ME 3810-290-34P/154

Figure 154. Planetary Gear

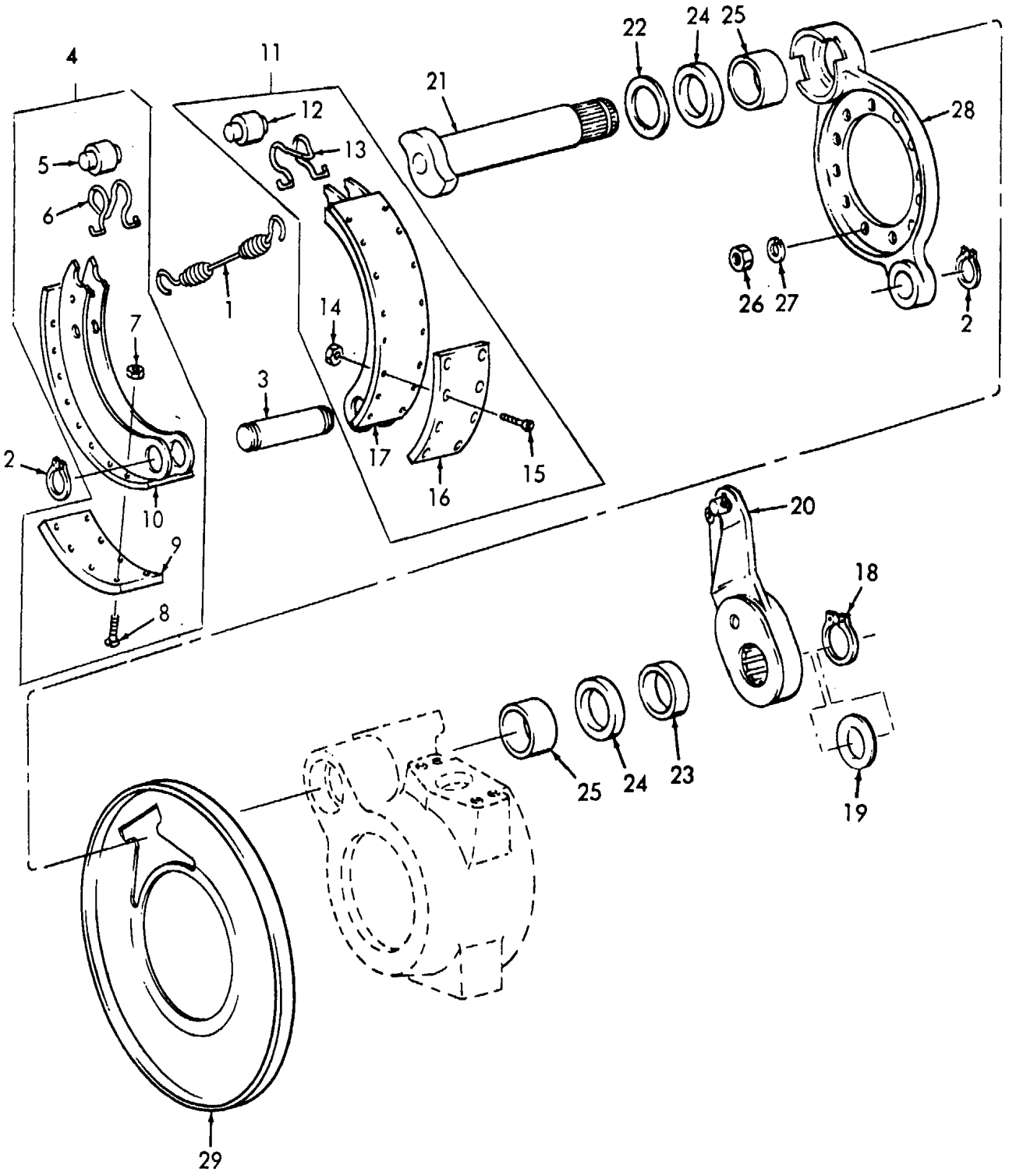

ME 3810-290-34P/155

Figure 155. Brake Components

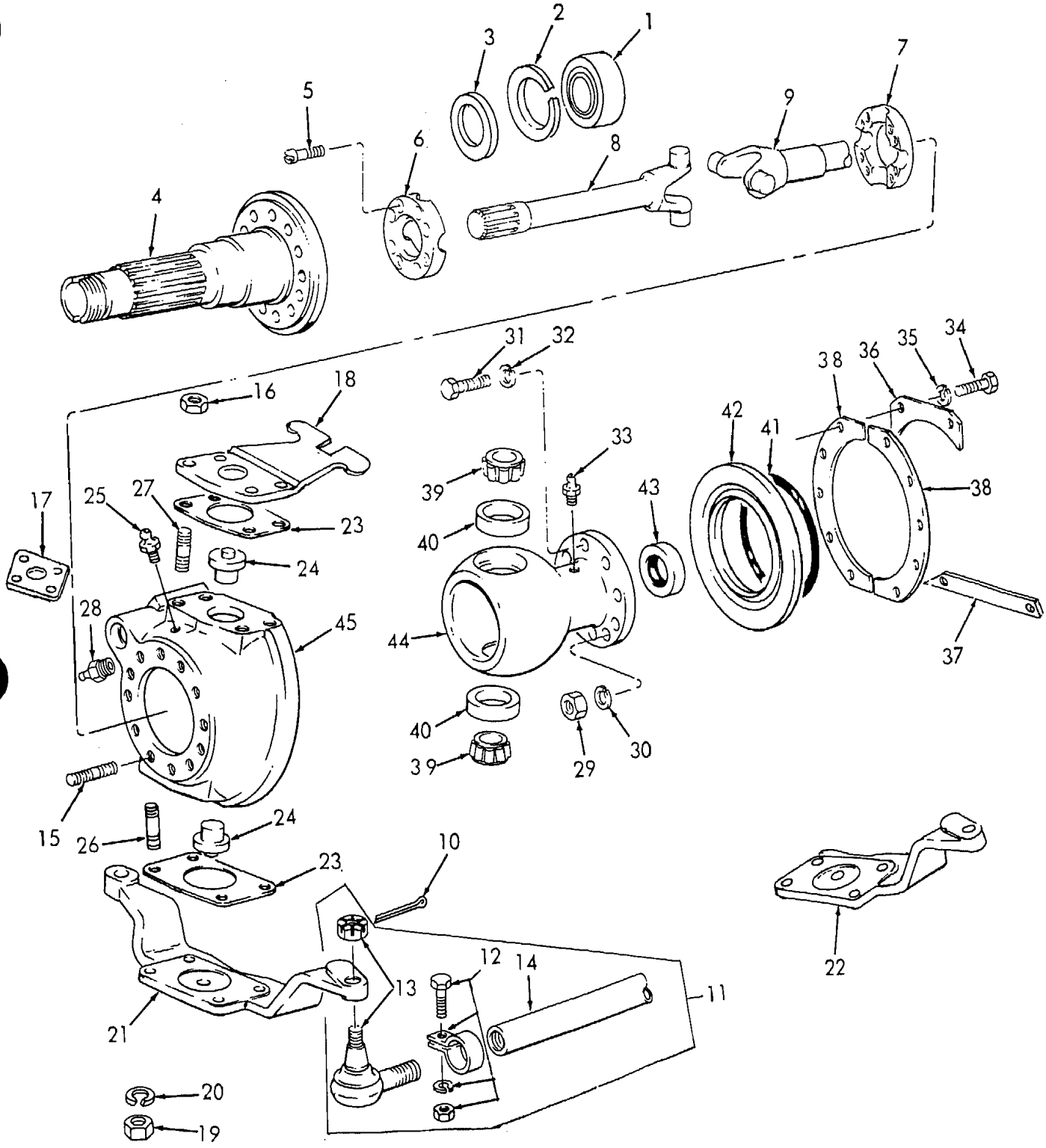

Figure 156. Ball and Socket

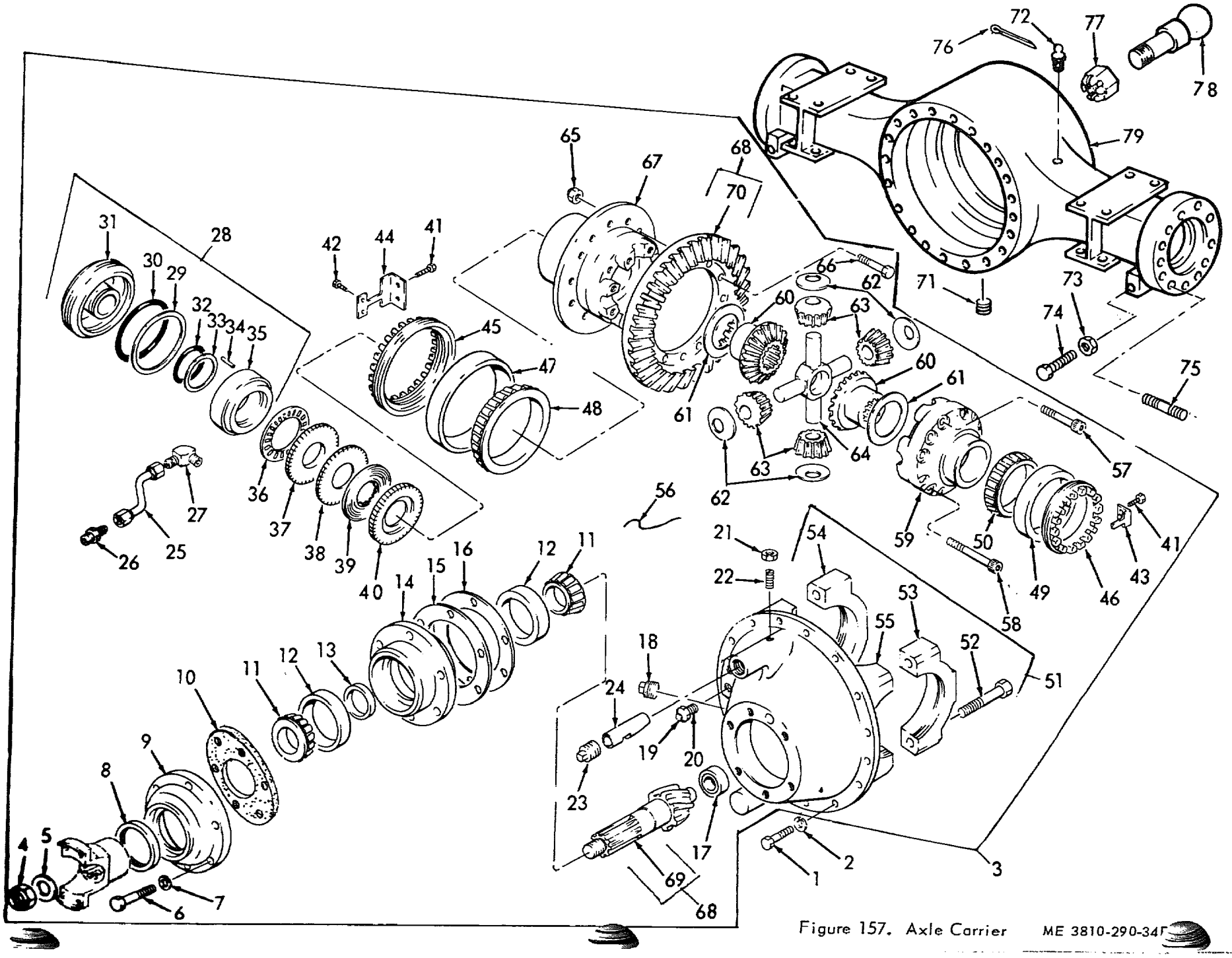

Figure 157. Axle Carrier ME 3810-290-34F

CROSS-REFERENCE TO FIGURE AND ITEM NUMBER

Stock Number	Figure No.	Item No.
1550-072-8888	41	31
1730-842-4625	43	8
2010-937-5496	67	20
2510-753-6271	112	30
	113	77
2520-035-5373	149	24
	155	23
2520-035-5374	149	24
	155	23
2520-081-9950	58	50
2520-125-9063	58	14
2520-132-3158	18	11
2520-132-3150	58	131
	58	131
2520-134-8226	58	
2520-248-3680	156	24
2520-404-2706	30	
2520-410-4449	60	
2520-457-1527	41	
2520-477-5832	147	23
	154	23
2520-477-5833	147	25
	154	25
2520-477-5838	149	4
	156	4
2520-487-2904	68	28
2520-487-3014	68	50
2520-570-8729	65	13
2520-695-7927	85	2
2520-730-6884	58	91
2520-730-6941	59	50
2520-730-6944	58	49
2520-730-6949	58	55
2520-730-8083	58	73
2520-733-0733	100	9
2520-755-7193	53	62
2520-765-8902	152	16
2520-803-9589	58	123
2520-804-7049	59	95
2520-805-2001	150	5
	157	5
2520-821-9439	58	46A
	150	20
	157	23
2520-846-6857	40	50
	42	42
2520-888-2371	58	85
2520-889-5627	150	39
	157	39
2520-889-5628	150	38
	157	38
2520-901-0981	60	19
2520-956-2039	57	6
2530-034-4188	28	12
2530-097-0369	28	16
2530-119-3725	58	46
2530-125-8532	113	64
2530-133-9969	128	26
2530-133-9969	128	25
2530-136-8576	149	13
	156	13
2530-240-9095	147	35
	154	36
2530-246-7012	83	12
2530-248-3679	149	18
2530-248-3680	149	25
2530-248-3682	149	46
	156	45
2530-248-3683	149	46
	156	45
2530-248-3694	148	29
	155	29
2530-249-4250	145	11
	151	11
2530-274-4510	128	30
2530-297-6705	135	19
2530-318-1162	84	4
2530-318-1164	84	5
2530-320-1827	132	6
	133	6
2530-322-9970	136	12
2530-352-4632	132	7
	133	7
2530-353-0481	84	26
2530-353-2922	113	24
2530-359-1491	135	15
2530-359-1823	135	10
2530-371-3320	149	20
2530-374-2187	128	14
2530-401-3594	145	7
	151	7
2530-420-4347	148	11
	155	11
2530-420-9505	148	4
	155	4
2530-426-8393	84	27
2530-426-8336	83	13
2530-437-0476	84	29
2530-464-4396	149	11
	156	11
2530-483-8207	149	13
	156	13
2530-485-9299	148	9
	149	16
	155	9
	155	16
2530-487-2377	148	21
	155	21
2530-487-2084	148	21
	155	21
2530-495-9555	128	10
2530-514-2722	128	21
2530-515-1236	83	10
2530-517-5242	136	24
2530-518-6512	136	24
2530-531-5941	83	3
2530-550-5926	134	4
2530-591-7177	152	6
2530-601-2854	93	26
2530-604-8891	84	5
2530-620-6880	83	28
2530-627-5576	83	9
2530-653-8988	83	23
2530-721-9460	145	
2530-721-9462	157	3
2530-721-9463	151	
2530-721-9459	150	3
2530-728-7467	112	35
	113	15
2530-728-7468	113	41
2530-728-7469	126	
2530-728-7471	113	81
2530-728-7472	136	17
2530-730-6958	115	26
2530-730-7034	112	51
2530-730-7036	112	10
	112	53
2530-730-7049	136	1
2530-730-7052	55	9
2530-753-3853	112	39
2530-755-7191	50	5
2530-755-7198	53	4
2530-755-7292	115	11
2530-755-7338	136	
2530-769-5384	136	24
2530-775-5723	127	12
2530-781-1902	145	8
	151	8
2530-786-0222	135	21
2530-815-3119	153	
2530-815-3120	153	
2530-842-8213	54	12
2530-846-0855	40	31
	42	10
2530-848-1869	42	24
2530-848-8402	55	39
2530-852-5955	127	7
2530-854-1533	33	18
2530-856-3542	50	9
2530-859-7335	50	
2530-862-5822	128	28
2530-869-1521	150	24
	157	24

Stock Number	Figure No.	Item No.
2530-849-7355	93	19
2530-839-4805	119	4
	143	62
2530-927-5613	112	48
	113	14
2530-931-8370	115	6
2530-967-6027	153	6
2540-047-3926	142	4
2540-248-0426	135	26
2540-287-2317	3	1
2540-312-2101	3	14
2540-371-3259	4	30
2540-485-9530	139	9
2540-725-4067	122	4
	122	8
2540-731-1251	2	1
2540-731-1254	2	18
2540-744-1345	5	1
2540-885-6095	3	45
2540-924-6266	122	2
2540-930-9102	3	
2590-040-2187	141	38
2590-191-0804	125	
2590-307-8356	123	22
2590-466-7403	135	8
2590-693-4120	147	5
	154	5
2590-695-0575	135	6
2590-696-3576	135	10
2590-801-2355	121	13
2590-846-6935	43	16
2590-846-6948	38	23
2590-846-6991	43	19
2590-900-1640	114	9
2590-953-2179	121	7
2805-593-1966	147	4
	150	71
	157	71
2805-595-1966	154	4
2805-980-1543	88	1
2815-010-0297	111	36
2815-042-6545	95	1
2815-051-4514	110	13
2815-053-8992	103	7
2815-055-1583	103	3
2815-074-1911	106	2
2815-074-1929	95	2
2815-074-1931	104	9
2815-074-1932	91	2
2815-074-1933	110	14
2815-074-1934	110	14
2815-074-1935	111	22
2815-074-1937	108	
2815-079-8421	102	19
	102	39
2815-081-9329	102	38
	102	41
2815-087-1814	103	21
2815-088-9876	110	4
2815-089-3536	111	41
	111	42
2815-089-6404	111	37
2815-089-6428	95	3
2815-089-6439	102	20
2815-301-7708	96	11
2815-314-3585	75	1
2815-345-6073	103	10
2815-363-7300	108	11
2815-477-3330	94	4
2815-490-5439	91	3
2815-511-2336	109	4
2815-567-4398	103	17
2815-599-6624	75	8
2815-600-5567	103	13
2815-620-7359	130	31
2815-682-7188	98	9
2815-682-7190	105	17
2815-689-8264	103	8
2815-691-9694	111	24
2815-692-4152	110	6
2815-710-1081	130	35
2815-780-5218	105	10
2815-780-5221	64	5
2815-780-5241	103	1
2815-789-1005	107	9
2815-789-4848	105	13
2815-789-4849	108	3
2815-789-4851	106	12
2815-792-8248	107	1
2815-792-8252	91	1
2815-792-8253	108	5
	108	10
2815-792-9020	109	6
2815-792-9021	108	1
2815-792-9026	95	5
2815-792-9028	110	11
2815-792-9841	135	7
2815-792-9849	104	5
2815-797-4802	93	11
2815-807-1367	111	10
2815-810-3824	88	7
2815-820-7455	108	2
2815-820-7843	109	5
2815-830-0246	106	5
2815-849-2601	103	12
2815-866-6402	108	15
2815-885-5731	103	9
2815-886-8207	103	18
2815-891-7599	106	4
2815-893-3216	83	14
2815-901-1032	111	6
2815-903-0903	109	7
2815-903-0905	110	8
2815-903-0907	105	18
2815-903-0909	105	15
2815-921-5339	103	2
2815-921-5343	96	5
2815-921-5345	90	15
2815-921-5346	92	27
2815-921-5348	111	48
2815-921-5352	102	30
2815-921-5354	92	32
2815-921-5355	111	17
2815-921-5356	92	34
2815-921-5357	106	3
2815-921-5358	75	11
2815-921-5364	111	34
2815-921-5365	92	25
2815-921-5366	77	32
	77	41
2815-921-5375	76	28
2815-921-5378	107	4
2815-921-5379	104	7
2815-921-5380	107	13
2815-921-5386	111	23
2815-921-5397	100	1
2815-921-6994	110	2
2815-922-2000	85	12
2815-922-2006	105	14
2815-922-2011	76	11
2815-922-2013	88	10
2815-922-2018	90	6
2815-922-2025	100	13
2815-922-6487	109	1
2815-922-8351	102	6
2815-932-4869	75	5
2815-933-0993	111	39
2815-933-0994	111	38
2815-933-5249	110	9
2815-944-7064	109	8
2815-966-9104	103	11
2815-966-9106	107	21
2815-970-3665	107	18
2815-972-5336	81	3
2815-999-2348	111	11
2910-014-8344	97	20
2910-015-3609	74	33
2910-050-9798	93	6
2910-050-9836	93	7
2910-080-7294	74	8
2910-097-7753	92	36
2910-126-9712	97	27
2910-126-9713	97	21
2910-127-5044	54	17

Stock Number	Figure No.	Item No.
2910-272-6038	97	26
2910-354-1593	97	23
2910-442-5344	54	12
2910-465-1336	66	2
2910-524-7862	86	5
2910-620-7366	74	30
2910-646-9727	48	1
2910-735-6187	97	3
2910-775-1380	96	8
2910-780-5223	73	11
2910-791-1354	74	
2910-789-4875	96	12
2910-789-4876	96	13
2910-792-8984	95	10
2910-792-9771	97	22
2910-922-2427	93	9
2910-922-2428	92	16
2910-932-9634	74	26
2910-944-4043	93	8
2910-966-9143	97	
2910-999-2351	87	2
2910-999-2352	87	6
2910-999-2353	87	7
2910-999-2396	87	4
2910-999-2397	87	5
2920-015-3058	77	43
2920-034-1874	79	37
2920-034-4216	77	27
2920-034-4220	77	38
2920-034-7342	78	14
2920-059-4893	72	60
2920-065-0047	72	49
2920-069-8996	72	26
2920-083-5406	77	39
2920-089-2030	77	
2920-250-5817	93	3
2920-254-4173	89	11
2920-416-4070	90	4
2920-420-7776	123	19
2920-690-9139	77	29
2920-728-7692	71	24
2920-788-3618	72	6
2920-788-3619	72	7
2920-788-3620	72	14
2920-807-2408	77	5
2920-812-0196	77	18
2920-822-2287	77	20
2920-839-1964	77	22
2920-846-6996	43	13
2920-888-8613	77	50
2920-901-7915	77	11
2920-909-2483	71	25
2920-928-6141	72	59
2920-928-6144	72	5
2920-928-6147	72	21
2920-999-2526	77	48
2920-999-2537	77	33
2930-074-1922	107	15
2930-354-1601	100	9
2930-363-7318	100	2
2930-367-3766	52	44
2930-457-1792	80	23
2930-477-3436	79	5
2930-490-5478	79	13
2930-613-9397	100	14
	111	18
2930-725-4061	52	6
	52	7
2930-735-3067	79	18
2930-735-3411	79	18
2930-735-3467	79	24
2930-780-5229	80	7
2930-866-9382	90	18
2930-925-7847	90	27
2930-925-8076	80	24
2930-928-6148	72	25
2940-074-1923	76	23
2940-225-4833	47	35
2940-229-5538	46	2
2940-555-6348	76	9
2940-745-7730	74	10
2940-745-7741	99	3

Stock Number	Figure No.	Item No.
2940-810-5390	75	7
2940-833-0370	75	17
2940-857-0555	47	10
2940-857-0558	47	12
2940-878-0133	47	13
2940-941-1594	[illegible]	3
2940-972-5393	47	9
2940-972-5234	47	15
2940-972-8236	47	14
2990-074-1925	90	7
2990-079-3611	102	17
2990-089-7730	111	
2990-363-9093	89	14
2990-424-4024	93	4
2990-457-6657	92	
2990-457-6659	92	7
2990-661-8951	77	35
2990-682-7197	101	9
2990-740-7605	83	15
2990-780-5231	102	3
	102	4
2990-780-5232	92	24
2990-780-5233	92	1
2990-780-5234	90	8
2990-780-5236	102	6
2990-780-5237	96	24
2990-780-5251	96	23
2990-780-5252	96	25
2990-789-1005	90	10
2990-789-4862	92	5
2990-789-4863	92	3
2990-918-4205	102	23
2990-930-3110	90	17
2990-966-9141	102	15
2990-966-9142	102	34
2990-967-3307	102	35
2990-999-2528	92	6
3020-248-3677	58	110
3020-477-3329	79	23
3020-477-5847	150	22
3020-484-0589	147	22
	154	22
3020-494-3516	147	12
	154	12
3020-844-4367	150	54
	157	64
3020-844-4368	150	50
	157	50
3020-844-4369	150	53
3020-844-4396	157	53
3030-088-4643	79	33
3040-404-6243	43	24
3040-422-1964	41	25
3040-750-0891	13	24
305-782-9435	58	132
3110-013-7759	150	11
	157	11
3110-100-0594	150	45
	157	49
3110-100-0615	157	12
3110-100-0634	40	47
	42	38
3110-100-3621	150	50
	157	50
3110-100-3692	40	46
	42	35
3110-100-6151	147	17
	154	17
3110-101-1796	150	47
	157	47
3110-109-1123	130	21
3110-132-6916	136	24
3110-144-8557	58	10
3110-144-8601	36	12
3110-155-6746	58	19
3110-155-7721	93	17
3110-185-6389	13	1
3110-185-6484	36	9
3110-186-0947	13	2
3110-198-1389	33	20
	34	15
	35	9

Section IV INDEX-FEDERAL STOCK NUMBER AND REFERENCE NUMBER CROSS-REFERENCE TO FIGURE AND ITEM NUMBER

Stock Number	Figure No.	Item No.
3110-198-1389	38	16
3110-196-2949	150	43
	157	48
3110-277-0337	32	33
3110-278-7548	147	40
	154	40
3110-289-6585	147	26
	154	26
3110-293-8579	79	22
3110-418-9557	41	24
3110-469-5346	156	39
3110-477-6775	150	16
	157	16
3110-477-6776	150	15
	157	15
3110-488-3866	147	39
	154	39
3110-488-3867	147	38
	154	38
3110-494-2428	150	17
	157	17
3110-516-5491	58	7
	68	25
3110-529-9490	58	115
	58	120
3110-540-4656	58	98
3110-554-3272	84	28
3110-554-3468	58	27
3110-554-5302	58	38
3110-554-5417	149	1
	156	1
3110-554-5950	58	112
3110-554-5967	67	9
3110-555-5423	58	60
3110-732-0039	38	31
3110-765-1819	58	42
3110-799-9726	150	36
	157	36
3110-869-4184	147	20
	154	20
3110-929-4083	149	41
	156	40
3110-969-4391	41	5
3120-128-2079	136	30
3120-236-3573	79	20
3120-350-4492	78	16
3120-464-7268	147	19
	154	19
3120-484-1715	148	25
	155	25
3120-485-0817	147	13
3120-585-0817	154	13
3120-731-9320	40	14
	40	54
	42	46
3120-736-4248	58	71
	58	77
3120-736-5057	58	72
3120-828-6852	77	12
3120-880-7747	13	14
	15	31
3120-913-2456	14	19
3120-929-8367	72	32
3805-072-7219	145	9
	151	9
3805-483-8232	149	8
	156	8
3805-483-8234	149	9
	156	9
3805-772-7652	19	12
3805-797-4617	84	10
3810-125-8671	28	4
3810-186-0962	36	10
3810-255-5043	42	
3810-255-5044	40	
3810-462-2289	36	3
3810-744-1313	112	7
3810-744-1328	15	34
	16	6
3810-744-1330	13	17
3810-744-1332	14	13
3810-756-0887	43	22

Stock Number	Figure No.	Item No.
3810-756-0898	40	12
3810-756-1109	8	3
3810-756-1408	34	14
	35	7
3810-756-9210	58	15
3810-802-2677	139	14
	143	40
3810-830-7758	4	72
3810-847-7719	156	6
3810-847-7749	149	6
	149	7
3810-888-2978	27	21
3810-928-2670	29	1
3815-735-2412	33	1
3815-756-1212	33	22
	34	17
	35	10
3815-756-1339	33	19
3815-756-1445	40	13
3815-756-1473	38	15
3815-756-1485	38	11
3815-756-1426	38	12
3825-722-3223	3	21
3825-722-3229	3	49
3830-637-2576	150	72
	157	72
3895-552-1391	43	10
3930-057-8492	110	10
3930-082-6580	125	2
3930-499-9937	130	8
3930-755-3429	130	9
3930-833-1877	11	8
	12	60
3930-867-1464	28	13
3930-918-1920	28	11
3930-918-3760	23	18
	24	14
	25	9
	26	9
3930-919-3761	23	22
	24	19
	25	13
3930-951-3781	17	25
3930-960-9326	28	18
	29	11
	30	11
	31	11
3940-807-7527	33	2
3950-077-1519	58	67
	58	69
3950-842-1163	56	7
4010-165-5606	137	5
4010-286-5535	137	7
4030-163-0797	137	6
4310-081-9200	83	27
4310-494-9335	82	39
4310-530-7356	83	25
4310-531-3197	83	4
4320-633-0515	39	25
4320-788-4509	19	33
4320-868-9569	19	32
4320-869-6164	19	34
4370-709-2786	80	32
4710-437-7147	111	14
4710-437-7148	73	12
4710-437-7149	73	16
4710-437-7150	73	19
4710-437-7151	73	20
4710-462-0333	48	6
4710-731-1281	14	20
4720-050-4208	44	16
4720-200-0361	51	2
4720-304-7444	4	52
4720-725-4052	55	11
4720-930-5388	129	2
4730-011-8538	112	22
4730-012-7951	152	10
4730-014-2269	82	33
4730-014-3985	44	20
4730-014-7863	83	2
4730-044-4687	102	19
	102	40

CROSS-REFERENCE TO FIGURE AND ITEM NUMBER

Stock Number	Figure No.	Item No.
4730-044-4687	107	10
	111	44
4730-044-4867	80	17
	80	19
	105	5
4730-045-9771	58	61
4730-045-9833	53	136
4730-050-4203	142	6
4730-050-4205	132	3
4730-050-4208	15	6
	33	23
	34	13
	35	6
	38	7
	40	7
	57	4
	57	11
	66	10
	119	8
	137	10
	138	3
	144	44
	149	34
	156	33
4730-069-1186	112	33
	113	22
	113	75
4730-069-1187	112	31
	113	10
	113	19
	113	48
	113	76
4730-082-1182	22	20
4730-089-6448	73	24
4730-118-5177	113	57
4730-125-2643	11	42
4730-142-1278	95	11
4730-142-1775	107	9
4730-172-0034	44	15
4730-186-3024	74	20
4730-187-0840	150	26
	157	26
4730-187-4207	74	29
	111	45
4730-187-4210	98	1
	100	6
	15	23
	150	23
4730-196-1554	52	10
	98	3
4730-196-2067	112	61
4730-199-3555	53	15
	55	33
4730-202-7301	112	60
4730-202-8251	76	8
4730-202-8970	80	6
4730-202-9539	58	84
4730-203-9058	73	25
	73	26
4730-221-1265	11	23
	11	39
4730-221-3905	82	30
4730-221-6215	82	28
4730-231-3016	53	19
4730-246-9218	70	2
	98	4
4730-249-3900	98	2
4730-254-1801	74	5
4730-263-2733	113	60
4730-270-4616	112	35
	113	27
4730-274-7406	46	1
4730-277-8273	111	43
4730-277-8274	73	15
4730-277-8750	113	35
	113	59
4730-278-0143	21	5
4730-278-0173	113	52
4730-278-4116	52	9
4730-278-6319	113	49
4730-288-7829	98	7
4730-288-9490	112	41
4730-288-9440	113	23
4730-288-9944	53	[illegible]
4730-289-0155	112	2
	112	34
	112	56
	113	16
	113	24
4730-289-5176	51	13
	58	[illegible]
4730-289-5196	112	13
4730-331-4687	76	5
4730-332-0040	112	45
	112	57
4730-356-4702	92	4
4730-359-4731	129	33
4730-406-6957	2	7
4730-427-5121	116	4
	116	16
4730-457-6434	80	14
4730-457-6439	73	27
4730-469-6605	11	37
4730-471-0105	12	63
4730-471-0106	12	12
	12	24
4730-526-0304	112	4
	112	40
	113	44
4730-554-7540	83	1
4730-555-9007	140	6
4730-580-2504	113	40
	113	62
4730-585-8378	112	50
	113	47
4730-595-0033	140	4
4730-595-2572	112	54
4730-614-0205	128	24
4730-618-4556	53	17
	55	3
4730-618-5382	55	41
4730-618-7627	112	17
	113	8
	116	17
4730-618-8589	129	31
4730-673-1811	55	38
4730-674-6831	28	9
	41	28
4730-684-1416	129	32
4730-690-3830	52	1
4730-698-5001	112	59
	113	82
4730-701-1964	112	12
4730-702-3467	12	98
4730-709-2786	80	20
	111	46
4730-722-2759	52	11
	55	32
4730-722-4891	129	20
4730-730-7030	112	14
4730-737-7855	112	55
4730-740-2580	73	23
4730-740-2581	73	13
	73	17
	73	21
4730-740-2582	73	14
	73	18
	73	22
4730-741-2917	150	
	157	
4730-744-1230	12	49
4730-744-1234	12	48
4730-744-1235	11	14
4730-755-7435	11	22
4730-755-7471	12	95
4730-755-7515	12	51
4730-755-7606	12	4
4730-755-7682	17	15
4730-777-4131	54	3
4730-810-0059	5	42
4730-818-2467	55	18
	129	16
4730-834-6187	40	19
4730-839-1481	23	24

CROSS-REFERENCE TO FIGURE AND ITEM NUMBER

Stock Number	Figure No.	Item No.
4730-839-1520	23	25
4730-839-1522	23	21
4730-842-2191	147	3
	154	3
4730-846-0150	14	22
4730-853-1182	120	38
4730-856-8296	129	21
4730-878-2180	55	8
	55	40
4730-886-5975	107	11
4730-895-2975	129	15
4730-903-4846	11	26
4730-903-7175	15	10
4730-908-3194	51	1
4730-909-8627	4	51
	52	5
4730-917-4794	129	36
4730-921-6413	111	12
4730-922-1966	81	4
4730-922-1999	74	6
4730-922-2424	74	13
4730-929-3463	74	
4730-933-0742	129	26
4730-936-4928	150	27
	157	27
4730-946-7823	12	50
4730-954-1281	93	13
4730-965-1257	107	12
4730-995-1230	129	9
4820-034-1690	130	10
4820-130-4840	52	8
4820-226-8499	53	12
4820-276-9041	82	24
4820-340-1279	112	42
4820-839-1478	23	12
4820-839-1480	23	16
4820-839-1482	23	17
4820-839-1512	23	23
	24	20
	25	14
4820-849-1220	74	12
	74	32
	100	5
4820-886-8796	112	11
4820-925-0076	112	
5305-012-0233	21	10
	58	11
	58	22
	58	39
	58	56
	58	87
	58	104
	71	5
5305-012-1832	135	20
5305-017-9848	104	3
5305-017-9864	79	30
5305-017-9882	85	8
5305-018-0129	101	3
5305-018-6283	101	1
	105	2
5305-018-6289	90	2
5305-021-2563	92	26
5305-042-6417	144	5
	144	16
5305-042-9478	79	28
	80	10
5305-044-4153	130	28
5305-045-1988	75	9
	79	25
5305-068-0502	8	16
	52	15
	56	1
	114	8
	121	1
	124	3
5305-068-0504	121	12
5305-068-0506	2	15
	45	11
	45	19
	48	4
	49	9
	49	18
5305-068-0506	50	3
	88	7
	139	12
	141	59
	143	14
	143	21
5305-068-0508	101	12
	103	14
5305-068-0511	74	25
	80	1
	80	30
	130	1
5305-068-7837	96	3
5305-069-5572	85	10
	130	26
5305-069-5576	75	2
5305-071-2069	111	9
5305-071-2073	22	7
	41	3
5305-071-2239	101	20
5305-082-5161	84	16
5305-084-6192	72	17
5305-118-6533	136	13
5305-129-9428	131	5
	131	7
5305-168-8192	58	65
5305-206-3518	18	1
	144	23
5305-206-5776	99	16
	111	19
5305-206-6786	80	11
	91	8
5305-225-3839	9	9
	10	7
	10	15
	10	40
	40	8
	42	13
	44	9
	117	5
5305-225-3840	88	8
	88	11
5305-225-3843	89	12
	111	
5305-225-6943	77	37
5305-225-8497	143	60
5305-226-7768	150	66
	157	65
5305-237-8028	135	11
5305-253-5620	105	11
5305-267-8953	2	4
	40	39
	49	50
	135	3
	143	9
5305-267-8974	143	32
5305-267-8979	118	37
5305-269-2801	110	5
	118	44
5305-269-2803	4	3
	4	7
	52	24
	71	4
5305-269-2805	49	46
	65	7
	76	4
	128	3
	141	23
	143	38
	144	49
5305-269-2807	144	1
5305-269-2808	118	46
	144	2
	144	51
5305-269-2815	91	9
5305-269-3209	9	10
	51	4
	99	4
	99	10
5305-269-3210	46	7
	74	39
	111	29

Section IV INDEX-FEDERAL STOCK NUMBER AND REFERENCE NUMBER CROSS-REFERENCE TO FIGURE AND ITEM NUMBER

Stock Number	Figure No.	Item No.
5305-269-3211	71	8
	83	20
5305-269-3212	136	21
5305-269-3213	20	1
	27	3
	40	23
	40	29
	42	8
	42	17
	82	20
	139	16
	143	48
5305-269-3216	32	6
	97	1
5305-269-3218	22	4
	91	6
	102	7
	105	1
5305-269-3219	79	34
	91	7
	92	2
5305-269-3236	116	7
	116	20
	143	56
5305-269-3245	144	50
5305-272-2080	96	7
5305-272-5552	5	
5305-282-4209	116	
5305-352-6364	58	126
5305-352-6796	149	5
	156	5
5305-354-1227	106	1
5305-416-3967	93	1
5305-428-6527	77	47
5305-517-5254	136	16
5305-527-4193	17	19
	37	7
5305-531-2030	5	
5305-543-2419	74	3
	80	29
5305-577-5462	73	6
	95	6
	111	7
5305-617-8194	147	14
	154	14
5305-619-5753	93	14
5305-637-1455	71	16
5305-637-4639	116	
	116	
5305-639-8828	96	9
5305-680-5832	3	5
	49	36
5305-680-7331	49	13
5305-688-2111	101	2
	104	2
5305-688-2338	120	33
5305-709-8539	71	13
5305-710-4192	147	6
	154	6
5305-710-4194	71	14
	82	37
5305-716-8165	144	31
5305-719-5238	147	15
	154	15
5305-724-5910	19	1
	38	13
5305-724-5913	39	3
	150	6
	157	6
5305-725-2317	76	20
	104	1
5305-725-4183	38	8
	143	65
5305-726-2551	144	10
5305-726-2553	144	22
5305-727-5677	54	4
5305-728-8318	72	27
5305-734-7430	41	4
5305-761-4227	143	53
	150	1
	157	1
5305-775-5117	72	61

Stock Number	Figure No.	Item No.
5305-775-5194	72	37
5305-780-8105	92	14
5305-782-9494	17	11
	EA	8
5305-782-9495	58	3
	146	24
	153	43
5305-819-8736	10	44
5305-833-3644	23	11
5305-835-9917	4	45
5305-855-0884	89	3
5305-855-8006	39	5
	39	34
	41	7
	41	30
5305-882-8257	70	16
5305-939-9204	1	6
5305-944-6024	136	4
5305-961-6507	47	9
5305-970-4114	72	1
5305-984-3698	150	41
	157	41
5305-984-6189	72	51
5305-984-6191	72	41
5305-984-6193	5	
	9	5
	78	9
	137	1
5305-988-1721	52	34
5305-988-1723	121	8
	124	12
5305-990-6444	141	46
	141	63
5305-993-1848	8	10
	9	2
5305-993-2463	141	42
5305-999-2284	78	1
5306-018-9691	81	8
5306-021-2516	99	1
5306-021-2517	105	3
5306-021-2548	88	3
5306-021-2553	98	5
5306-022-1950	102	14
5306-053-8378	91	5
5306-059-3529	102	31
5306-064-5356	77	1
5306-089-6920	130	34
5306-180-2689	90	2
5306-225-8500	100	11
5306-225-8504	82	
5306-225-8508	82	
5306-225-9081	82	1
5306-225-9084	149	3
	156	34
5306-225-9087	53	3
	126	1
	143	4
5306-225-9088	89	2
5306-225-9089	5	
	116	
	118	26
	118	42
	120	9
	121	6
	127	3
	141	35
	141	55
	141	71
	143	26
	144	
5306-226-4824	80	21
	111	15
5306-226-4826	79	6
	80	8
	81	1
5306-226-4844	100	3
5306-281-9545	49	3
5306-292-8850	47	1
5306-352-6621	58	1
	58	9
5306-515-9854	17	
5306-550-1201	101	1

5306-550-9129	77	31
	77	40
5306-604-8012	88	6
5306-613-9396	86	1
5306-625-2818	52	41
5306-632-1662	84	23
5306-637-9623	105	3
5306-680-7610	83	5
5306-685-8361	75	4
5306-712-3285	127	15
5306-775-5209	77	5
5306-781-7776	102	32
5306-781-7777	102	29
5306-783-5193	77	10
5306-822-3685	87	1
5306-834-8450	84	11
5306-846-3246	87	3
5306-870-6222	76	19
5306-899-2139	91	4
5306-900-8825	79	9
5306-940-9062	102	12
5306-940-9079	107	2
5306-947-7990	102	1
5307-486-3385	147	2
	154	2
5307-486-3386	147	2
	154	2
5307-550-1879	107	7
5307-613-8005	149	27
	156	26
5310-010-3322	75	10
	75	3
	79	11
	79	31
5310-010-5605	47	5
5310-011-4544	94	2
5310-011-7062	74	23
5310-012-0217	10	43
5310-012-0370	2	16
	71	10
	82	35
5310-012-1574	20	8
	20	11
5310-012-1917	85	4
5310-012-2198	89	1
5310-012-2366	76	12
5310-012-3179	101	10
5310-012-3221	15	3
	22	1
	27	1
	28	1
	33	8
	40	38
	42	26
	88	2
	116	9
	116	22
5310-012-4589	16	1
	38	26
5310-012-4595	33	3
	34	8
	35	1
	40	2
	42	21
5310-012-4818	10	5
	10	13
	10	38
	117	2
	124	1
5310-012-5653	150	65
	157	65
5310-012-8122	58	1
	58	20
	150	4
	157	4
5310-013-1046	33	4
	34	9
	35	2
	40	3
	42	2
	44	23
	44	28

5310-013-1050	59	21
5310-013-7718	4	1
	88	14
5310-014-2247	2	13
	49	2
	49	1
	49	7
	49	15
	49	19
	49	37
	49	47
	50	1
	59	1
	118	32
	120	22
	121	10
	135	1
	139	10
	141	3
	141	40
	141	57
	143	7
	143	11
	143	18
5310-017-4833	33	12
5310-017-4851	9	7
5310-017-4857	8	14
5310-018-7123	4	5
	6	2
	15	4
	20	2
	21	13
	22	2
	33	9
	36	2
	40	24
	40	30
	42	9
	42	18
	43	24
	49	12
	49	45
	1	5
	52	23
	58	12
	58	23
	58	29
	58	40
	58	57
	58	88
	58	105
	65	8
	71	9
	114	2
	116	6
	116	10
	116	19
	116	23
	139	15
	143	37
	143	41
	144	48
	144	52
5310-018-7128	40	35
	42	23
5310-018-7241	2	3
	2	14
	4	25
	8	15
	43	2
	44	2
	45	10
	45	14
	48	3
	49	2
	49	8
	49	17
	49	20
	49	31
	49	48
	50	2
	52	14

CROSS-REFERENCE TO FIGURE AND ITEM NUMBER

Stock Number	Figure No.	Item No.
5310-018-7241	56	2
	59	2
	114	7
	117	3
	120	23
	121	11
	135	2
	139	11
	141	4
	141	41
	141	58
	143	8
	143	12
	143	19
5310-018-7712	38	20
5310-020-0359	144	8
	144	19
5310-021-8582	47	1
5310-022-5851	143	51
5310-022-5853	121	4
	146	9
	146	16
	152	12
	153	20
5310-023-4457	99	15
5310-042-6895	17	12
	17	17
	17	18
	22	5
	22	6
	37	5
	37	6
	38	9
	40	6
	41	1
	41	2
5310-044-4153	70	9
5310-045-1005	17	2
5310-045-3296	8	9
	73	3
5310-045-3299	72	19
	72	52
	72	55
	72	58
	137	2
5310-050-3377	96	22
5310-052-6454	149	31
	156	30
5310-053-8377	103	22
5310-060-9435	33	13
5310-062-2051	77	21
5310-080-6004	73	8
	76	22
	79	36
	99	6
	99	12
	101	5
	101	26
	111	20
	111	28
	143	42
5310-081-2658	77	36
5310-082-0650	9	8
5310-085-3891	84	17
	84	24
	127	24
5310-085-3896	83	21
5310-087-3130	108	8
5310-118-6314	19	36
5310-167-0721	62	16
	90	3
5310-167-0839	77	45
	78	6
	93	15
5310-176-8173	39	1
5310-178-9612	77	42
5310-189-1825	113	
5310-193-7491	5	
5310-193-9753	95	12
5310-205-8331	70	10
5310-208-1919	10	1
	10	9

Stock Number	Figure No.	Item No.
5310-208-1919	10	17
	10	21
	10	24
	10	27
5310-208-3508	84	2
5310-208-5290	10	42
5310-209-0965	47	2
	52	29
	147	7
	154	7
5310-209-1869	4	23
	4	26
	10	2
	10	6
	10	10
	10	14
	10	39
	21	7
	36	5
	40	9
	42	14
	44	10
	45	19
	49	38
	121	9
	124	2
	124	13
5310-209-2090	99	2
5310-209-6074	2	17
	71	11
	79	26
	82	36
	152	9
5310-236-1336	149	30
	156	23
5310-239-7751	148	26
	155	26
5310-245-9892	136	6
	136	10
5310-249-1869	4	11
5310-261-7340	73	7
	74	2
	74	24
	74	40
	76	3
	76	21
	79	29
	79	35
	80	2
	80	12
	80	31
	89	5
	91	10
	92	3
	95	7
	90	5
	90	11
	101	4
	104	4
	105	4
	111	9
	111	27
	130	2
5310-262-2914	92	31
5310-262-4701	76	13
5310-262-4823	128	32
5310-262-5429	92	30
5310-269-4052	8	4
	136	2
5310-269-5835	83	7
5310-269-5938	144	12
5310-270-7111	103	6
5310-274-4658	110	1
	110	7
5310-274-8942	34	12
5310-276-3015	97	2
5310-282-5699	147	1
	154	1
5310-286-8455	71	12
5310-297-8836	89	10
	101	13
5310-352-6339	58	2

CROSS-REFERENCE TO FIGURE AND ITEM NUMBER

Stock Number	Figure No.	Item No.
5310-358-6115	136	15
5310-361-9897	72	4
	72	39
5310-364-3149	93	12
5310-407-9566	79	7
	80	9
	80	22
	81	2
	85	5
	93	2
	99	8
	100	4
	100	12
	101	17
	105	9
	111	16
5310-431-4320	146	2
	153	1
	153	5
5310-479-6859	27	2
5310-484-6189	152	9
5310-485-0941	148	7
	148	14
	155	7
	155	14
5310-515-9962	116	
	116	
5310-531-0525	116	
5310-531-1194	76	2
	88	4
	118	47
	128	1
	141	21
	143	54
	144	47
5310-550-1680	18	2
	78	4
	143	52
5310-550-3722	71	17
5310-557-8734	148	22
	155	22
5310-582-5965	88	9
	88	12
	89	4
	89	6
	89	13
	92	15
	96	4
	96	10
	101	11
	103	15
	111	
5310-584-5272	85	9
	130	29
5310-584-7888	149	22
	149	33
	156	20
	156	32
5310-584-7889	38	2
5310-595-6165	117	4
5310-595-6852	85	11
	130	27
5310-595-6993	143	13
	143	20
	143	31
5310-595-8121	94	3
5310-596-7691	141	45
	141	62
5310-637-9541	101	21
	143	47
5310-639-1055	89	5
5310-639-1497	22	3
5310-639-1532	141	54
	141	70
	143	25
5310-655-9341	136	3
5310-655-9544	5	37
5310-660-2649	2	2
	116	
	116	
5310-680-7297	9	11
	32	7

Stock Number	Figure No.	Item No.
5310-680-7297	46	8
	82	21
	118	45
	128	2
	143	55
5310-685-1653	76	11
5310-688-2198	4	44
5310-701-4891	148	19
	155	19
5310-728-2044	143	3
5310-732-0558	143	46
5310-732-0559	52	22
5310-752-5555	54	3
5310-757-3514	13	7
5310-761-1985	110	12
5310-763-8905	54	1
	150	73
	157	73
5310-763-8920	136	7
	142	1
5310-768-0318	78	3
5310-775-5130	72	40
5310-775-5139	72	3
	72	44
5310-777-5399	144	
5310-780-8116	102	2
5310-792-9785	84	15
5310-809-3365	78	10
5310-809-4058	101	22
5310-820-6653	8	2
	16	2
	19	2
	38	14
	38	27
	54	2
	77	2
	136	8
	137	12
	138	5
	142	2
	144	33
	147	35
	150	7
	154	35
	157	7
5310-823-8803	146	4
	153	3
5310-827-4978	72	18
5310-833-3340	4	2
	82	22
5310-833-9301	23	1
5310-834-7601	148	27
5310-834-7605	58	4
	134	13
	143	63
	144	6
	144	24
	146	25
	147	16
	150	2
	152	2
	153	44
	154	16
	155	27
	157	2
5310-834-8732	77	4
	77	44
	78	5
5310-841-5594	4	43
5310-843-8091	150	61
	157	61
5310-851-2674	4	10
	4	19
	4	24
	43	1
	49	30
	52	13
	114	6
	150	21
	157	21
5310-867-1465	28	17
5310-878-8980	150	62

CROSS-REFERENCE TO FIGURE AND ITEM NUMBER

Stock Number	Figure No.	Item No.
5310-878-8980	157	62
5310-880-2004	145	5
	151	5
5310-880-2005	145	5
	151	5
5310-896-8961	119	7
5310-901-0279	121	5
5310-912-5631	111	35
5310-920-0652	71	26
5310-920-0661	72	12
5310-920-0831	71	27
5310-920-0838	27	4
5310-934-9751	8	8
5310-935-9088	58	34
5310-953-8628	141	22
5310-959-4675	71	3
5310-959-4679	82	6
	82	9
	82	19
	127	16
5310-964-3415	118	25
5310-965-6000	77	23
5310-975-2075	4	5
	49	11
	49	44
	58	28
	71	2
	116	5
	116	18
	120	4
	143	36
5310-981-8530	84	18
5310-985-4188	70	20
5310-999-2296	77	5
5315-011-9120	153	41
5315-013-7214	142	5
	150	76
	157	76
5315-043-1787	110	3
	110	9
5315-059-0187	134	2
	134	32
5315-059-0494	132	1
	133	1
5315-059-2285	94	3
5315-082-3969	109	6
5315-151-8882	120	1
	120	27
5315-238-0838	104	8
5315-264-3102	130	5
5315-298-1499	152	3
5315-363-8100	92	35
5315-485-0958	147	24
	154	24
5315-597-5387	85	3
5315-616-5515	93	10
	93	19
5315-616-5525	90	14
5315-760-7414	147	18
	154	18
5315-839-2325	4	59
	5	
	96	1
	101	8
	118	29
	120	13
5315-839-5822	119	1
5315-845-4232	96	2
5315-899-4116	132	4
	133	4
5325-291-7705	143	28
5325-954-3828	5	
5330-043-3988	145	10
	151	10
5330-050-0056	136	29
5330-080-0309	84	25
5330-085-3494	127	20
	127	42
5330-130-7779	131	9
5330-141-3553	127	43
5330-179-6227	108	16
5330-197-8116	111	21
5330-198-6177	3	44
5330-202-4167	74	42
	91	12
5330-254-5655	52	30
5330-258-7471	65	11
	70	4
	70	12
5330-258-7472	60	24
	61	2
5330-258-7479	61	23
5330-260-9311	77	25
5330-285-3480	77	34
5330-291-6658	129	29
5330-292-0492	59	32
	59	130
5330-292-2188	78	12
5330-297-7319	77	30
5330-311-9234	127	52
5330-353-2901	128	37
5330-408-5959	60	4
5330-420-1702	153	34
5330-455-2662	153	18
5330-460-4570	153	11
5330-477-4761	91	15
5330-485-0833	148	24
	155	24
5330-485-0896	147	8
	154	3
5330-494-2497	127	45
5330-498-2873	149	39
	156	36
5330-531-6465	156	3
5330-580-1726	101	29
5330-580-5342	84	19
5330-599-0505	100	17
5330-599-6464	150	8
	157	8
5330-604-8094	76	14
5330-624-6296	100	10
5330-625-3604	136	23
5330-629-6340	76	15
5330-641-6449	84	1
5330-695-2157	130	3
5330-719-9554	16	11
5330-719-9572	16	8
5330-728-8204	15	13
5330-728-8295	15	12
	15	16
5330-728-8306	42	21
5330-728-8307	40	26
	42	12
5330-731-7749	13	13
5330-731-7861	14	12
5330-731-8660	58	47
5330-731-8702	58	25
5330-737-2612	58	8
5330-752-7673	77	46
5330-753-1259	58	26
5330-753-1265	58	9
5330-753-1267	58	36
5330-757-3422	13	11
	14	8
	15	28
5330-757-3424	15	26
5330-757-3428	14	10
5330-757-3466	58	44
5330-757-3467	58	43
5330-808-9781	40	33
5330-814-0794	150	30
	157	30
5330-817-9034	150	32
	157	32
5330-823-4881	72	30
5330-823-4882	72	8
5330-823-4883	72	31
5330-823-4919	72	29
	72	33
5330-823-4920	72	24
5330-832-8569	112	
5330-833-3652	23	14
5330-842-1901	77	13
5330-842-8212	93	16

CROSS-REFERENCE TO FIGURE AND ITEM NUMBER

Stock Number	Figure No.	Item No.
5330-843-2709	40	53
	42	45
5330-843-2720	40	45
	42	37
5330-875-1985	149	43
	156	42
5330-883-2799	127	35
5330-890-8152	50	6
	50	7
5330-892-2503	23	7
5330-899-2762	134	23
5330-905-2008	80	5
5330-914-0703	77	15
5330-927-0065	72	34
5330-972-5392	47	20
5330-983-9733	80	13
5330-993-0734	132	16
5330-997-9020	77	26
5330-998-3263	79	21
5340-014-2583	92	29
5340-019-4207	130	11
5340-023-5584	13	4
5340-023-7548	17	21
5340-123-2686	58	107
5340-128-2094	136	19
5340-129-9416	131	11
5340-130-7798	134	21
5340-152-0457	45	1
5340-199-8041	47	16
5340-200-4885	83	8
5340-237-8324	111	47
5340-237-8327	90	16
5340-248-3159	68	51
5340-281-6623	148	2
	155	2
5340-282-5031	103	5
5340-282-5312	127	26
5340-282-7125	127	50
5340-294-0600	97	25
5340-359-4042	130	19
5340-366-0618	92	28
5340-400-5555	153	12
5340-410-6763	21	2
5340-447-9003	128	36
5340-470-5529	21	4
5340-491-1673	94	1
5340-514-0554	132	13
5340-530-6790	147	11
	154	11
5340-598-1414	58	59
5340-687-3804	132	22
5340-690-8607	58	53
5340-715-1152	77	16
	77	24
5340-720-0759	13	25
5340-720-1456	58	129
5340-726-0620	58	108
5340-731-7856	141	32
5340-731-9464	79	19
5340-731-9539	40	18
	42	4
5340-780-8112	90	11
5340-801-8731	76	16
5340-803-9972	149	2
	156	2
5340-805-6002	130	20
5340-806-4636	58	37
	58	54
	58	117
	58	122
5340-822-2236	77	19
5340-822-2241	77	17
5340-832-8574	47	25
5340-833-3648	23	9
5340-833-3649	23	3
5340-855-3255	146	5
5340-896-1513	130	7
5340-946-2231	3	8
5340-957-1826	77	14
5355-020-9542	120	34
5355-152-8353	119	9
5355-413-0145	113	

Stock Number	Figure No.	Item No.
5355-505-2949	22	12
5355-741-1761	27	7
5360-176-0705	148	6
	148	13
	155	6
	155	13
5360-352-6438	118	1
5360-353-6438	4	58
5360-404-6266	58	134
5360-422-2572	60	16
5360-433-3771	60	6
5360-450-4116	148	1
	155	1
5360-477-4769	93	5
5365-152-0184	144	55
5365-182-6714	130	14
5365-236-3822	150	46
	157	46
5365-241-6905	150	45
	157	45
5365-245-3427	147	21
	154	21
5365-252-4746	127	47
5365-282-6962	58	78
5365-298-6563	127	33
5365-350-6643	68	33
5365-353-2461	148	18
	155	18
5365-404-8393	149	24
	156	23
5365-410-4918	79	18
5365-450-6015	153	32
5365-453-6632	22	8
5365-650-0979	127	8
5365-760-7332	148	23
	155	23
5680-626-5918	4	49
5810-022-5853	153	26
5925-026-4767	125	11
5930-020-9535	123	23
5930-058-1576	113	74
5930-064-0854	137	4
5930-105-5474	6	5
5930-226-6429	123	21
5930-296-6318	123	20
5930-543-0214	125	8
5930-670-2340	125	4
5930-679-9956	123	24
5930-888-9865	112	64
5930-927-3482	120	31
5935-436-2490	8	7A
5935-814-7432	141	6
5935-821-2944	77	7
5935-846-3894	125	
5940-549-6583	141	16
5940-942-2848	125	
5940-944-5017	44	
5945-054-4380	121	18
5945-054-4391	121	19
5945-965-9895	125	7
5961-788-3650	72	45
5970-082-8300	77	53
5970-401-1642	141	9
5970-401-1692	141	30
5970-404-0996	144	14
	144	28
5970-404-0997	144	13
	144	21
	144	27
5970-657-8133	77	49
5970-669-9431	77	52
5970-734-8918	78	8
5970-734-8919	78	7
5977-546-2358	43	14
5977-578-6495	135	12
5977-736-5156	43	19
5977-754-8153	78	2
5977-786-9564	78	13
5977-997-9766	72	20
6110-757-7197	77	28
6115-055-0829	90	12
6115-055-0830	102	24

Stock Number	Figure No.	Item No.
6115-055-0831	103	20
6115-055-1564	103	16
6115-055-1584	74	43
	80	34
	107	6
6115-055-2657	96	6
6130-764-5600	72	46
6140-057-2554	144	
6150-073-1268	141	1
6150-546-3642	43	15
6150-758-0332	77	3
6210-699-9458	123	1
6220-337-6471	9	13
6220-491-5350	8	12
6220-571-6855	9	4
6220-577-3434	7	1
6220-577-3435	7	1
6220-678-9046	9	1
6220-725-6893	8	5
6220-725-1916	7	1
6220-727-3288	7	1
6220-731-5920	8	11
6220-788-9943	8	6
6220-819-7029	9	3
6220-890-5907	8	12
6220-953-4652	8	5
6220-993-5546	125	5
6240-019-0877	7	2
	9	6
	9	14
6240-044-6914	4	16
6240-155-7866	121	21
6240-155-8714	121	17
6240-266-9940	123	5
	123	12
6240-643-0687	8	7
6240-727-8573	8	7
6240-877-3405	8	13
6240-951-8989	6	4
6350-507-3141	125	6
6620-115-9042	123	15
6620-970-3667	80	28
6625-961-6178	123	17
6680-403-5967	111	25
6680-507-9980	124	10
6680-514-4090	124	8
6680-725-4066	54	20
6680-933-3600	123	16
6685-064-6954	125	1
6685-410-1921	18	5
6685-489-8758	113	68
6685-499-8790	55	2
6685-814-5271	125	3
6685-936-2139	123	14
6685-993-5548	123	18
9905-202-3539	8	17
9905-205-2795	8	17

Reference No.	Mfg Code	Fig No.	Item No.
AAHOC-0350	18265	47	4
AC2009	63477	128	24
AC2034	63477	128	22
AC2036	63477	128	23
AC2140	63477	129	10
AC2191	63477	128	7
AC2196	63477	129	37
AC2265	63477	52	8
AC2622	63477	112	30
	63477	113	77
AC2832	63477	128	18
AC2838	63477	128	20
AC43836	63477	128	26
AC43887	63477	128	25
AC484	63477	113	11
AD1513	63477	128	16
AD1514	63477	128	6
AD1777	63477	128	19
AD1920	63477	128	21
AE1116	63477	128	13
AE836	63477	128	14
AF53999	63477	128	
AJ7-70	72794	10	47
AN107408	88044	49	3
AN415-2	88044	6	6
AN520-416R8	88044	141	42
AN816-8	88044	129	20
AS789AS789	98761	4	34
	98761	4	41
AW388	60703	2	
A1-2925	46529	52	42
A2-2702	46529	52	43
A200	23382	119	34
A21600	41625	118	21
A2299	97109	116	11
	97109	116	24
A2622U	61208	68	51
A2622W	61208	67	29
	61208	69	5
A26698Y	61208	67	13
	61208	67	25
A2669CH	61208	68	31
A2669HV	61208	68	33
A2695AL	61208	68	17
A2703P	61208	60	19
A27032	61208	60	6
A27078	61208	60	16
A2711AB	61208	61	28
A2888AH	61208	67	23
A2888AW	61208	68	14
A2903M	61208	67	2
A2903S	61208	67	9
A2903W	61208	61	3
A2916AV	61208	68	45
A291680	61208	68	
A29168L	61208	65	19
	61208	65	23
A2916BT	61208	63	19
A2916C8	61208	61	23
A2916CT	61208	68	7
A2916CV	61208	68	11
A29160H	61208	65	11
	61208	70	12
A29160K	61208	60	24
	61208	61	2
A2916DP	61208	63	13
	61208	64	6
A29160H	61208	70	4
A2952E	61208	64	11
A3-1475	46529	52	46
A302059-2-1-2	99103	17	4
A31532	41625	118	14
A31538	41625	118	15
A4-1475	46529	52	45
A42594	41625	118	9
A4264	98761	4	48
A44808	61208	67	15
A4481A	61208	67	16
A50112-561	41625	119	13
A50146-561	41625	118	20
A50407-947	41625	118	16
A50408-719	41625	118	6
A50803-059	41625	118	12
A50803-077	41625	118	19
A50803-085	41625	118	5
A50803-095	41625	118	17
A50901-016	41625	118	18
A50901-035	41625	118	4
A50901-076	41625	118	11
A6-1-2	70403	82	2
	70403	121	15
B8425EM	22337	145	9
	22337	151	9
BZV6-2RN	91929	137	4
BZ2RQ1A2	91929	120	31
B125	83008	44	
B1399	61208	60	14
B1504AP	61208	68	9
B1925EMT4-12G	22337	145	12
B1925EMT412G	22337	151	12
B2349-1	97109	116	25
B28L	51588	13	14
	51588	15	31
B33392	41625	118	22
B5301	18265	47	22
CC126	73267	5	18
CM11N02-20821	62983	30	1
CM11N02R20D8D0DD62	3	27	21
CM11N02R20D21	62983	28	4
CM11N02-20DL21	62983	29	1
CM11N02-20D21	62983	31	1
CM2N02-R25D30	62983	23	6
CM2N02-25B30	62983	26	1
CM2N02-25CL30	62983	24	1
CM2N02R25D0BCL30-6	62983	22	21
CM2N32-25D30	62983	25	1
COV2111	75272	53	4
CP68W867	70960	57	3
CR134-5-45	79960	5	
CSH6-24-11	70960	135	31
CSH8-20-16	70960	57	2
C1100-20	82484	3	1
C13375	40342	126	19
C1353	82484	113	
C1433	82484	3	45
C2348	97109	116	8
C2348-1	97109	116	12
C2349	97109	116	21
C511	82484	3	13
C541	82484	3	27
C547	82484	3	12
C977	82484	3	28
C992	82484	3	10
OCR22-1	70960	135	40
OC72N1	70960	57	6
DH103	70615	143	33
DH219	70615	143	35
D43145-3	41625	118	10
D48505	41625	120	5
D5-24V	77977	121	18
EV250	92029	17	26
EX100-170	82484	3	31
EX100-171	82484	3	50
EX100-203	82484	3	26
EX100-238	82484	3	48
EX100-239	82484	3	47
EX100-248	82484	3	33
EX678	98624	54	14
FC16500	63477	128	28
FC35201	63477	128	33
FC6019	63477	128	29
FC6431	63477	128	36
FC6434	63477	128	32
FC6435	63477	128	31
FC6446	63477	58	46
	63477	150	19
	63477	157	19
FC6859	63477	128	30
FD8020	63477	128	35
FD8021	63477	128	34
FF871TYPEA	23382	157	65

CROSS-REFERENCE TO FIGURE AND ITEM NUMBER

Reference No.	Mfg Code	Fig No.	Item No.
FFB71TYPEA	81348	150	65
FFS92TYPE1STYLE1	81348	135	20
FFW84	81348	116	
	81348	116	
FF1701	63477	128	38
FF35621	63477	128	27
F104L	82484	3	29
F105BM	82484	3	40
F105BM	82484	3	41
F1155	82484	3	55
F139	82484	3	25
F162	82484	3	20
F190	82484	3	22
F196	82484	3	24
F234LSM	82484	3	18
F234RSM	82484	3	17
F2349	71366	58	67
	71366	58	69
F254	82484	3	14
F255-1	82484	3	19
F272	82484	3	21
	82484	3	23
F273	82484	3	44
F288	82484	3	49
F319	82484	3	34
F416	82484	3	30
F50G5	45681	55	21
F5106	63477	123	24
F540	82484	3	16
F549	82484	113	
F582	82484	3	9
F608	82484	3	54
F754M	82484	3	53
F765L	82484	3	51
F765R	82484	3	52
F769NS	82484	3	46
F865	82484	3	42
GF102-5	82484	3	15
GF157	82484	3	43
GYRL400	73842	5	39
G13580	46529	52	32
G2004	46529	52	38
G2009	46529	52	39
G2022	46529	52	40
G2032	46529	52	41
G2137	46529	52	37
G2280	94431	134	
G24028	46529	52	44
G271723	77640	136	5
G326315	57733	58	131
	57733	58	131
G420460	73740	135	11
G444583	77640	136	11
G59387	46529	52	35
G62832	46529	52	36
HM624710	60038	147	39
	60038	154	39
HM624749	60038	147	38
	60038	154	38
HM903210	60038	149	41
	60038	156	40
HM903244	60038	156	39
H1038-258	30014	14	20
H1040-13A	30014	15	14
H1040-19A	30014	15	11
H1041-19A	30014	15	15
H10802A	30014	16	5
H10803A	30014	16	9
H10804A	30014	16	10
H1218	95406	5	
H1614-1B	30014	14	23
H1614-2B	30014	14	17
H1614-3B	30014	14	18
H1614-4A	30014	14	7
H1614-42A	30014	14	10
H1614-5A	30014	14	11
H1614-6A	30014	14	9
H1614-7A	30014	14	14
H1614-8A	30014	14	16
H1614-82A	30014	14	15
H1614C	30014	14	
H1615-1B	30014	13	22
H1615-2C	30014	13	
H1615-3B	30014	13	
H1615-4A	30014	13	
H1615-42A	30014	13	
H1615-5A	30014	13	
H1615-6A	30014	13	
H1615-7A	30014	13	
H1615-8A	30014	13	
H1615-82A	30014	13	
H1615C	30014	13	
H1616-1B	30014	15	
H1616-2B	30014	15	
H1616-258	30014	15	
H1616-3B	30014	15	
H1616-4A	30014	15	
H1616-42A	30014	15	
H1616-5A	30014	15	
H1616-6A	30014	15	
H1616-7A	30014	15	
H1616-8A	30014	15	
H1616-82A	30014	15	
H1616C	30014	15	
H1877	30014	16	
H1877-1A	30014	16	
H446A121	13841	137	
H446A125	13841	139	
H566-29A	30014	15	
LP1779-1	61112	49	
LP2215-10	61112	49	
LP2299-1	61112	49	
LP3239-48	61112	49	
LP3483-9	61112	49	
LP482	61112	49	
LP535	61112	48	
LR25EM	22337	145	
	22337	151	
L24CP8A10	98349	149	
	98349	156	
L24SV500A16	98349	149	
	98349	156	
L24SV5001A15	98349	149	
	98349	156	
L6NYSM22-5	70960	135	
L6NYS14-17	70960	135	
L6NYS16-18	70960	135	
L6N6	70960	135	
L6S1-3	70960	135	
L6S2-5	70960	135	
L6S3	70960	135	
MI24	92563	33	
	92563	34	
	92563	35	
	92563	38	
MI2875	74400	8	
MI2877	74400	8	
MMF829-UG10	62983	41	
MMF845UE10	62983	39	
MS11625-575	96906	58	
MS15001-1	9969	142	
MS15003-1	23382	144	
	96906	15	
	96906	33	
	96906	34	
	96906	35	
	96906	38	
	96906	40	
	96906	44	
	96906	57	
	96906	57	
	96906	66	
	96906	119	
	96906	137	
	96906	138	
	96906	149	
	96906	156	
MS15003-3	96906	85	
	96906	134	
MS15003-6	96906	44	
MS15004-2	96906	38	
MS15570-251	96906	7	
	96906	9	
	96906	9	

MS16624-231	96906	147	11
	96906	154	11
MS16624-375	96906	58	78
MS16624-78	96906	130	20
MS16625-315	96906	58	117
	96906	58	122
MS16664-125	96906	148	2
	96906	155	2
MS16664-255	96906	149	2
	96906	156	2
MS17116-4880GE	96906	8	7
MS17131-13	96906	93	17
MS17131-9	72582	92	33
MS18041-1	96906	121	7
MS19059-49	96906	147	17
	96906	154	17
MS20819-58	96906	129	32
MS20819-88	96906	129	21
MS20822-48	96906	113	53
MS24532	96906	123	17
MS24537-1	96906	125	3
MS24539-1	96906	125	5
MS24540-2	96906	123	15
MS24542-2	96906	123	18
MS24543-2	96906	123	14
MS24544-2	96906	123	16
MS24665-132	96906	4	59
	96906	5	
	96906	96	1
	96906	101	8
	96906	118	29
	96906	120	13
MS24665-353	96906	119	1
MS24665-359	96906	142	5
	96906	150	76
	96906	157	76
MS24665-360	96906	152	3
MS25231-1829	96906	123	5
	96906	123	12
MS25338-44	96906	111	
MS27152-1	96906	113	74
MS27183-14	96906	143	42
MS27183-23	96906	1	8
MS35000-3	96906	144	
MS35206-245	96906	5	
	96906	9	5
S35206-277	96906	52	34
35206-279	96906	121	8
	96906	124	12
35206-308	96906	150	41
	96906	157	41
S35207-261	96906	141	46
	96906	141	63
S35207-265	96906	8	10
	96906	9	2
MS35265-82	96906	89	3
MS35290-425	96906	143	29
MS35298-64	96906	144	1
MS35335-32	96906	141	45
	96906	141	62
MS35337-44	96906	118	35
MS35338-44	96906	88	9
	96906	88	12
	96906	89	4
	96906	89	6
	96906	89	13
	96906	92	15
	96906	96	4
	96906	96	10
	96906	101	11
	96906	103	15
MS35338-45	96906	79	7
	96906	80	9
	96906	80	22
	96906	81	2
	96906	95	5
	96906	93	2
	96906	99	9
	96906	100	4
	96906	100	12
	96906	101	17
MS35338-46	96906	111	15
MS35338-47	96906	143	47
	96906	47	2
	96906	52	28
	96906	147	7
	96906	154	7
MS35338-50	96906	8	2
	96906	54	2
	96906	136	8
	96906	142	2
	96906	144	33
	96906	147	35
	96906	150	7
	96906	154	35
	96906	157	7
MS35338-51	96906	1	7
MS35338-55	96906	58	21
MS35339-44	23382	49	48
MS35339-46	96906	144	3
MS35339-48	96906	144	6
MS35340-45	96906	127	16
MS35340-46	96906	71	3
MS35340-48	96906	58	4
	96906	134	13
	96906	143	53
	96906	144	24
	96906	146	25
	96906	147	16
	96906	148	27
	96906	150	2
	96906	152	2
	96906	153	44
	96906	154	16
	96906	155	27
	96906	157	2
MS35340-51	96906	149	31
	96906	156	30
MS35387-1	96906	8	17
MS35387-2	96906	8	17
MS35388-48	96906	8	9
MS35423-1	96906	7	1
MS35423-2	96906	7	1
MS35424-1	96906	7	1
MS35424-2	96906	7	1
MS35650-302	96906	8	8
MS35690-424	96906	2	2
	96906	116	
	96906	116	
MS35690-604	96906	5	37
MS35691-1	96906	4	10
	96906	4	19
	96906	4	24
	96906	43	1
	96906	49	30
	96906	52	13
	96906	114	6
	96906	150	21
	96906	157	21
MS35691-21	96906	4	5
	96906	49	11
	96906	49	44
	96906	58	28
	96906	71	2
	96906	116	5
	96906	116	18
	96906	120	4
	96906	143	36
MS35746	96906	112	25
	96906	113	80
MS35746-1	96906	140	4
	96906	140	7
MS35782-6	96906	82	24
MS35842-11	96906	51	1
MS35842-13	96906	4	51
	96906	52	5
MS39021	96906	124	11
MS39061-1	96906	123	20
MS39061-4	96906	123	21
MS39062-1	96906	125	11
MS39179-1	96906	113	35
	96906	113	59

CROSS-REFERENCE TO FIGURE AND ITEM NUMBER

Reference No.	Mfg Code	Fig No.	Item No.
MS39179-6	96906	112	35
	96906	113	27
MS3918	89690	112	2
MS39182-3	96906	112	31
	96906	113	10
	96906	113	19
	96906	113	48
	96906	113	76
MS39182-5	96906	112	34
	96906	112	56
	96906	113	16
	96906	113	28
MS39795-5	96906	112	33
	96906	113	22
	96906	113	75
MS40726-34	96906	5	
MS49006-8	96906	58	61
MS51071-18	96906	124	7
MS51071-20	96906	124	10
MS51113-1	96906	123	22
MS51301-1	96906	114	9
MS51303-1	96906	9	4
MS51318-1	96906	9	1
MS51330-1	96906	9	13
MS51908-8	96906	52	22
MS51967-20	96906	136	7
	96906	142	1
MS51967-8	96906	143	46
MS51968-20	96906	54	1
	96906	150	73
	96906	157	73
MS51983-4	96906	145	5
	96906	151	5
MS53017-1	96906	3	
MS53018-1	96906	113	43
MS53046-3	96906	141	38
MS53067	96906	50	
MS75004-2	96806	141	16
MS75021-2	96906	125	
MS75058-1	96906	141	6
MS75062-1	96906	112	64
MS90725-111	96906	58	3
	96906	58	132
	96906	146	24
MS90725-113	96906	144	16
MS90725-14	96906	153	43
MS90725-166	96906	150	6
MS90725-187	96906	1	6
MS90725-192	96906	44	26
MS90725-32	96906	143	60
MS90725-58	96906	51	4
MS90725-61	96906	136	21
MS90725-62	96906	139	16
	96906	143	49
MS90725166	96906	157	6
MS90726	96906	89	2
MS90726-104	96906	147	14
	96906	154	14
MS90726-111	96906	150	1
	96906	157	1
MS90726-113	96906	143	65
MS90726-115	96906	150	66
	96906	157	66
MS90726-117	96906	58	65
MS90726-123	96906	144	31
MS90726-162	96906	54	4
MS90726-29	96906	149	35
	96906	156	34
MS90726-3	96906	121	12
MS90726-32	96906	53	3
	96906	126	1
	96906	143	4
MS90726-34	96906	116	
	96906	118	26
	96906	118	42
	96906	120	9
	96906	121	6
	96906	127	3
	96906	141	35
	96906	141	55
	96906	141	71
	96906	143	26

Reference No.	Mfg Code	Fig No.	Item No.
MS90726-34	96906	144	
MS90726-6	96906	96	7
MS90725-60	96906	4	3
	96906	4	7
	96906	52	24
	96906	71	4
MS90726-62	96906	40	46
	96906	55	7
	96906	143	38
	96906	144	40
MS90726-8	96906	143	32
MS90725-87	96906	147	6
	96906	154	6
MS90727-115	96906	147	15
	96906	154	15
MS90728-51	96906	100	3
MS90728-6	96906	101	12
	96906	103	14
MS90729-72	96906	74	25
	96906	80	30
	96906	130	1
MS90728-8	96906	111	
MUB5206UM	08162	150	17
	08162	157	17
MZM08-5023	19265	45	16
M028	92563	33	21
	92563	34	16
	92563	35	9
	92563	38	17
M172	61208	67	9
M1731AF	61208	66	4
M1732J	61208	61	13
	61208	64	1
	61208	65	5
M1732W	61208	61	8
	61208	69	1
M1904BJ	61208	57	1
M1904E	61208	67	20
M1904J	61208	68	50
M1904U	61208	68	47
M1904X	61208	68	29
M1927AH	61208	61	16
M1927AK	61208	62	18
M1927AM	61208	68	10
M1927AT	61208	68	38
M1927BN	61208	61	15
M1927T	61208	68	
M1990E	61208	61	20
M1990H	61208	60	18
M2000E	61208	65	9
	61208	70	13
M2001K	61208	68	42
M2001M	61208	68	13
M2002AA	61208	62	1
	61208	63	20
	61208	68	22
M2002AG	61208	65	1
M2002BA	61208	60	1
M2002C	61208	67	26
M2002CE	61208	60	3
M2002CK	61208	61	5
M2002U	61208	60	8
	61208	62	15
	61208	64	2
	61208	65	15
M2004A	61208	63	8
	61208	63	15
M2006D	61208	68	8
M2011X	61208	68	
M201213A	61208	68	12
M201213L	61208	68	19
M201365	61208	60	2
	61208	60	9
	61208	61	6
	61208	68	23
M201399AN	61208	68	26
M2015U	61208	68	
M2016N	61208	68	
M2022M	61208	61	4
M20230	61208	63	14
M2027A8	61208	68	2
M2027S	61208	66	8

Reference No.	Mfg Code	Fig No.	Item No.
M2045S	61209	65	16
	61209	70	14
	61209	70	17
M2051AH	61209	70	1
M2051F	61209	67	32
	61209	69	15
M2051S	61209	64	7
M2059D	61209	68	28
M2060E	61209	67	18
M2073AE	61209	67	
M2073AF	61209	67	
M2074D	61209	68	18
M2074X	61209	69	3
M2090E	61209	60	23
	61209	61	1
M2090F	61209	65	10
	61209	70	11
M2090K	61209	63	12
	61209	64	5
M2167	61209	61	12
M2293	61209	68	52
M2294	61209	69	25
M2347	61209	65	13
M2531	61209	69	41
M2609-2A	92863	56	5
M2746K	61209	67	21
M2933-3	92863	18	6
M3021	92863	56	3
M3157	92863	19	4
M3157-2000-2	92863	19	7
M3157-9-20	92863	19	8
M422	61209	70	7
N09	38443	13	1
NTA4860	60380	150	36
	60380	157	36
NT162	97053	52	4
NUMX6-24-3	70960	135	29
NUJAR-20-6	70960	57	1
N03	43334	36	9
N117280V	40342	126	35
N11728N	40342	126	29
N11788	40342	112	42
N125718R	40342	126	31
N13526H	40342	112	19
	40342	112	53
N15617	40342	126	37
N15620	40342	126	39
N15621	40342	126	38
N15622	40342	126	32
N15624	40342	126	21
N15626	40342	126	20
N15627	40342	126	22
N15638	40342	126	12
N15643	40342	126	27
N156448	40342	126	25
N156608	40342	126	10
N20813A	40342	126	33
N20814A	40342	126	16
N20816C	40342	126	30
N3973F	40342	126	
N3990B	40342	126	13
N5000-150	79136	127	47
N5000-162	79136	127	26
N5000-315	79136	58	37
	79136	58	54
OMC2024-90	99103	129	4
OR325EM	2233	151	10
	22337	145	10
PC9-3361	23382	79	25
PM110	36540	17	21
P10-0784	18265	47	18
P10-0791	18265	47	26
P10-0793	18265	47	27
P10-0859	18265	47	14
P10-0861	18265	47	16
P10-0866	18265	47	25
P10-1294	18265	46	2
P10-1667	18265	47	12
P10-1670	18265	47	11
P10-1760	18265	47	13
P10-2255	18265	47	19
P10-2256	18265	47	31
P10-2870	18265	47	21
P10-5611	18265	46	3
P10-6870	18265	47	24
P1075	61209	70	19
P1080	61209	61	18
P1082	61209	61	22
P1083	61209	60	11
P1085	61209	60	22
P1092	61209	60	10
P1093	61209	60	13
P1094	61209	60	4
P11-012	67733	58	90
P11-0292	18265	47	29
P1104	61209	70	21
P1125	61209	61	29
P1129	61209	61	24
P1187	61209	67	31
P1193	61209	67	5
	61222	67	11
P1210	61209	61	26
P1211	61209	61	19
P1212	61209	61	17
P1213	61209	61	27
P16970	18265	47	7
P16972	18265	47	8
P17335	18265	47	20
	18265	47	30
P18029	18265	47	15
P18452	18265	47	10
P18464	18265	47	9
P18575	18265	47	28
P18730	18265	47	17
P5308	18265	47	23
RAX00-2325	18625	47	35
RA1	00503	43	19
RA2-4	00503	43	18
RA3-4	00503	43	13
RA4	00503	43	14
RA7-4	00503	43	17
RA7-4A	00503	43	15
RA9-4	00503	43	11
R1AH35	80535	6	9
RR175	80756	132	13
RS187	80756	132	22
R16-16SF90RC16SFRC	99103	12	1
R2-12-12FHRC12FH	99103	12	52
R2-12-12FHPC12FHRC	99103	12	53
R2-12-12FHRC12FHR9	03	11	19
R2-12-12FHRC12FH39	03	11	5
R2-16-16FHRC16FHRC	99103	12	72
R2-16-16FH90RC16F	99103	11	17
R2-16-16FH90RC16F9	03	11	16
R2-8-10FHPC10FHRC9	03	11	36
R2-8-10FH45RC10FHR	99103	12	33
R2-8-10FH90RC10FHR	99103	12	46
R32-4	00503	43	15
R59-4	00503	43	9
R74	00503	43	12
R75-4	00503	43	10
R3421	46529	52	31
SA376-24V	78383	120	21
SA4473	80533	4	5
SBG14-0041	18265	47	
SB22206S	92563	21	18
	92563	21	21
SB22210S	92563	21	24
SC016871	80063	130	5
SP6043	16764	77	8
S1082-1	82484	3	37
S1549	82484	3	39
S2224-1	82484	3	7
S2225	82484	3	36
S2254	82484	3	11
S2280	82484	3	9
S2310-20	82484	3	2
S2525EM	22337	145	11
S656	82484	3	32
S657	82484	3	39
S658	82484	3	38
TDLC22-420-2	61209	60	
TE702010-250	77540	136	28
TE703084S1	77540	136	25

Section IV. INDEX-FEDERAL STOCK NUMBER AND REFERENCE NUMBER CROSS-REFERENCE TO FIGURE AND ITEM NUMBER

Reference No.	Mfg Code	Fig No.	Item No.
TE7341J1A1-575	77640	136	18
TE705001	77640	136	14
TE7J6J01A1	77640	136	22
TE709001	77640	136	17
TE71J62	77640	136	
TRJ670	53477	145	6
	53477	151	6
T2J61	46529	52	47
T8S8-7	79960	5	
UA1469	61208	63	17
UA1475	61208	65	22
UA1476	61208	64	9
UA1477	61208	65	18
UA1478	61208	65	20
UA1479B	61208	60	5
UA1481	61208	61	
UA1482	61208	63	24
	61208	64	10
	61208	65	21
UA1483	61208	61	10
UA1485	61208	61	7
UA1488	61208	64	13
UA1674	61208	70	8
UA1702	61208	63	11
UA1739	61208	60	17
UA1879	61208	61	11
UA1899	61208	67	22
UA1908	61208	60	
UA1908A	61208	60	
UA2021	61208	67	17
UA2022	61208	67	4
UA2026	61208	66	3
UA2028	61208	66	2
UA2029	61208	66	7
UA2031	61208	66	1
UA2032	61208	66	9
UA2043	61208	64	12
UA2044	61208	67	7
	61208	67	10
UA2055	61208	67	3
UA2096	61208	61	21
UA2354	61208	70	15
UA2356A0	61208	66	6
UA2454	61208	67	14
UA3352	61208	61	25
UA3742	61208	62	2
UA3957	61208	69	1
UA3962	61208	66	5
UA4379	61208	63	23
UA4392	61208	63	18
UA4426	61208	63	22
UA4593	61208	60	12
UA4618	61208	59	7
UA4619	61208	59	5
UA4701	61208	65	2
UA4702	61208	65	3
UA4808	61208	62	19
UA4827	61208	62	9
UA4828	61208	62	8
UA4845	61208	62	10
UA4848	61208	62	6
UA4849	61208	62	7
UA4850	61208	62	
UA4861	61208	60	21
UA4862	61208	60	20
UA4870	61208	62	13
UA4871	61208	62	14
UA4872	61208	62	12
UA4873	61208	62	3
UA4874	61208	62	4
UA4999	61208	60	15
UA5054	61208	60	7
UA5078	61208	70	6
UA5079	61208	70	5
U81441	61208	61	14
U81484	61208	64	8
U81561	61208	69	6
U81614	61208	64	14
U82008	61208	69	4
U82455	61208	67	19
U83301E	61208	63	9
U83954	61208	69	7
U84170	61208	61	9
U84382	61208	68	53
U84421	61208	68	6
U84438	61208	68	4
U84554	61208	67	
U84555	61208	67	
U84556	61208	67	33
U84557	61208	67	33
U84558	61208	67	27
U84559	61208	67	27
U84560	61208	67	28
U84891	61208	62	20
UC1451	61208	70	18
UC1548	61208	65	6
UC24-1500	00503	43	8
UC24004	73740	135	
UC4173	61208	60	25
UC4372	61208	68	49
UC4378	61208	63	21
UD4434	61208	70	22
U046832	61208	65	12
UXA1474	61208	65	17
UXA4394	61208	59	4
UXA4395	61208	63	16
UXA4912	61208	70	3
UXA5093	61208	63	10
UXB4436	61208	64	4
UXB4468	61208	61	
UXB4469	61208	60	
UXB4473	61208	69	
UXB4474-1	61208	59	6
UXB4474-2	61208	59	9
UXB4474-3	61208	59	8
UXB4563	61208	67	6
UXB4564	61208	67	12
UXB4576	61208	67	
UXB4577	61208	67	
UXB4954	61208	62	17
UXC4467	61208	62	
UXC4589	61208	66	
UXC4851	61208	62	5
V20F1S11S1C8G10	62983	130	
V55D82100	81978	125	9
	81978	125	10
WAFR20-2	70960	135	41
WALH6-3	70960	135	30
WJ202616	60380	147	20
	60380	154	20
WM397	97532	5	11
WO8	38443	13	2
WS5	48170	33	1
WWO521	81348	98	2
WWN351	81348	52	10
	81348	98	3
WWP471	81348	98	1
	81348	100	6
	81348	15	23
	81348	150	23
WWP521	81348	52	11
	81348	55	32
WWP521TYPE1	81348	98	4
	81349	70	2
WO3	43334	36	10
W3400X2	79470	5	42
XR3544A	35510	71	24
XS51020	90763	5	
X13L13	43334	149	1
	43334	156	1
X206192A	61208	68	27
X206194B	61208	68	21
X208884	61208	68	30
ZZH601	81348	51	2
01-13435AH	80538	6	3
020177	77640	136	9
020190	77640	136	13
021065	77640	136	16
025031	77640	136	15
028093	73740	135	19
02820	60038	40	47
	60038	42	38
028300	73740	135	15
028336	77640	136	6

CROSS-REFERENCE TO FIGURE AND ITEM NUMBER

Reference No.	Mfg Code	Fig No.	Item No.
028336	77640	136	10
02877	60038	40	46
	60038	42	39
029066	73740	135	16
032074	77640	136	29
032156	73740	135	12
032223	77640	136	23
032262	73740	135	27
033036	77640	136	24
033037	77640	136	24
033150	77640	136	19
034059	73740	135	13
037014	77640	136	12
042031	77640	149	19
044952	77640	136	20
0503-6-8	45681	129	30
063024	73740	135	21
063983	73740	135	17
	73740	135	25
069013	77640	136	30
075001	73740	135	26
08680	95142	45	5
089154A1-1400	73740	135	23
095230A1-1056	73740	135	24
1-X40X360EG	24161	71	1
1-1-2-12	30014	15	24
1-1-2X12	30014	13	7
1-14	30014	14	6
1-2-20	94431	134	12
1-2-20X1-1-2	30014	14	5
1-2-20X2-3-4	94431	134	14
1-2X360EGX61-1-2	24161	79	1
1-390667-2	04618	123	13
1-4	30014	15	21
1-8X3	94431	134	2
	94431	134	32
187123	24617	116	10
	24617	116	23
1E15P12T12G30S52	96259	11	25
1E16P16T12G30S	96259	11	41
1HP146	73287	37	1
10	94431	132	9
10-32	94431	132	8
10-32X1	98624	54	16
10-5323	04700	44	
10BTX	45681	129	14
10FTX	45681	112	13
10HTX	45681	129	23
10TXCS	45681	129	15
10084	81343	129	2
10000106	23382	114	5
10000152	23382	113	42
10000180	23382	112	38
10000278	23382	113	15
	23382	113	83
10000032	23382	113	34
10000320	23382	3	3
10000351	23382	113	63
10000472	23382	112	10
10000475	23382	112	23
10000487	23382	112	9
10000488	23382	113	46
	882	112	15
10000572	23382	58	85
10001507	23382	53	10
1000519	23382	150	56
	23382	157	56
1000520	23382	147	27
	23382	154	27
1000521	23382	58	16
	23382	58	92
	23382	58	109
1000641	23382	141	10
	23382	141	20
	23382	141	26
	23382	141	31
1000710	23382	54	8
10027	23382	112	27
	23382	113	39
100523A	40342	126	7
100524A	40342	126	7
101	98624	54	11

Reference No.	Mfg Code	Fig No.	Item No.
10100020	23382	71	18
10100181	23382	53	18
10100327	23382	141	8
	23382	141	18
	23382	141	25
	23382	141	28
10100328	23382	141	19
	23382	141	29
10100573	23382	55	25
10100574	23382	129	11
10125061	23382	113	81
10130003	23382	113	12
10130069	23382	112	63
10130488	23382	153	
10130498	23382	153	4
10165149	23382	118	30
	23382	120	14
1017021	23382	4	72
10275013	23382	120	32
	23382	144	11
10275060	23382	118	3
	23382	118	7
102835	62983	39	24
103321	72582	73	7
	72582	74	2
	72582	74	24
	72582	74	40
	72582	76	3
	72582	76	21
	72582	79	29
	72582	79	35
	72582	80	2
	72582	80	12
	72582	80	31
	72582	88	5
	72582	91	10
	72582	92	3
	72582	95	7
	72582	99	5
	72582	99	11
	72582	101	4
	72582	104	4
	72582	105	4
	72582	111	8
	72582	111	27
	72582	130	2
103322	72582	75	10
	72582	75	3
	72582	79	11
	72582	79	31
103323	72582	85	9
	72582	130	29
103325	72582	77	2
103340	72582	99	2
103341	72582	73	8
	72582	76	22
	72582	79	36
	72582	99	6
	72582	99	12
	72582	101	5
	72582	101	26
	72582	111	20
	72582	111	28
1034K1	77640	136	24
1036Y7	72582	100	5
103647	72582	74	12
	72582	74	32
1037	13841	33	10
103869	72582	98	7
103878	72582	74	29
	72582	111	45
103879	72582	74	6
103880	72582	91	13
	72582	98	6
103893	16764	78	15
103904	72582	93	10
	72582	93	19
105-75014	23382	45	1
	23382	45	3
1050	62983	23	15
	62983	24	9
	62983	25	6

Reference No.	Mfg Code	Fig No.	Item No.
1050	62983	26	6
105451	72582	111	21
106100060613	46522	122	1
10615035	23382	113	54
	23382	113	70
10615037	23382	113	55
	23382	113	71
10615038	23382	113	45
10615044	23382	55	31
10615046	23382	55	14
10615047	23382	55	15
10615083	23382	53	11
10615085	23382	113	41
10615110	23382	55	26
10615139	23382	55	42
10615169	23382	55	4
	23382	55	29
10615228	23382	113	65
	23382	113	72
10615239	23382	55	6
	23382	113	56
10615250	23382	55	20
10615318	23382	129	7
10615343	23382	129	39
10615602	23382	55	19
10660	98624	54	5
108207	23382	145	
108208	23382	151	
108212	23382	58	
10853	13841	20	9
10854	13841	20	10
10858	13841	21	12
10865	13841	137	11
	13841	138	4
109004	23382	58	96
10929868	00000	71	25
109975	62983	130	19
11-101-001	43990	113	64
11-12	99103	12	28
11-6	99103	12	95
11-6-12-10	99103	12	65
110-143	24234	4	53
1108	30327	140	6
1108	13841	10	32
	13841	10	36
1109	13841	38	13
111	80813	22	12
1113940	16764	77	
11154	13841	21	2
11155	13841	17	7
11156	13841	17	6
1115842	16764	125	7
11161	13841	21	4
111610	72582	92	4
11163	62983	19	3
1118091	72582	101	15
1118191	16764	89	11
11188	13841	42	5
11191	13841	17	28
1124	13841	1	1
112500	23382	148	7
	23382	148	14
	23382	155	7
	23382	155	14
112513	23382	149	16
	23382	149	21
	23382	156	16
	23382	156	19
11255	13841	40	18
	13841	42	4
1126	13841	1	3
112694	62983	23	20
	62983	24	17
	62983	25	11
	62983	26	11
11279	13841	17	14
11280	13841	17	16
114050	23382	129	3
114052	23382	129	6
114544	72582	94	2
114783	72582	96	2
11578	13841	44	5
11580	13841	44	7
116337	72582	92	46
1167	13841	137	1
1170	13841	8	1
117062	72582	74	1
	72582	74	23
	72582	111	26
1171	13841	43	5
1172	13841	33	5
1173	13841	38	1
11741	13841	17	10
117506	62983	41	22
117507	62983	41	23
11762	13841	44	8
1177	13841	44	24
117717	62983	28	23
	62983	29	16
	62983	30	16
	62983	31	16
1181	13841	34	11
	13841	35	4
118102	23382	55	34
1187	13841	36	1
118757	72582	92	30
118982	62983	19	32
12-16JMS	70434	55	23
12-8CTXS	45681	53	19
120005	23382	119	2
120217	72582	73	3
120233	24617	21	10
120370	60703	2	16
120380	72582	101	21
120392	72582	101	22
12041	13841	42	28
12046	13841	40	51
12056	13841	42	43
12059	13841	38	5
120613	24617	99	10
12063	13841	13	23
12075	13841	20	4
12077	13841	20	6
	13841	21	20
120786	62983	39	5
	62983	39	34
	62983	41	7
	62983	41	30
1208	78189	5	
12082	73740	135	6
12094	13841	40	44
	13841	42	36
121F432-24V	77977	121	19
121091	23382	52	29
12116	13841	42	32
12119	13841	40	40
12120	13841	40	17
121208	00000	113	32
121574	13841	20	11
	24617	20	8
121917	72582	85	4
	72582	96	20
121926	72582	101	20
122	30014	15	12
	30014	15	16
	94431	132	7
	94431	133	7
122-614	23382	150	4
	23382	157	4
122072	23382	58	2
122161	72582	92	40
122198	72582	89	1
122366	72582	76	12
122408	72582	130	28
122546	62983	22	10
122559	23382	58	126
123179	72582	101	10
123221	77582	88	2
124546	72582	90	14
1248	62983	23	11
	62983	25	2
	62983	26	2
12493	73740	135	8
12496	73740	135	10

Reference No.	Mfg Code	Fig No.	Item No.
12497	73740	135	5
1250	62983	24	2
125249	23382	58	97
125292	23382	59	70
	23382	58	76
125295	23382	58	91
125298	23382	59	26
1253	35510	72	51
125615	23382	58	62
125617	23382	58	9
125654	23382	58	74
125840	23382	144	42
12613	24617	101	13
126911	62983	39	12
1269579	86403	135	44
127388	23382	4	4
127559	72582	109	6
1289	13841	40	38
	13841	42	26
	13341	116	9
	13841	116	22
1298	13841	137	2
12981	23382	59	84
1302	13841	10	3
	13841	10	11
	13841	10	22
	13841	10	29
1303	13841	10	19
	13841	10	25
1304	13841	10	19
131048	24617	38	2
131050	24617	33	13
131486	62983	130	15
1315	13841	15	5
1316	62983	41	4
1317-4	30014	14	
132908	72582	73	4
1333	13841	16	3
	13841	38	28
134125	23382	112	1
134129	23382	55	9
134131	23382	55	11
134142	23382	112	7
134158	23382	5	
134169	23382	129	22
134170	23382	113	38
134171	23382	129	9
134172	23382	129	28
134173	23382	129	27
134174	23382	129	24
134175	23382	129	34
134176	23382	129	35
134188	23382	55	10
134189	23382	112	5
134190	23382	112	6
134191	23382	53	5
	23382	55	13
	23382	76	1
134192	23382	53	6
134193	23382	53	7
1346	13841	40	4
1349	13841	6	1
1350	13841	40	34
	13841	42	22
135079	23382	125	
13548	80201	21	28
1356	62983	39	4
13622	35510	72	17
13624	35510	72	18
13630	80201	40	45
	80201	42	37
136751	23382	123	2
136752	23382	123	3
136756	23382	123	4
136846	23382	125	
136847	23382	125	
136848	23382	125	
136849	23382	125	
136850	23382	125	
136851	23382	141	27
136852	23382	141	17
136853	23382	141	24

Reference No.	Mfg Code	Fig No.	Item No.
136854	23382	141	7
136855	19207	125	
136856	23382	125	
136857	23382	125	
136858	23382	125	
136859	23382	125	
136860	23382	125	
136861	23382	125	
136998	23382	125	
136999	23382	123	6
137000	23382	121	16
137004	23382	123	9
137005	23382	123	10
137006	23382	123	7
137007	23382	123	8
137009	23382	123	11
137421	72582	111	43
137423	72582	73	15
137425	72582	82	28
138090	23382	112	8
	23382	113	2
138091	23382	113	5
138092	23382	113	3
138093	23382	55	7
	23382	113	4
138094	23382	113	1
138103	23882	55	5
138117	23382	140	5
138125	23382	129	5
	23382	129	17
138127	23382	53	8
138275	23382	55	22
138276	23382	55	17
138277	23382	55	12
14X1172	40342	126	17
1410M	21760	58	19
141242	72582	92	53
	72582	102	21
141245	72582	111	49
14132	00736	17	25
142269	72582	82	33
142486	72582	96	14
142583	72582	92	29
14278	13841	42	10
14281	13341	40	49
	13841	42	40
14282	13841	40	48
	13841	42	41
14347	41226	49	18
143992	72582	93	13
145067	72582	105	11
1454	62983	29	1
1458	62983	23	1
147	94431	134	6
148148	72582	92	29
1503536	72582	74	29
1507667	70040	125	8
	72582	74	19
1508696	70040	125	4
151-20324-2	64294	131	15
151-21439	64294	131	9
151-22608	64294	131	3
151-23413	64294	131	14
151-24429	64294	131	18
151-24829	64294	131	15
	64294	131	17
151-25059	64294	131	11
151-32739-9	64294	131	27
151-32740	64294	131	12
151-32741	64294	131	6
151-32742	64294	131	4
151-32743	64294	131	10
151-33034	64294	131	24
151-33035	64294	131	23
151-33036	64294	131	22
151-33037	64294	131	21
151-33038	64294	131	19
151-33039	64294	131	20
1514371	70040	125	2
152-32739-44	64294	131	
152-33033	64294	131	13
154009	62983	29	22

Section IV. INDEX-FEDERAL STOCK NUMBER AND REFERENCE NUMBER CROSS-REFERENCE TO FIGURE AND ITEM NUMBER

Reference No.	Mfg Code	Fig No.	Item No.
154008	62983	29	15
	62983	30	15
	62983	31	15
154010	62983	23	19
	62983	24	16
	62983	25	10
	62983	26	10
154018	62983	23	13
	62983	24	7
	62983	25	4
	62983	26	4
154078	62983	19	15
154084	62983	19	28
154090	62983	130	16
154092	62983	19	14
154095	62983	19	12
154098	62983	19	29
154101	62983	19	31
154129	62983	28	10
	62983	41	29
154131	62983	39	33
155023	62983	130	11
1561509	72582	85	3
1565192	72582	85	2
156736	23382	57	
158-15	30226	139	3
158-34A	30226	139	2
158H4	30226	139	8
158J1A	30226	139	4
158K	30226	139	9
158610	23382	52	21
159D1	30226	139	1
16-13	30014	13	17
16-21	30014	14	13
16-25	30014	15	34
	30014	16	6
160-1	30226	139	5
160A	30226	139	7
160S	30226	139	6
160515	23382	4	67
	23382	143	16
160521	23382	52	16
	23382	124	5
161069	23382	143	6
161146	23382	120	11
16128	70960	135	34
161515	23382	4	56
	23382	4	64
	23382	5	
162092	23382	120	41
162096	23382	120	42
162108	23382	120	37
162134	23382	3	5
	23382	49	36
162135	23382	4	31
162136	23382	52	20
162306	23382	4	21
	23382	43	3
162415	23382	143	34
163781	95879	132	3
164325	23382	148	26
	23382	155	26
164381	23382	149	30
	23382	156	29
164417	23382	144	38
	23382	145	1
	23382	151	1
164432	62983	39	35
	62983	41	31
164460	23382	58	80
164604	23382	3	6
	23382	4	55
	23382	4	63
	23382	4	68
	23382	5	
	23382	49	35
	23382	52	17
164656	23382	120	40
165007	23382	143	43
165016	23382	65	14
165150	23382	141	13
165154	23382	150	42
165154	23382	157	42
165178	23382	58	110
165283	23382	152	5
165285	23382	47	3
165291	23382	49	13
165519	23382	150	75
	23382	157	75
165534	23382	149	15
	23382	156	15
1656	62983	28	26
	62983	29	19
	62983	31	19
165679	23382	147	28
	23382	154	28
165683	9233	147	34
	23382	154	34
165693	23382	149	27
	23382	156	26
165729	23382	150	57
	23382	157	57
165730	23382	150	58
	23382	157	58
165732	23382	150	52
	23382	157	52
165748	23382	145	3
	23382	151	3
165771	23382	148	8
	23382	148	15
	23382	155	8
	23382	155	15
165778	23382	144	40
165780	23382	149	28
	23382	156	27
165847	23382	149	32
	23382	156	31
1662	08805	8	13
16662	62983	130	24
1683	08806	4	16
17100	13841	10	46
17101	13841	10	37
17102	13841	10	33
17104	13841	20	3
171042	23382	58	135
17110	13841	21	29
17111	13841	21	17
17112	13841	21	8
17113	13841	21	19
17114	13841	21	25
17115	13841	21	22
17117	13841	20	12
17118	13841	20	5
17119	13841	21	14
17120	13841	21	15
17121	13841	21	9
17122	13841	21	11
17126	13841	44	4
17132	13841	42	30
17134	13841	42	31
17143	13841	22	13
17153	13841	12	61
17154	13841	12	73
171545	62983	30	23
17167	13841	32	5
17168	13841	124	4
17170	13841	10	23
17171	13841	10	16
17172	13841	10	20
17173	13841	10	26
17174	13841	10	4
17175	13841	10	12
17176	13841	10	29
17177	13841	10	8
17182	13841	137	15
	13841	138	8
17183	13841	137	13
	13841	138	6
17185	13841	138	7
17191	13841	137	16
	13841	138	6
1770	13841	36	4
1770005	97532	5	1
1770039	97532	5	3

Reference No.	Mfg Code	Fig No.	Item No.
1770040	97532	5	35
1770072	97532	5	13
1770082	97532	5	36
1770091	97532	5	12
1770108	97532	5	44
1770178	97532	5	30
1770290	97532	5	4
1770293	97532	5	14
1774	23382	4	58
	23382	118	1
1777	13841	21	6
1778	13841	9	9
	13841	10	7
	13841	10	15
	13841	10	40
	13841	40	8
	13841	42	13
	13841	44	9
177988	62983	39	26
1783	13841	32	3
1786	13841	32	4
1791	13841	42	8
1795	13841	17	29
1796	13841	20	1
	13841	27	3
	13841	40	23
	13841	40	29
	13841	42	17
1797	13841	43	23
1798	13841	27	3
179819	72582	100	11
179826	72582	105	8
179827	72582	99	7
179837	72582	99	4
	72582	99	10
179839	72582	73	6
	72582	95	6
	72582	111	7
179846	72582	101	3
179848	72582	104	3
179849	72582	91	6
	72582	102	7
	72582	105	1
179850	72582	79	34
	72582	91	7
	72582	92	2
179857	72582	85	10
	72582	130	26
179864	72582	79	30
179867	72582	75	2
179882	72582	85	8
1799	13841	38	21
180121	72582	74	39
	72582	111	29
180122	24617	58	22
180130	72582	97	1
180147	72582	75	0
180520	23382	144	15
1811	13841	17	19
	13841	37	7
1813	13841	17	11
181360	72582	110	5
1816	13841	22	7
	13841	41	3
1836	14370	143	28
1838	13841	42	1
1840	13841	38	8
184197	62983	23	8
1851	13841	32	1
1852	13841	15	3
	13841	22	1
	13841	33	8
	13841	38	19
1854	13841	17	17
	13841	22	5
	13841	37	5
	13841	41	1
1855	13841	16	1
	13841	38	26
1856	13841	33	3
	13841	34	8
	13841	35	1

Reference No.	Mfg Code	Fig No.	Item No.
1856	13841	40	2
	13841	44	21
1859	13841	33	12
1861791	16764	78	12
196293	72582	101	1
	72582	105	2
186285	72582	105	3
186289	72582	90	2
186309	72582	91	9
196311	72582	88	6
186580	62983	28	9
	62983	41	28
186612	72582	101	2
	72582	104	2
196618	72582	80	21
	72582	111	15
196619	72582	74	3
	72582	80	29
186622	72582	80	1
186625	72582	79	6
	72582	80	8
	72582	91	1
186627	72582	99	16
	72582	111	19
186628	72582	76	20
	72582	104	1
186630	72582	96	3
186647	72582	89	12
186648	72582	101	16
196725	72582	111	9
187000	62983	28	15
	62983	29	8
	62983	30	8
	62983	31	8
187087	62983	39	32
187123	23382	4	6
	24617	6	2
19718	13841	34	3
1374	13841	1	2
1377	13841	34	2
18782	13841	40	
18783	13841	40	16
18784	13841	40	41
18785	13841	40	43
18786	13841	40	27
18787	13841	40	55
18788	13841	40	52
1879	13841	33	14
18790	13841	44	31
18792	13841	37	8
18793	13841	37	9
19795	13841	137	18
18799	13841	1	12
18800	13841	1	11
18802	13841	1	4
18803	13841	42	29
1881	13841	37	4
19815	13841	42	11
18816	13841	42	35
18817	13841	38	29
19818	13841	38	24
19819	13841	42	33
18820	13841	42	
18821	13841	138	11
18822	13841	137	9
	13841	138	2
18824	13841	137	17
	13841	138	10
18825	13841	15	7
18847	13841	44	6
18848	13841	44	27
1885	13841	10	2
	13841	10	6
	13841	10	10
	13841	10	14
	13841	10	39
	13841	21	7
	13841	36	5
	13841	40	9
	13841	42	14
	13841	44	10
	13841	124	2

CROSS-REFERENCE TO FIGURE AND ITEM NUMBER

Reference No.	Mfg Code	Fig No.	Item No.
18859	35510	72	63
1886	13841	32	2
1887	13841	15	4
	13841	20	2
	13841	21	13
	13841	22	2
	13841	27	2
	13941	33	9
	13941	36	2
	13841	38	20
	13841	40	24
	13841	40	30
	13841	42	9
	13841	42	18
	13841	43	24
1888	13841	40	35
	13841	42	23
18880	13841	34	7
18881	13841	35	
1888135	16764	5	
1889	13841	17	12
	13841	17	18
	13841	22	6
	13841	37	6
	13841	38	9
	13841	40	6
	13841	41	2
1890	13841	16	2
	13841	19	2
	13841	38	14
	13841	38	27
	13841	137	12
	13841	138	5
18902	13841	44	33
18909	13841	40	28
1891	13841	33	4
	13841	34	9
	13841	35	2
	13841	40	3
	13841	42	2
	13841	44	23
	13841	44	28
18911	13841	44	30
18912	13841	17	33
18913	13841	17	31
18914	13841	17	20
18917	13841	44	32
189691	72582	81	8
19000	13841	10	41
19002	13841	10	45
19003	13841	44	11
19004	13841	44	12
19005	13841	22	13
19006	13841	27	9
19007	13841	27	8
19008	13841	27	10
19012	13841	27	11
19013	13841	27	12
19014	13841	27	13
19015	13841	27	14
19020	13841	43	22
190204	72582	96	22
19021	13841	12	6
19026	13841	12	6
1903711	16764	5	
190500	23382	49	23
	23382	49	28
190501	23382	49	24
190502	23382	49	25
1910SZ	76062	21	23
1911	23382	5	
	23382	120	36
1911644	16764	77	30
191249	72582	80	11
	72582	91	8
1913086	16764	78	11
1913534	16764	77	52
1913960	16764	77	47
1914	13841	40	37
	13841	42	25
1914107	16764	78	10
1914373	16764	77	25
1914647	16764	77	45
	16764	78	6
1914648	16764	78	4
1914842	16764	77	42
1914869	16764	77	31
	16764	77	40
191499	23382	144	14
	23382	144	29
191514	23392	144	13
	23382	144	21
	23392	144	27
191658	23382	125	
	23382	141	32
1918	13841	43	21
1918047	16764	77	34
1918687	16764	78	7
1918690	16764	78	9
192090	23382	143	27
1921805	16764	77	26
19233	13841	33	22
	13941	34	17
	13841	35	10
1923484	16964	77	35
19235	13941	34	10
	13841	35	3
19242	13841	38	18
19246	80201	40	53
	90201	42	45
19250	13841	34	6
192857	23382	52	1
1930	93879	44	14
1930611	16764	77	6
193144	62983	19	34
193220	62983	19	36
19336	13841	15	2
193428	62983	19	37
1937116	16764	77	49
1938446	16764	77	46
1940	13841	19	1
	57733	150	
	57733	157	
1940006	16764	77	36
194025	62983	41	11
19427	13841	34	14
	13841	35	7
1945356	16764	77	14
1945484	16764	77	28
1945496	16764	77	50
1945499	16764	77	51
1945500	16764	77	43
1945509	16764	77	12
194607	23382	150	32
	23382	157	32
194608	23382	58	43
1946407	16764	78	2
194647	23382	58	44
1947920	16764	77	29
19480	13841	38	23
1948507	16764	77	7
1948512	16764	77	39
1948513	16764	77	38
1948515	16764	78	13
1948518	16764	78	14
1948519	16764	77	21
1948520	16764	77	19
1948521	16764	77	18
1948522	16764	77	20
1948526	16764	77	17
1948529	16764	77	27
1948536	16764	77	10
1948537	16764	77	9
1948538	16764	77	13
194878	62983	41	26
1949618	16764	77	22
194984	23382	4	22
194997	23382	4	35
19504	13841	40	10
	13841	42	15
19509	13841	42	21
1951078	16764	77	33
195163	23382	149	42
	23382	156	41

Section IV. INDEX-FEDERAL STOCK NUMBER AND REFERENCE NUMBER CROSS-REFERENCE TO FIGURE AND ITEM NUMBER

Reference No.	Mfg Code	Fig No.	Item No.
1053236	16764	77	3
105376	23382	149	26
	23382	156	25
19556	13841	42	16
1955999	16764	77	53
1957847	16764	77	11
19587	13841	40	12
195903	23382	120	34
1964	13841	43	42
	13841	42	34
1964857	16764	77	15
1967	23382	141	41
19763	13841	14	3
197691	23382	3	4
	23382	114	4
197692	23382	112	37
	23382	113	6
197693	23382	112	21
	23382	129	29
197695	9233	113	7
	23382	112	32
197696	23382	112	52
	23382	113	30
	23382	129	12
197697	23382	129	18
197698	23382	55	16
1995	13841	17	27
198625	23382	141	43
198891	23382	5	1
198971	23382	148	9
	23382	148	16
	23382	155	9
	23382	155	16
199050	23382	112	47
199197	23382	113	36
199277	23382	70	
199431	23382	112	29
199432	23382	112	28
199463	23382	117	1
1996097	24617	123	19
1997027	16764	121	13
1998	13841	21	3
	13841	40	22
199857	23382	48	
199935	23382	118	33
2-1-2X3A8	30014	16	8
2-113	45681	134	23
2-14N219-7	45681	134	24
2-228	45681	132	16
2-246	45681	150	30
	45681	157	30
2INE064	72962	4	1
2X5505	40342	126	11
2X5515	40342	126	36
2X64	40342	126	8
	40342	126	14
20L	51588	14	19
200009A	40342	126	40
200010A	40342	126	34
200054	06853	146	7
200465	62993	19	38
2005	13841	40	20
	13841	42	3
2013410E	61208	68	37
201438	06853	152	7
20180	13841	40	32
20181	13841	40	36
20182	13841	40	39
201821	61208	68	48
20184	13841	42	44
201902	23382	5	
201951	61208	68	43
202233A	61208	68	
2022348	61208	68	39
20224	13841	1	10
202299	61208	67	24
20231	13841	34	18
20232	13811	40	1
20235	13841	42	47
20236	13841	42	20
20242	13841	40	15
202444	61208	55	1
202451	61208	68	
20246	13841	13	24
20249	13841	36	4
20250	13841	36	3
20251	13841	14	2
20254	13841	38	12
20255	13841	36	10
20256	13841	38	15
20257	13841	13	25
20258	13841	13	4
20259	13841	13	3
20262	13841	35	11
20263	13841	33	15
20264	13841	33	18
20265	13841	33	6
20266	13841	33	11
20267	13841	33	19
20269	13841	37	2
20270	13841	44	10
20271	13841	8	3
202776	61208	55	2
20279	13841	40	13
20281	13841	43	6
20282	13841	43	20
20283	9138	43	7
20289	13841	33	7
202926	06853	84	2
202979	06853	127	15
202986	06853	146	3
	06853	153	2
203019	06853	146	6
20319	13841	33	2
203414	06853	127	23
2036768	61208	68	3
203684A	61208	68	5
2037	23382	63	4
203785A	61208	68	24
203787A	61208	58	
2038-4-8	01276	112	16
	01276	113	9
203803	61208	68	35
203897	61208	68	
20429	13841	15	18
204445	23382	4	36
204781	06853	146	2
	06853	153	1
	06853	153	5
205-33	71741	4	42
205103	06853	112	41
	06853	113	23
205177	06853	112	45
205183	06853	112	4
	06853	112	40
	06853	113	44
20525	13841	36	13
20526	13841	35	3
205266	23382	4	30
20527	13841	36	14
205465	06853	113	[illegible]
205509	06853	112	50
205522	06853	112	50
	06853	113	[illegible]
205539	06853	113	52
206086	62993	23	17
	62993	24	13
	62993	25	9
	62993	24	8
206184	61208	68	20
206185	61208	55	
206187A	61208	58	14
206192A	61208	60	
206193A	61208	60	
206194A	61208	60	
206195A	61208	60	
206303	61208	65	36
206309	61208	67	30
206310	61208	55	44
206772	62993	23	14
	62993	24	14
	62993	25	7
	62993	26	6
2088820	61208	60	14
208884	61208	60	

Reference No.	Mfg Code	Fig No.	Item No.
208886B	61208	68	44
208887	61208	68	32
208894	61208	68	40
209051B	72582	96	11
21FK820	56878	134	9
	56878	134	17
21NE108	72962	144	8
	72962	144	19
210	30014	15	13
210067	06853	127	5
210468	06853	83	12
210492	06853	127	8
210897	06853	83	20
2109	94431	134	4
2112253	97532	5	34
2112313	97532	5	32
2112573	97532	5	15
211347	06853	84	3
21137	13841	40	33
211376	06853	84	1
2113863	97532	5	41
21139	13841	17	32
2123393	97532	5	45
2123411	97532	5	38
2123423	97532	5	40
212647	62983	19	39
2129101	97532	5	8
213042	06853	112	14
2131	94431	134	18
2143	94431	134	15
214526	06853	152	8
2147	94431	134	7
214745	06853	127	43
2147511	97532	5	27
2147533	97532	5	21
2147543	97532	5	22
2147553	97532	5	23
2148	94431	134	10
2149	94431	134	3
2150	94431	134	5
2152	94431	134	11
2155	94431	134	16
2157A	94431	134	20
215703	06853	112	55
2157781	97532	5	47
2157791	97532	5	46
2157813	97532	5	20
2157853	97532	5	25
2158143	97532	5	5
2158144	97532	5	6
2159361	97532	5	9
2161601	97532	5	10
216310	06853	112	54
21699	13841	37	10
2173	94431	134	26
217691	06853	113	31
21798	13841	38	32
21799	13841	44	
218	98624	54	12
218217	72582	110	3
	72582	110	9
2197	62983	27	15
22013-24	99103	12	5
	99103	12	22
22013-27	99103	12	13
	99103	12	25
22014-15	99103	12	19
22014-6	99103	11	43
22082	35510	71	27
2214	70485	143	28
222	30014	13	11
	30014	14	8
	30014	15	28
22215	23382	144	12
222640	62983	28	24
	62983	29	17
223065	72582	93	14
223157	62983	28	2
223388	62983	28	25
	62983	29	18
	62983	31	18
223489	62983	28	8
223489	62983	29	5
	62983	30	5
	62983	31	5
223493	62983	28	7
	62983	29	4
	62983	30	4
	62983	31	4
224318	06853	113	57
22456	13841	17	9
225733	06853	152	15
225902	06853	152	17
225943	06853	152	19
225948	06853	146	23
226103	06853	84	7
226153	13841	116	26
226157	62983	23	4
226161	62983	28	6
	62983	29	3
	62983	30	3
	62983	31	3
226163	62983	23	5
226173	06853	152	6
226393	72582	97	24
22640	62983	30	17
	62983	31	17
226503	06853	116	13
226834	06853	127	7
226835	06853	127	11
227453	06853	83	10
227744	06853	153	25
227745	06853	153	19
228233	06853	83	30
228238	06853	83	23
228280	06853	152	11
228790	06853	146	5
229084	06853	84	10
229235	62983	130	23
229636	06853	113	61
229662	62983	19	6
229813	06853	112	48
	06853	113	14
229875	06853	83	28
230111	06853	152	10
230189	62983	19	18
230576	06853	83	1
230920	06853	84	26
230935	06853	83	13
2313	35510	72	3
	35510	72	44
231532	62983	19	4
232	30014	14	12
232798	63977	130	10
232799	62983	28	12
232850	06853	83	7
233	94431	132	6
	94431	133	6
233057	06853	83	2
233410	06853	82	12
23382	6577	112	46
233835	06853	153	6
234	94431	132	5
	94431	133	5
23402	13841	36	6
23403	13841	36	11
23404	13841	36	8
234045	06853	127	52
234433	06853	152	16
234435	06853	152	18
234810	06853	84	5
234811	06853	84	4
235415	62983	24	5
235416	06853	83	22
	62983	24	3
235425	06853	84	27
23604-48	99103	12	18
23612	73740	135	7
236125	06853	83	19
236126	06853	83	8
236167	06853	84	9
236168	06853	84	8
236169	06853	84	6
236170	06853	83	3

CROSS-REFERENCE TO FIGURE AND ITEM NUMBER

Reference No.	Mfg Code	Fig No.	Item No.
236215	06853	83	11
236288	06853	127	10
236577	06853	83	4
236676	06853	112	12
23674-15	99103	12	4
23674-20	99103	12	12
	99103	12	24
23674-32	99103	11	42
236979	06853	127	17
236980	06853	127	14
236981	06853	127	13
236982	06853	127	12
237291	06853	83	14
237315	06853	84	23
237395	06853	84	30
237648	06853	84	17
	06853	84	24
	06853	127	24
237686	06853	83	21
237687	06853	84	16
237695	06853	83	17
237696	06853	83	5
237736	62983	28	5
	62983	29	2
	62983	30	2
	62983	31	2
237824	62983	24	11
237886	06853	146	17
	06853	153	21
	06853	153	27
237390	06853	153	28
237891	06853	153	22
237936	06853	83	6
238085	6293	24	4
238373	06853	152	14
238379	06853	115	2
	06853	115	7
238472	62983	41	27
238474	06853	127	9
238482	62983	41	24
238487	62983	41	10
238491	06853	83	29
2385	35510	72	4
	35510	72	39
238594	06853	84	14
238595	06853	84	13
238596	13841	84	12
238597	06853	84	15
238598	06853	84	11
238634	06853	83	9
238780	62983	41	14
238807	06853	116	4
	06853	116	16
238834	62983	23	9
238836	62983	41	17
238888	06853	127	6
238956	06853	50	4
2390	23332	58	133
239071	06853	50	7
239136	06853	127	35
239139	06853	50	9
39189	06853	84	19
239219	06853	127	31
	06853	127	48
39335	62983	41	21
39357	06853	115	4
	06853	115	9
39395	06853	83	18
39643	06853	127	20
	06853	127	42
239668	06853	127	19
239766	62983	130	9
239943	06853	127	28
239972	06853	83	25
24-343	77977	121	20
240011	06853	112	
240022	06853	83	26
240023	06853	83	27
240024	06853	83	24
240142	06853	83	16
240143	06853	83	15
240347	06853	82	11

Reference No.	Mfg Code	Fig No.	Item No.
240576	06853	84	18
240920	06853	115	3
241054	06853	84	22
241504	62983	39	25
241541	62983	39	19
241543	62983	39	22
241548	62983	39	10
241993	06853	153	32
241995	06853	153	30
241996	06853	153	18
241997	06853	153	38
241999	06853	153	36
242000	06853	153	16
242001	06853	153	15
242002	06853	153	14
242003	06853	153	12
242004	06853	153	13
242008	06853	153	29
242009	06853	153	31
242010	06853	153	24
242018	06853	146	19
242022	06853	153	7
242074	62983	23	21
	62983	25	12
	62983	26	12
242075	62983	23	23
	62983	24	20
	62983	25	14
242076	62983	23	14
	62983	24	8
	62983	25	5
	62983	26	5
242079	62983	23	16
	62983	24	10
	62983	25	7
	62983	26	7
242094	62983	23	2
242141	06853	50	10
242228	06853	127	27
242396	06853	146	10
	06853	152	13
242398	06853	153	33
2424	98524	54	10
242406	06853	115	10
242413	06853	153	35
242789	62983	23	22
	62983	24	19
	62983	25	13
2428	13841	14	1
242837	06853	112	
243023	06853	153	9
243053	06853	84	25
243062	06853	115	8
2431	13841	34	5
243384	06853	146	22
2434	35510	72	40
2436	13841	37	3
243682	06853	153	11
24391	13841	44	22
243937	06853	50	6
243939	06853	50	8
243940	06853	50	5
243973	06853	127	45
244169	06853	153	37
244265	06853	153	40
244432	06853	127	58
244434	06853	127	56
244435	06853	127	55
244436	06853	127	37
244437	06853	127	54
244438	06853	127	53
244439	06853	127	51
244441	06853	127	44
244442	06853	127	46
244443	06853	127	57
244444	06853	127	41
244445	06853	127	40
244446	06853	127	25
244447	06853	127	39
244448	06853	127	38
244449	06853	127	36
244450	06853	127	34

Reference No.	Mfg Code	Fig No.	Item No.
244453	06853	127	22
244461	06853	84	29
244927	06853	153	
244931	62983	41	12
24497	13841	40	26
	13841	42	12
24499	13841	42	7
245482	62983	27	4
245497	62983	27	5
246017	62983	39	13
246363	06853	146	14
246371	06853	146	20
246372	06853	127	30
246374	06853	127	29
246387	62983	41	13
246632	62983	28	18
	62983	29	11
	62983	30	11
	62983	31	11
246675	06853	146	13
246926	06853	146	11
246927	06853	146	18
248	30014	15	30
	30014	16	7
248609	62983	41	19
248835	62983	41	15
248883	62983	39	16
25000-3	92863	18	10
25021	13841	116	
251108	62983	41	5
252114	9629	41	32
252509	62983	24	6
252515	62983	24	15
252523	62983	24	12
253664	62983	39	18
253665	62983	39	15
25384	13841	21	16
25388	13841	36	7
25392	13841	38	22
255-000-1	92863	18	13
256	30014	13	13
257044	62983	39	27
257045	62983	39	8
257196	62983	23	12
	62983	25	3
	62983	26	3
259871	62983	28	11
261342	62983	22	11
262154	62983	19	25
262711	62983	22	8
262724	62983	22	9
26356-32-32	99103	17	13
263717	62983	19	27
266L	98624	54	18
266112	62983	39	20
266399	62983	39	6
270597	62983	19	10
271632	72582	75	4
271789	62983	19	16
271806	62983	19	13
271811	62983	19	30
273385	62983	39	29
273436	72582	101	27
	72582	101	30
274856	72582	93	12
275672	63977	130	7
275756	06853	112	11
275791	06853	115	1
275969	06853	84	20
276060	06853	82	13
2761	70485	5	43
276462	06853	115	11
276567	06853	115	5
277192	06853	82	10
277262	06853	153	34
277340	06853	112	51
277363	06853	153	23
277831	06853	153	10
277897	06853	115	6
278580	06853	146	21
279097	62983	41	20
279750	06853	127	18
279754	06853	127	49
279755	06853	127	32
279756	06853	127	21
27996	13841	33	17
280031	62983	19	19
280037	06853	127	
280038	06853	127	4
280267	63977	130	14
280372	62983	130	22
280479	06853	112	36
	06853	113	18
280504	06853	153	
280505	06853	153	
280531	06853	153	39
280532	06853	153	39
281923	06853	116	2
281924	06853	116	14
281925	06853	116	3
281926	06853	116	15
282027	62983	28	13
	62983	29	6
	62983	30	6
	62983	31	6
282054	06853	155	20
282055	06853	148	20
	06853	155	20
282076	06853	82	39
282432	06853	146	12
282557	62983	39	14
282775	06853	146	1
282826	06853	146	8
282827	06853	146	15
282971	62983	28	19
	62983	29	12
	62983	30	12
	62983	31	12
283856	62983	28	21
	62983	29	14
	62983	30	14
	62983	31	14
283993	62983	41	18
284154	62983	28	14
	62983	29	7
	62983	30	7
	62983	31	7
284155	62983	28	16
	62983	29	9
	62983	30	9
	62983	31	9
284156	62983	28	17
	62983	29	10
	62983	30	10
	62983	31	10
2853	70485	5	
285408	62983	41	25
286669	62983	28	20
	62983	29	13
	62983	30	13
	62983	31	13
287454	62983	41	16
287458	62983	39	31
2876	13841	42	24
287632	62983	39	17
2877	13841	42	27
2878	9138	40	50
	13841	42	42
289472	62983	19	5
289475	62983	19	20
29E040	13257	10	1
	13257	10	9
	13257	10	17
	13257	10	21
	13257	10	24
	13257	10	27
29E801	72962	144	26
29301	13841	1	9
294266	62983	130	25
294364	62983	39	9
294398	62983	39	30
29556-1	64294	131	5
	64294	131	7
29602-155	64294	131	2

REFERENCE No.	MFG CODE	FIG No.	ITEM No.
29660-1	64294	131	1
29692-018	64294	131	25
2970	23382	55	30
	23382	113	17
	23382	113	58
297178	62983	39	21
29771-116	64294	131	9
29791-018	64294	131	26
3-16-145-140	45681	55	24
3-16-3	94431	132	4
	94431	133	4
3-4-16	94431	132	19
3-8	30014	15	19
3-8-24X1	30014	13	16
3-8X24X1	30014	15	20
3J4	82654	4	60
3K1	82654	4	49
3L11M46	29337	94	28
3L17X1	43334	58	60
3X210	40342	126	18
3X331	40342	126	5
301101	17929	51	10
302060-2-1-2	99103	17	5
30307A-JP	61208	69	2
30322	23382	70	
30349	23382	141	36
30361	23382	117	2
30362	23382	139	14
	23382	143	40
30417	23382	49	21
	23382	141	5
3044	35510	72	41
30494	23382	4	27
3051	13445	8	7A
305870	23382	144	54
305871	23382	144	55
30645	99103	12	63
306919	62983	130	12
307197	62983	23	3
307198	62983	28	3
307502	23382	120	3
30827	23382	144	17
30839	23382	119	7
30847	23382	5	2
30848	23382	5	3
308612	23382	118	48
30907	23382	112	50
	23382	113	47
310100	17929	51	6
310102	17929	51	13
310103	17929	51	11
310109	17929	51	9
310118	17929	51	7
310500	17929	51	8
310517	17929	51	12
310881	23382	118	31
31102	70960	57	8
31117	94431	133	19
31118	94431	133	18
311540	23382	58	123
31201125	45681	132	15
31208	94431	132	2
	94431	133	2
3123361	97532	3	50
3123371	97532	5	49
3123443	97532	5	17
31266	94431	132	21
31268	94431	132	23
31290	13941	54	17
313	08805	121	17
313247	23382	4	18
313868	62983	23	7
3147561	97532	5	16
3148471	97532	5	28
3148481	97532	5	24
3148511	97532	5	19
314912	23382	144	53
315842	23382	141	48
316141	23382	4	18
316608	23382	5	
319396	62983	19	23
319701	62983	23	10

REFERENCE No.	MFG CODE	FIG No.	ITEM No.
319562	69283	23	24
3208	43334	58	38
3209	43334	58	7
32093	94431	134	21
32116	94431	133	21
3214	43334	58	10
321874	23382	4	32
322355	62983	39	28
3224539	72582	73	1
	72582	73	2
32315	94431	134	19
32464	94431	133	17
325450	62983	19	21
325452	62983	19	26
32621	94431	134	27
32662-18	94431	133	11
326581	62983	19	11
326983	62983	19	7
326986	62983	19	8
327009	62983	19	22
327083	23382	4	46
328937	23382	144	37
329092	23382	4	47
329159	23382	4	28
329181	23382	141	50
	23382	141	66
32922	63477	113	24
329258	23382	5	
329397	23382	135	4
329670	23382	121	14
329742	23382	9	12
329759	23382	125	
329760	23382	125	
32977	94431	133	15
329825	23382	4	9
329826	23382	4	8
329850	23382	5	
329867	23382	126	4
33-114	77977	121	22
330643	23382	71	10
330676	23382	144	41
330677	23382	144	43
330678	23382	141	60
330678-1	23382	141	67
330678-2	23382	141	65
330680	23382	144	
330681	23382	144	
330683	9233	144	18
330684	23382	144	25
330687	23382	119	5
330688	23382	4	33
	23382	4	40
330689	23382	4	38
330690	23382	4	23
330691	23382	4	65
330692	23382	4	65
330693	23382	4	39
330694	23382	4	73
330695	23382	52	25
330696	23382	52	26
330697	23382	52	18
330699	23382	49	43
330700	23382	49	52
330702	23382	49	10
330704	23382	49	15
330705	23382	49	14
330707	23382	49	5
330708	23382	5	
330710	23382	143	44
330711	23382	143	44
330712	23382	143	45
330713	23382	143	45
330714	23382	143	15
330715	23382	143	15
330717	23382	141	39
330717-1	23382	141	51
330717-2	23382	141	49
330824	23382	4	37
330840	23382	144	45
330850	23382	4	70
330851	23382	4	69
330877	23382	4	61

CROSS-REFERENCE TO FIGURE AND ITEM NUMBER

Reference No.	Mfg Code	Fig No.	Item No.
330878	23382	4	61
330911	43334	58	27
331233	23382	144	
331234	23382	144	
331266	23382	45	6
331267	23382	45	7
331282	23382	143	70
331283	23382	49	42
331294	23382	45	4
331286	23382	143	69
331287	23382	143	68
331288	23382	143	69
331295	23382	143	22
331299	23382	49	4
331302	23382	143	10
331303	23382	143	67
331314	23382	143	17
331315	23382	49	29
331316	23382	49	25
331421	23382	49	51
331422	23382	45	20
331424	23382	45	15
331426	23382	46	6
331427	23382	46	9
331574	23382	120	16
331575	23382	120	47
331576	23382	120	38
331577	23382	120	29
331578	23382	120	15
331580	23382	120	35
331581	23382	120	25
331582	23382	120	26
331583	23382	120	6
331584	23382	116	27
331602	23382	143	67
331625	23382	120	10
331916	23382	79	8
331984	23382	79	27
332011	23382	45	12
332012	23382	45	12
332014	23382	4	66
332016	23382	119	10
332146	23382	118	43
332157	23382	117	6
332158	23382	2	19
332159	23382	118	39
332160	23382	141	14
332162	23382	118	38
332189	23382	139	17
332190	23382	139	17
332191	23382	139	13
332202	23382	124	6
332206	23382	144	56
332357	23382	143	66
332358	23382	143	66
332367	23382	120	12
332368	23382	120	45
332369	23382	143	61
332383	23382	143	57
332424	23382	82	3
332956	23382	144	34
333435	23382	141	56
333440	23382	140	
333600	23382	49	27
333601	23382	49	22
333610	23382	144	7
333611	23382	144	4
333614	23382	124	14
333707	23382	144	
333708	23382	144	
333710	23382	141	72
333761	23382	143	5
333765	23382	8	3
333827	23382	119	3
333861	23382	118	8
334071	23382	118	27
334072	23382	118	28
334096	23382	45	2
334470	23382	114	3
334480	23382	121	3
334496	23382	71	7
334520	23382	120	46

Reference No.	Mfg Code	Fig No.	Item No.
334599	23382	143	39
334596	23382	118	2
334709	23382	130	4
3425	23382	113	79
34611	73740	135	9
3486	04618	44	
3525V25A17-13CC10	62983	19	
352955	23382	144	35
35376	13841	116	
357205	23382	144	57
3575	13841	20	7
35771	23382	113	33
358332	62983	130	18
359287	62983	130	13
36H	71951	4	15
3608S	57733	113	68
360911	62983	19	35
361	98624	54	13
36143-2-1-2	99103	17	1
36513	23382	63	5
36546	13841	18	9
36582	94431	134	22
36666	23382	45	8
3672	13841	21	1
36760	23382	113	51
3677	13841	40	21
	13841	42	6
36783	23382	55	36
36840	04618	44	
3687	13841	17	8
36895	35510	72	19
	35510	72	52
	35510	72	55
	35510	72	58
3694	13841	17	15
36978	23382	63	2
37102	46529	52	33
3719	24234	4	57
37336	94431	134	8
374AMM224	80201	150	8
	80201	157	8
3778	48170	34	4
37892	09386	145	5
	09386	151	5
38273	16764	78	16
38448	62983	41	8
38905	94431	134	25
38982	94431	133	
39095	94431	150	78
	94431	157	78
39123	94431	134	29
39124	94431	134	28
39127	94431	133	24
3913	62983	39	7
	62983	41	6
39132	94431	133	16
39133	94431	133	23
39134	94431	133	10
39135	94431	133	20
39136	94431	133	22
39137	94431	133	12
3920	10203	17	23
3953	23382	113	26
3957	23382	112	3
	23382	112	44
	23382	113	21
	23382	113	50
3994	23382	8	1
399783	23382	58	73
4-016272	15505	125	12
4-1-2X5AP	30014	16	11
4-1-4	70403	5	
4-10	99103	11	36
4-12	99103	11	8
	99103	12	60
4-12-10	99103	12	47
4-37-2	92985	150	26
	92985	157	26
4-37-6	92985	150	27
	92985	157	27
4-6	99103	12	8R
4C6XS	45681	55	38

CROSS-REFERENCE TO FIGURE AND ITEM NUMBER

Reference No.	Mfg Code	Fig No.	Item No.
4FTX	45681	113	37
4F50XS	45681	55	8
	45681	55	40
4GTX	45681	113	69
4INTE164	72962	58	34
4INTE202	72962	58	1
	72962	58	20
	72962	150	4
	72962	157	4
4KK33N6TS	98259	12	99
4R6BXS	45681	55	41
4S20-20SF60RC20SFR	99103	12	8
4X109	40342	126	6
4X11	40342	126	9
	40342	126	15
4X2453	40342	126	28
4X2454	40342	126	23
4X2462	40342	126	26
4000	23382	114	1
40002051	77640	136	26
4002	23382	58	30
40101	94431	132	
401090	73740	135	18
4011	23382	58	11
	23382	58	39
	23382	58	56
	23382	58	87
	23382	58	104
	23382	71	5
40110	94431	132	26
40112	94431	132	25
40113	94431	132	24
40114	94431	132	10
40115	94431	132	20
40116	94431	132	18
40117	94431	132	12
40118	94431	132	14
402246	77640	136	27
404PQ	36540	58	136
405085	23382	58	94
4077	23382	152	1
4093	23382	144	5
41F	30327	112	22
410614	76680	58	36
4110	23382	120	33
4123331	97532	5	29
4123341	97532	5	51
4123351	97532	5	48
4124	23382	117	5
4152	23382	150	74
	23382	157	74
415368	76680	58	25
4160	23382	144	10
4188	23382	114	8
	23382	121	1
4194	23382	49	39
	23382	49	50
	23382	135	3
	23382	143	9
4200	23382	2	13
	23382	48	2
	23382	49	1
	23382	49	7
	23382	49	16
	23382	49	19
	23382	49	37
	23382	49	47
	23382	50	1
	23382	59	1
	23382	118	32
	23382	120	22
	23382	121	10
	23382	135	1
	23382	139	10
	23382	141	3
	23382	141	40
	23382	141	57
	23382	143	7
	23382	143	11
	23382	143	18
42012AMBER	71951	8	12
42012RED	71951	8	12
4202	23382	5	
	23382	53	1
	23382	79	2
	23382	116	
	23382	118	23
	23382	118	40
	23382	120	7
	23382	120	18
	23382	127	1
	23382	141	11
	23382	141	33
	23382	141	52
	23382	141	58
	23382	143	1
	23382	143	23
	23382	143	58
	23382	144	
4204	23382	58	124
42063213	46922	122	6
4216	23382	119	4
	23382	143	62
4217	23382	5	
	23382	71	21
4220	23382	120	20
4226	23382	150	22
	23382	157	22
42304	24141	5	
4271	23382	152	4
427564	72582	79	10
42955	62983	19	17
4300	23382	10	43
4301	23382	143	30
4308	23382	149	22
	23382	149	33
	23382	156	20
	23382	156	32
4310	23382	144	39
4312	23382	2	3
	23382	2	14
	23382	4	25
	23382	43	2
	23382	44	2
	23382	45	10
	23382	45	14
	23382	48	3
	23382	49	2
	23382	49	8
	23382	49	17
	23382	49	20
	23382	49	31
	23382	50	2
	23382	52	14
	23382	56	2
	23382	59	2
	23382	114	7
	23382	117	3
	23382	120	23
	23382	121	11
	23382	135	2
	23382	139	11
	23382	141	4
	23382	141	58
	23382	143	8
	23382	143	12
	23382	143	19
4313	23382	49	12
	23382	49	45
	23382	51	6
	23382	52	23
	23382	58	12
	23382	58	23
	23382	58	26
	23382	58	40
	23382	59	57
	23382	59	58
	23382	58	105
	23382	65	8
	23382	71	9
	23382	114	2
	23382	115	6
	23382	116	10
	23382	139	15

Reference No.	Mfg Code	Fig No.	Item No.
4313	23382	143	37
	23382	143	41
	23382	144	48
	23382	144	52
4318	09805	6	4
	23382	5	
	23382	53	2
	23382	71	22
	23382	79	3
	23382	116	
	23382	118	24
	23382	118	41
	23382	120	8
	23382	120	19
	23382	126	2
	23382	127	2
	23382	141	12
	23382	141	34
	23382	141	69
	23382	143	24
	23382	143	59
	23382	144	
	23382	149	36
	23382	156	35
4320	23382	151	2
43309	43334	58	112
4335	10203	17	24
4347	41226	4	11
	41226	4	20
	41226	4	26
	41226	49	38
	41226	121	9
	41226	124	13
4356	23382	120	1
	23382	120	27
4381	23382	119	6
4400	23382	49	32
4402	23382	71	6
4405	23382	144	9
	23382	144	20
4438	23382	120	39
444056	72582	82	31
444136	72582	82	29
444567	72582	80	17
444636	72582	101	34
444687	72582	102	19
	72582	102	40
	72582	107	10
	72582	111	44
444692	72582	107	3
444867	72582	80	19
	72582	105	6
445520	72582	93	1
4461	23382	120	2
	23382	120	28
44672E9	09386	147	1
	09386	154	1
4474	23382	153	42
4499R5133	74400	8	5
45ALS24DE19	98349	134	36
45ALS24H838	98349	134	35
45ALS24SP33	98349	134	34
45ALS25HP23	98349	134	33
4500	23382	112	62
4503	23382	116	1
450394	76680	148	24
	76680	155	24
4504	23382	58	137
	23382	150	18
	23382	157	18
450517	72582	79	28
	72582	80	10
450574	76680	149	44
	76680	156	43
450865	72582	76	24
4509	23382	112	17
	23382	113	8
	23382	116	17
4510	23382	63	1
4527	23382	53	17
	23382	55	3
453	98624	54	15
453285	16764	78	3
453297	16764	77	4
	16764	77	44
	16764	78	5
4538	23382	112	20
454813	72582	88	8
	72582	88	11
457193	72582	82	43
45786E	38905	8	7
4621	02129	59	82
46342	23382	57	12
4640	23382	120	24
46501	71951	4	14
4653	23382	4	12
	23382	49	33
4676	23382	144	32
4700	23382	45	9
	23382	45	17
4715	73460	119	9
47200	95879	150	72
	95879	157	72
4721P6	13445	125	
47640	70270	147	5
	70270	154	5
	95879	149	29
	95879	156	29
477167	73740	135	14
48220	08162	147	40
	08162	154	40
48290	08162	147	26
	08162	154	26
48320	60038	150	47
	60038	157	47
48393	60038	150	48
	60038	157	48
49TU246	72962	34	12
	72962	35	5
5-16	94431	133	9
5-16-18-3-4	94431	133	8
5-16-18X1	30014	15	33
5-8-18X2-1-4	30014	15	23
5-8JMS	70434	129	25
58TX	45681	129	31
50S00-1350	73740	135	22
5HTX	45681	129	13
5LA2-1-2-75-10	92863	18	12
5000-334	79136	58	6
50027	76680	58	32
	76680	58	130
502FQ	36540	147	3
	36540	154	3
5038	57733	124	8
503PQ	36540	147	4
	36540	150	71
	36540	154	4
	36540	157	71
5042	36251	133	3
	36251	134	1
	70960	135	42
50519S	76680	156	3
50551S	76680	58	8
5067-5240FWD144712	72582	73	
507P24V	57733	54	20
5099	13941	40	31
	13941	42	19
51	74928	141	32
51-36-13	46522	122	6
51X402	40342	126	24
5100-40	79136	127	50
5100-62	79136	127	33
5100004	72582	89	9
5100104	72582	95	2
5100201	72582	79	24
510262	72582	75	1
5108219	72582	79	21
5108381	72582	111	
5108434	72582	79	9
5108436	72582	79	12
5108474	72582	95	1
5108868	72582	79	14
5108918	72582	103	8
5108919	72582	103	7

5109116	72582	92	14
5109640	72582	79	32
5109771	72582	90	10
5110070	72582	73	9
5111	13841	40	14
	13841	40	54
	13841	42	46
5111467	72582	103	22
5111904	72582	101	31
5112241	72582	73	5
5112899	72582	107	7
5112971	72582	101	32
5113359	72582	95	16
5113633	72582	101	23
5113800	72582	81	11
5114727	72582	101	24
5114974	72582	101	25
5115087	72582	103	17
5115214	72582	90	20
	72582	90	32
	72582	111	46
5115322	72582	96	8
5116009	72582	92	
5116011	72582	92	42
5116070	72582	105	10
5116071	72582	92	52
5116072	72582	103	3
5116120	72582	107	18
5116122	72582	111	5
5116125	72582	103	16
5116128	72582	103	2
5116164	72582	102	36
5116165	72582	102	36
5116166	72582	102	36
5116167	72582	102	36
5116168	72582	102	37
5116170	72582	102	16
5116181	72582	108	5
	72582	108	10
5116189	72582	108	2
5116195	72582	109	5
5116198	72582	110	11
5116201	72582	108	4
5116204	72582	95	10
5116205	72582	94	5
5116224	72582	105	7
5116229-8	72582	91	15
5116242	72582	74	43
	72582	80	34
	72582	107	6
5116262	72588	107	14
5116264	72582	96	5
	72582	96	17
5116265	72582	96	6
5116290	72582	111	3
5116292	72582	111	1
5116341	72582	103	19
5116357	72582	100	14
	72582	111	18
5116361	72582	107	21
5116378	72582	90	13
5116401	72582	109	2
5116418	72582	90	15
5116440	72582	73	11
5116476	72582	104	5
5117061	72582	19	40
	72582	130	31
5117693	72587	92	27
5117933	72582	92	21
5118219	72582	96	1
5119189	72582	75	6
5119198	72582	103	1
5119218	72582	111	48
5119282	72582	81	10
5119283	72582	81	9
5119285	72582	90	12
5119293	72582	107	15
5119314	72582	92	51
5119368	72582	105	5
5119393	72582	102	20
5119394	72582	102	9
5119395	72582	102	8

5119411	72582	102	24
5119412	72582	102	25
5119429	72582	102	10
5119433	72582	102	11
5119438	72582	102	3
5119457	72582	95	5
5119466	72582	102	23
5120740	72582	76	19
5121	13841	38	11
5121052	72582	111	33
5121071	72582	110	4
5121077	72582	110	12
5121109	72582	110	2
5121142	72582	107	12
5121207	72582	111	4
5121254	72582	111	2
5121256	72582	108	16
5121259	72582	97	3
5121263	72582	107	1
5121329	72582	102	4
5121336	72582	102	30
5121337	72582	92	8
5121339	72582	92	44
5121342	72582	92	24
5121343	72582	90	6
5121344	72582	90	7
5121345	72582	92	1
5121353	72582	101	32
5121359	72582	90	4
5121443	72582	98	
5121452	72582	96	25
5121458	72582	92	39
5121459	72582	111	12
5121472	72582	96	23
5121479	72582	81	4
5121480	72582	92	32
5122437	72582	80	5
5122610	72582	101	7
5122623	72582	101	28
5122775	72582	92	12
5122796	72582	92	11
5122883	72582	92	7
5122992	72582	79	37
5123118	72582	85	12
5123250	72582	103	6
5123329	72582	103	21
5123330	72582	103	20
5123802	72582	111	4
5123918	72582	111	17
5124055	72582	104	3
5124209	72582	92	34
5124458	72582	106	3
5124752	72582	75	11
5124775	72582	90	33
5124872	72582	80	29
5124877	72582	80	7
5124997	72582	80	28
5125023	72582	80	18
5125024	72582	90	24
5125150	72582	80	13
5125237	72582	107	11
5125355	72582	95	3
5125367	72582	92	9
5125447	72582	73	24
5125488	72582	95	3
5125491	72582	130	34
5125608	72582	111	38
5125716	72582	88	1
5125768	72582	87	7
5125771	72582	87	[illegible]
5125774	72582	87	[illegible]
5125775	72582	87	2
5125867	72582	80	14
5125868	72582	80	23
5126060	72582	93	21
5126069	72582	92	17
5126072	72582	92	4
5126073	72582	92	25
5126120	72582	93	16
5126121	72582	93	4
5126143	72582	94	3
5126194	72582	111	11

Section IV. INDEX-FEDERAL STOCK NUMBER AND REFERENCE NUMBER CROSS-REFERENCE TO FIGURE AND ITEM NUMBER

Reference No.	Mfg Code	Fig No.	Item No.
5126236	72582	102	33
5126237	72582	102	28
5126436	72582	105	17
5126473	72582	99	9
5126541	72582	92	16
5126645	72582	92	23
5126671	72582	91	2
5126672	72582	87	4
5126792	72582	92	14
5126896	72582	98	
5126933	72582	110	14
5126934	72582	110	14
5127077	72582	102	15
5127131	72582	71	15
5127214	72582	101	35
5127247	72582	101	6
5127397	72582	93	5
5127591	72582	92	22
5127949	72582	95	8
5127963	72582	102	5
5128014	72582	94	4
5128016	72582	73	10
5128026	72582	104	6
5128340	72582	80	25
5128492-3	72582	80	3
5128493-5	72582	80	4
5128599	72582	102	34
5128600	72582	102	35
5128640	72582	103	10
5129019	72582	107	5
5129168	72582	90	18
5129232	72582	73	19
5129240	72582	73	16
5129242	72582	73	20
5129243	52582	74	41
5129677	72582	98	8
5129705	72582	92	5
5129706	72582	92	5
5129711	72582	111	
5129912	72582	96	21
5129913	72582	96	19
5130029	72582	79	23
5130142	72582	101	18
5130590	72582	111	22
5130860	72582	73	12
5130959	72582	81	12
5131095	72582	79	19
5131122	72582	79	20
5131123	72582	79	16
5131124	72582	79	18
5131205	72582	79	18
5131206	72582	79	18
5131207	72582	79	13
5131313	72582	130	32
5131913	72582	102	2
5131961	72582	107	20
5131973	72582	107	19
5132282	72582	91	16
5132504	72582	106	2
5132695	72582	111	36
5132803	72582	108	15
5132923	72582	102	1
5132934	72582	88	14
5133	74400	8	6
5133026	72582	88	13
5133101	72582	108	14
5133107	72582	81	3
5133109	72582	108	
51331332	72582	130	30
5133177	72582	79	33
5133263	72582	76	23
5133387	72582	110	8
5133388	72582	110	8
5133397	72582	111	13
5133431	72582	76	27
5133503	72582	91	3
5133707	72582	92	13
5133775	72582	82	16
5133981	72582	111	39
5134051	72582	88	3
5134179	72582	102	13
5134269	72582	80	27
5134304	72582	76	
5134388	72582	110	
5134456	72582	76	
5134476	72582	88	
5134477	72582	76	
5134716	72582	86	
5134753	72582	111	
5134913	72582	102	
5134915	72582	102	
5134916	72582	102	
5134924	72582	102	
	72582	102	
5135079	72582	109	
5135227	72582	106	
5135267	72582	103	
5135269	72582	103	
5135308	72582	53	
5135308NO	72582	74	
513546	72582	96	
5135518	72582	100	
5135565	72582	100	
5135638	72582	80	
5135820	72582	85	
5135935	72582	85	
5135936	72582	85	
5135945	72582	85	
5136227	72582	105	
5136274	72582	105	
5136590	72582	93	
5136591	72582	93	
5136610	72582	107	
5137276	72582	93	
5137470	72582	91	
5137595	72582	109	
5137620	72582	94	
5137651	72582	76	
5137659	72582	76	
5138244	72582	99	
5138259	72582	99	
5138619	72582	99	
5138707	72582	89	
5139114	72582	102	
5140689	72582	111	
5141263	72582	111	
5141701	72582	111	
5143021	72582	105	
5143439	72582	101	
5143564	72582	93	
5143616	72582	130	
5144503	72582	81	
5144685	72582	81	
	72582	81	
5145009	72582	81	
5145230	72582	80	
514555398	22337	145	
	22337	151	
5150041	72582	107	
5150087	72582	110	
	72582	110	
5150130	72582	111	
5150140	72582	108	
5150155	72582	100	
5150193	72582	86	
5150199	72582	86	
5150250	72582	97	
5150259	72582	96	
5150263	72582	96	
5150303	72582	103	
5150568	72582	85	
	72582	130	
5150829	72582	104	
5150898	72582	92	
5150941	72582	92	
5150942	72582	92	
5150943	72582	92	
	72582	92	
5151272	72582	103	
5151449	72582	107	
5151487	72582	92	
5151519	72582	111	
5151601	72582	103	
5152138	72582	95	

5152462	72582	95	12
5152904	72582	90	16
	72582	74	42
	72582	91	12
5152932	72582	93	15
5152938	72582	93	4
5152944	72582	93	3
5153060	72582	92	18
5154215	72582	100	8
5154453	72582	107	9
5154538	72582	76	13
5155854	72582	85	13
5157244	72582	106	1
5157933	72582	104	8
5158432	72582	89	14
5159353	72582	109	4
5160037	72582	100	17
5163924	72582	100	2
5164294	72582	90	4
5165	13841	35	30
	13841	44	13
5166864	72582	75	8
5168001	72582	111	30
5168688	72582	130	35
5170452	72582	75	7
5170503	72582	95	4
5171045	72582	88	15
51727	23382	58	95
5172734	72582	110	6
51728	23382	58	86
5173189	72582	111	31
5173871	72582	79	5
5174429	72582	92	17
5176228	72582	96	7
5176557	72582	92	20
	72582	93	16
5176810	72582	101	9
5177026	72582	130	36
5177773	72582	105	16
5178860	72582	101	14
5179102	72582	93	20
5179112	72582	88	10
5179121	72582	111	25
5179936	72582	73	23
5179937	72582	73	14
	72582	73	18
	72582	73	22
5179938	72582	73	13
	72582	73	17
	72582	73	21
5179954	72582	103	13
5179969	72582	73	25
	72582	73	26
5180250	72582	108	6
5180291	72582	75	5
5180323	72582	102	27
5182977	72582	101	29
5183184	72582	111	23
5183701	72582	92	14
5185416	72582	111	24
5185519	72582	73	27
5185605	72582	92	45
5186840	72582	80	6
5186841	72582	100	1
5187308	72582	76	16
5187309	72582	76	15
5187310	72582	76	14
5189273	72582	94	3
5188274	72582	111	10
5188755	72582	130	3
5195685	72582	105	12
5195687	72582	105	13
5195931	72582	108	3
5196061	72582	98	9
5196614	72582	102	26
5196784	72582	96	12
5196786	72582	96	13
5196793	72582	106	5
5196821	72582	111	37
5196842	72582	87	8
5197151	72582	92	19

5197852	72582	108	6
5197544	72582	111	42
5197975	72582	108	12
5198147	72582	111	41
5198203	72582	107	8
5198410	72582	109	1
5198552	72582	109	8
5198822	72582	108	1
5199323	72582	103	18
52-062-312-1250	72962	58	75
52E242	72962	137	8
	72962	139	1
52E80	72962	58	64
520880	29783	43	25
5226186	72582	97	5
5226400	72582	97	26
5226411	72582	97	12
5226413	72582	97	4
5226415	72582	97	6
5226416	72582	97	29
5226564	72582	97	9
5226567	72582	97	25
5226719	72582	97	27
5227210	72582	97	17
5227318	72582	97	18
5228013	72582	97	7
5228102	72582	97	8
5228104	72582	97	21
5228106	72582	97	14
5228109	72582	97	10
5228126	72582	97	23
5228294	72582	97	19
5228308	72582	97	15
5228313	72582	97	16
5228316	72582	97	13
5228473	72582	97	11
5228539	72582	97	28
5228550	72582	97	
5228559	72582	97	30
5228608	72582	97	20
5228739	72582	97	22
52400	60038	150	50
	60038	157	50
52525EM	22337	151	11
52618	60038	150	49
	60038	157	49
5284	13841	38	31
5288	35510	72	37
53-10	99103	27	18
53-12	99103	27	20
53-16	99103	22	14
	99103	22	17
531	98624	54	19
5315X6	79470	14	21
5315X8	79470	15	9
531740	23382	4	71
5405X6X6	79470	14	22
5405X8X8	79470	15	10
54301	13841	12	7
54302	13841	12	9
54303	13841	12	10
54304	13841	12	11
54305	13841	11	4
54306	13841	12	84
54307	13841	11	2
54308	13841	11	3
54309	13841	11	1
54310	13841	12	85
54311	13841	12	75
54312	13841	12	74
54313	13841	12	77
54314	13841	12	76
54315	13841	12	79
54316	13841	12	78
54318	13841	12	26
54319	13841	12	23
54320	13841	12	70
54321	13841	12	67
54322	13841	12	66
54323	13841	12	54
54324	13841	12	69

CROSS-REFERENCE TO FIGURE AND ITEM NUMBER

Reference No.	Mfg Code	Fig No.	Item No.
54325	13841	12	55
54326	13841	12	71
54327	13841	12	68
54328	13841	12	59
54329	13841	12	58
54330	13841	12	56
54331	13841	12	57
54332	13841	12	30
54333	13841	12	29
54334	13841	12	31
54335	13841	12	32
54336	13841	12	86
54337	13841	12	87
54338	13841	12	93
54339	13841	12	89
54340	13841	12	90
54341	13841	12	94
54342	13841	12	91
54343	13841	12	96
54344	13841	12	92
54345	13841	12	97
54346	13841	12	34
54347	13841	12	35
54348	13841	12	37
54349	13841	12	36
54350	13841	12	42
54351	13841	12	43
54352	13841	12	44
54353	13841	12	45
54354	13841	12	38
54355	13841	12	41
54356	13841	12	40
54357	13841	12	39
54358	13841	12	3
54359	13841	12	2
54360	13841	12	27
54361	13841	12	20
54362	13841	12	14
54363	13841	12	16
54364	13841	12	17
54365	13841	12	15
54366	13841	11	12
54367	13841	11	6
54368	13841	11	7
54369	13841	11	18
54370	13841	11	32
54371	13841	11	31
54372	13841	11	30
54373	13841	11	34
54374	13841	11	33
54375	13841	11	44
54376	13841	12	21
54377	13841	11	9
54378	13841	11	10
54379	13841	11	29
54380	13841	11	28
54381	13841	11	20
54396	13841	22	15
54398	13841	22	19
54421	13841	27	17
54422	13841	27	16
54423	13841	27	19
547002	00000	113	60
55083-212-2	98625	129	1
55121453	72582	96	24
5555-372F	79136	5	26
5571024	72582	76	10
5573014	72582	76	9
5574008	72582	76	19
5574118	72582	74	27
5574120	72582	74	14
	72582	74	34
5574122	72582	74	17
	72582	74	37
5574123	72582	74	15
	72582	74	35
5574124	72582	74	18
	72582	74	38
5574126	72582	74	16
	72582	74	36
5574161	72582	74	11
	72582	74	31

Reference No.	Mfg Code	Fig No.	Item No.
5574508	72582	74	30
5574533	72582	74	
5575032	72582	74	10
5575169	72582	74	33
5575853	72582	74	13
55770	35510	72	36
567-27	71843	142	3
57026	23382	144	46
57320	23382	141	9
	23382	141	30
576366-5110	92363	18	11
58242	35510	72	45
58243	35510	72	46
5847	23382	79	4
5856	23382	71	23
5864	23382	62	27
5957	23382	149	10
	23382	156	10
6PL4	91929	120	43
60000G1	46522	122	7
60008	35510	72	7
60020	35510	72	6
60022	35510	72	27
60023	35510	72	1
60028	35510	72	56
60050	35510	72	62
60057	35510	72	50
60060	35510	72	43
60061	35510	72	36
60076G8	46522	122	
60087	35510	72	2
6010J	52676	58	115
	52676	58	120
60136	35510	71	26
60142	35510	72	12
60143	35510	72	11
60144	35510	72	14
60145	35510	72	13
60173	35510	72	28
60174	35510	72	20
60177	35510	72	5
60183	35510	72	64
60184	35510	72	53
60196	35510	72	29
	35510	72	33
60191	35510	72	16
60196	35510	72	25
60198	35510	72	30
60199	35510	72	8
60202	35510	72	24
60206	35510	72	35
60217	35510	72	60
60225	35510	72	15
60231	35510	72	46
60232	35510	72	47
60238	35510	72	59
60245	35510	72	49
60249	35510	72	26
60252	35510	72	34
60253	35510	72	22
60254	35510	72	23
60255	35510	72	31
60262	35510	72	32
60263	35510	72	10
60265	35510	72	42
60272	35510	72	9
60455G1-2	46522	122	3
60526G1	46522	122	4
60527G1-2	46522	122	10
60529G3	46522	122	8
60600G1	46522	122	2
6079	23382	150	77
	23382	157	77
60828G1	46522	122	9
610495	76110	5	33
611-9	72902	133	13
6121001	72582	92	35
6131	23382	4	60
	23382	5	
618-750-24	71724	147	37
	71724	154	37
62-10	99103	12	49

Reference No.	Mfg Code	Fig No.	Item No.
62-12	99103	11	22
62-12-10	99103	11	14
62-16	99103	11	40
	99103	12	81
62-4	99103	11	26
62-6	99103	12	98
62-6-10	99103	12	51
62-6-8	99103	12	64
62020-5110	92863	56	7
64-032-473	70436	5	
64-20	99103	12	33
64-6	99103	11	24
6401095	70040	125	1
6435793	72582	74	8
6435794	72582	74	9
6435974	72582	74	7
6435875	72582	74	
6436254	72582	74	26
6437298	72582	76	17
64480	23382	52	12
64574	23382	52	6
	23382	52	7
64601	23382	52	2
	23382	52	3
6487	23382	49	49
	23382	118	36
6488	23382	144	
6489	23382	143	64
	23382	144	30
6515	23382	53	13
	23382	112	18
	23382	113	13
6565	23382	55	35
6567	23382	76	6
6568	23382	113	40
	23382	113	62
6569	23382	113	78
6570	23382	53	14
6572	23382	113	67
	23382	113	73
6575	23382	112	43
6577	23382	112	58
	23382	113	29
66-10-12	99103	11	37
66-12	99103	12	50
66-12-10	99103	11	15
	99103	11	27
	99103	12	62
66-20-16	99103	12	82
66-4-6	99103	11	23
	99103	11	39
668SC	57733	124	9
6782	23382	58	17
	23382	58	93
6911-1506	94894	140	1
6933	13941	33	16
6961	23382	4	54
	23382	4	62
	23382	5	
	23382	49	34
	23382	52	19
	23382	120	17
	23382	141	44
	23382	141	61
6977	23382	59	3
6984	23382	55	27
6996	23382	112	49
6997	23382	112	57
7-1-2AMP	77977	121	23
7-8-14X3	30014	13	6
702333	23382	144	29
7064400	00000	113	66
7074	62983	23	25
7076	62983	29	20
7077	63977	130	8
71-10	99103	12	48
71-12	99103	11	13
71-16	99103	12	80
719FS01-2X1-4	30327	55	43
72NF27X	70960	57	13
72NLS32-55	70960	57	10
72NYSM32-131	70960	57	5
72NYS24-13X	70960	57	12
72NYS28-63X	70960	57	12
72NYS32-111X	70960	57	12
72N02	70960	57	7
72N13	70960	57	9
72200C	60038	150	11
	60038	157	11
72487	60038	157	12
73-12-12-16	99103	11	21
7320532	00000	141	15
73945	76580	149	43
73945	76580	156	42
7425	23382	113	20
	23382	113	25
74283	23382	124	16
74285	23382	124	15
74286	23382	124	17
7434	23382	63	6
7435	23382	55	28
7446	23382	63	3
	23382	63	7
7450630	72582	79	22
7451080	72582	79	17
74629	35510	72	21
7500	02697	17	30
750009	57733	49	40
750506	57733	49	41
75059	23382	149	5
	23382	156	5
750781	23382	149	20
751538	23382	149	24
	23382	156	23
751539	23382	149	24
	23382	156	23
751540	23382	149	24
	23382	156	23
752379	23382	148	5
	23382	148	12
	23382	155	5
	23382	155	12
752386	23382	148	19
	23382	155	19
752387	23382	148	25
	23382	155	25
752389	23382	148	18
	23382	155	18
753230	23382	150	39
	23382	157	39
753231	23382	150	38
	23382	157	38
753234	23382	150	61
	23382	157	61
753251	23382	150	64
	23382	157	64
7533853	19207	112	39
7539501	00000	141	37
754011	23382	150	5
	23382	157	5
754341	23382	149	7
	23382	156	7
754342	23382	149	6
	23382	156	6
754447	23382	58	35
754449	23382	58	49
754450	23382	58	50
754456	23382	59	47
75444	35510	72	54
	35510	72	57
75448	35510	72	51
754904	23382	149	14
	23382	156	14
755438	23382	150	13
	23382	157	13
755575	23382	150	62
	23382	157	62
7556	23382	143	2
755834	23382	150	60
	23382	157	60
755835	23382	150	63
	23382	157	63
756369	23382	148	6
	23382	148	13

Section IV. INDEX-FEDERAL STOCK NUMBER AND REFERENCE NUMBER CROSS-REFERENCE TO FIGURE AND ITEM NUMBER

Reference No.	Mfg Code	Fig No.	Item No.
756369	23382	155	6
	23382	155	13
756413	23382	148	3
	23382	155	3
756539	23382	150	24
	23382	157	24
756860	23382	149	11
	23382	156	11
757129	23382	152	21
757138	23382	150	69
757143	23382	150	70
757200	23382	150	68
757297	23382	147	29
	23382	154	29
757305	23382	147	9
	23382	154	9
757313	23382	150	43
	23382	157	43
757331	23382	149	46
	23382	156	45
757332	23382	149	46
	23382	156	45
757333	23382	148	28
	23382	155	28
757341	23382	148	29
	23382	155	29
757356	23382	149	39
	23382	156	38
757357	23382	149	37
	23382	156	36
757361	23382	148	23
	23382	155	23
757362	23382	148	22
	23382	155	22
757363	23382	148	21
	23382	155	21
757364	23382	148	21
	23382	155	21
757368	23382	149	18
757371	23382	156	22
757799	23382	148	1
	23382	155	1
757826	23382	150	14
	23382	157	14
757827	23382	150	15
	23382	157	15
757828	23382	150	16
	23382	157	16
757831	23382	150	53
	23382	157	53
757832	23382	150	54
	23382	157	54
757833	23382	150	45
	23382	157	45
757834	23382	150	46
	23382	157	46
757835	23382	150	67
	23382	157	67
757836	23382	150	59
	23382	157	59
757863	23382	147	25
	23382	154	25
757868	23382	147	12
	23382	154	12
757871	23382	147	19
	23382	154	19
757873	23382	147	13
	23382	154	13
757874	23382	147	10
	23382	154	10
757920	23382	150	28
	23382	157	28
757921	23382	150	31
	23382	157	31
757922	23382	150	35
	23382	157	35
757923	23382	150	37
	23382	157	37
757924	23382	150	40
	23382	157	40
757925	23382	150	25
	23382	157	25

Reference No.	Mfg Code	Fig No.	Item No.
757926	23382	150	44
	23382	157	44
757927	23382	157	68
757928	23382	157	69
757929	23382	157	70
757938	23382	150	[illegible]
	23382	157	[illegible]
757979	23382	150	[illegible]
758055	23382	147	3[illegible]
	23382	154	3[illegible]
758144	23382	150	5[illegible]
	23382	157	5[illegible]
758145	23382	150	5[illegible]
	23382	157	5[illegible]
758162	23382	147	[illegible]
	23382	154	[illegible]
758186	23382	157	
758695	23382	148	1[illegible]
	23382	155	1[illegible]
758697	23382	147	4[illegible]
	23382	154	4[illegible]
758701	23382	149	
	23382	156	
758702	23382	149	
	23382	156	
758704	23382	149	
	23382	156	
758705	23382	147	2[illegible]
	23382	154	2[illegible]
758708	23382	147	2[illegible]
	23382	154	2[illegible]
758710	23382	147	1[illegible]
	23382	154	1[illegible]
758711	23382	147	2[illegible]
	23382	154	2[illegible]
758712	23382	147	2[illegible]
	23382	154	2[illegible]
758731	23382	148	1[illegible]
	23382	155	1[illegible]
758753	23382	147	
	23382	154	
758754	23382	147	
	23382	154	
758775	23382	156	
758776	23382	149	
	23382	156	
758777	23382	150	
758778	23382	157	
758784	23382	153	
758785	23382	153	
758796	23382	149	
	23382	156	
758807	23382	148	
	23382	155	
758809	23382	148	
	23382	155	
758882	23382	149	
	23382	156	
758884	23382	147	
	23382	154	
758889	23382	147	
	23382	154	
758891	23382	147	
	23382	154	
758892	23382	147	
	23382	154	
758997	23382	149	
	23382	156	
759004	23382	150	
	23382	157	
759204	23382	149	
759336	23382	146	26
759337	23382	146	
759385	23382	149	
	23382	156	
7729732	19207	141	
773L03	43334	36	
7731428	00000	141	
7810	24234	5	
78778-11NS	60703	2	
79445	23382	58	
7951827	19207	46	

Reference No.	Mfg Code	Fig No.	Item No.
7969299	00000	49	6
	00000	141	47
	00000	141	54
8-10JMS	70434	129	19
8-229	94431	132	17
8-230N300-9	45681	150	33
	45681	157	33
8-234N300-9	03818	133	14
8-246N300-9	45681	150	29
	45681	157	29
8-4CTXS	45681	53	16
6-8CTX	45681	76	5
8AEDGS	45681	55	39
8C50XS	45681	129	36
8C6XS	45681	55	18
	45681	129	16
8FLW1307	61208	59	
8FNTX	45681	129	9
8F50XF	45681	55	37
8F50XS	45681	129	38
8GTXS	45681	53	9
8HTXS	45681	129	33
8S50XS	45681	129	26
8S6XS	45681	129	10
8WETX	45681	129	37
804000	23382	59	55
804001	23382	59	48
	23382	58	51
804006	23382	58	53
804019	23382	58	46A
	23382	150	20
	23382	157	20
804198	23382	58	71
	23382	58	77
804244	23382	58	52
804249	23382	58	72
804333	23382	58	79
804535	23382	58	14
804536	23382	58	15
804537	23382	58	107
804538	23382	58	108
804589	23382	58	58
804704	23382	58	134
804742	23382	58	63
804754	23382	58	45
804755	23382	58	41
804759	23382	58	127
804762	23382	58	128
804765	23382	59	113
804768	23382	58	111
804769	23382	58	116
	23382	58	121
804770	23382	58	13
804792	23382	58	129
804794	23382	58	118
804795	23382	58	24
804809	23382	58	103
804813	23382	58	102
804815	23382	58	18
804838	23382	58	66
804839	23382	58	68
804850	23382	58	81
804857	23382	58	100
805084	23382	58	83
805086	23382	58	89
805087	23382	58	114
805089	23382	58	119
805091	23382	59	5
805214	23382	58	31
805215	23382	58	138
805216	23382	58	99
805217	23382	58	101
805226	23382	58	125
805232	23382	58	106
82-12-12	99103	11	11
836042-31	77640	136	1
8376500	19207	123	1
339103	72582	108	8
34	98624	54	6
34-10-10	99103	11	38
34575	23382	58	98
14591	23382	120	30

Reference No.	Mfg Code	Fig No.	Item No.
851160-15	92863	56	4
851160-4	92863	56	6
851162-1	92863	56	8
8514600	72582	100	9
85686	23382	4	52
8575	98298	17	22
8576016	97532	5	
85830	23382	51	3
86	98624	54	7
8604	13841	15	1
8607	13841	34	1
86913	60703	2	5
8710630	19207	142	4
87223-1	60703	2	7
8729	13841	10	31
	13841	10	35
87342	23382	117	7
8747987	00000	9	3
87900-20	60703	2	1
88164M2	80252	125	6
88837	23382	134	30
88965J	60703	2	18
90-10332-100	63477	128	9
	63477	129	12
90-10332-200	63477	128	5
90-10629-100	63477	128	4
	63477	128	8
90-14404-300	63477	128	17
90-17983-900	63477	128	11
9001	13445	123	23
9020435233	70960	135	28
9022735233	70960	135	39
904827	72582	81	13
907674	72582	90	17
9085	13841	10	30
	13841	10	34
909020-2000	92863	18	5
922700	62983	19	24
922710	62983	19	9
923257	62983	19	
923478	62983	130	17
92504	23382	52	30
93247	23382	58	42
934478	16764	77	48
9409010	72582	99	1
9409023	72582	102	32
9409028	72582	110	10
9409034	72582	102	14
9409060	72582	79	15
9409073	72582	97	1
9409079	72582	107	2
9409126	72582	91	4
9409203	72582	87	3
9409219	72582	102	29
940942	72582	102	12
9411504	72582	92	10
9411765	72582	90	11
9412018	72582	91	1
9412305	16764	77	23
9414215	72582	91	6
9414397	16764	77	37
9414523	72582	111	34
9414569	72582	92	25
9415235	16764	77	16
	16764	77	24
9417025	72582	92	48
9417096	16764	78	9
9418228	72582	77	1
9418923	72582	98	8
941952	62983	41	9
9419725	16764	78	1
9420604	72582	102	31
9421423	16764	77	32
	16764	77	41
9421427	16764	77	5
9421917	72582	92	37
95BLACK	80813	27	6
95RED	80813	27	7
95OFDS	71951	4	13
95OSTAMBER	71951	8	11
95OSTRED	71951	8	11
951	71951	4	17

CROSS-REFERENCE TO FIGURE AND ITEM NUMBER

Reference No.	Mfg Code	Fig No.	Item No.
9545535228	70960	57	5
9545535229	70960	57	5
9549235228	70960	57	
9549235229	70960	57	
954987	1-382	92	47
959-11	45681	132	11
96168	62983	130	6
9645	23382	112	24
97033	23382	152	20
98574	63977	130	21
99-90787-000	63477	128	15
99907	62983	39	11

2520-410-4449	14
2590-191-0804	14
2990-089-7780	16
4730-741-2917	22
	23
4820-925-0076	17
5305-225-3843	16
5305-272-5552	02
5305-282-4209	17
5305-531-2030	02
5305-637-4639	17
5305-984-6193	02
5306-225-9089	02
	17
	21
5310-189-1825	17
5310-193-7491	17
5310-515-9962	17
5310-582-5965	16
5310-531-0525	17
5310-660-2649	17
5310-777-5399	21
5325-954-3828	02
5330-832-8569	17
5355-413-0145	17
5935-846-3884	18
5940-942-2848	18
5940-944-5017	08
6140-057-2554	21

Reference No.	Mfg. Code	Group No.
B125	83008	08
CR134-5-45	79960	02
C1353	82484	17
FFW84	81348	17
F549	82484	17
G98009	46529	10
H1218	95406	02
MS35000-3	96906	21
MS35206-245	96906	02
MS35690-424	96906	17
MS40726-34	96906	02
		17
		21
MS40726-46	96906	02
MS75021-2	96906	18
MS90728-8	96906	16
TOLC22-420-2	61208	14
T8S8-7	79960	02
UA1481	61208	14
US1908	61208	14
UA1908A	61208	14
UA4850	61208	14
XS51020	90763	02
10-5323	04700	08
1208	78189	02
1317-4	30014	05
134158	23382	02
135079	23382	18
136846	23382	18
136847	23382	18
136848	23382	18
136849	23382	18
136850	23382	18
136855	23382	18
136856	19207	18
136857	23382	18
136858	23382	18
136859	23382	18
136860	23382	18
136861	23382	18
136998	23382	18
161515	23382	18
164604	23382	02
1888135	16764	02
1903711	16764	02
1911	23382	02
1940	57733	22
		23

Reference No.	Mfg. Code	Group No.
199277	23382	14
201902	23382	02
21799	13841	08
240011	06853	17
242837	06853	17
25021	13841	17
278824	06853	17
279579	06853	17
2853	70485	02
30322	23382	14
316608	23382	02
329258	23382	02
329759	23382	18
329760	23382	18
329850	23382	02
330680	23382	21
330681	23382	21
330708	23382	02
331233	23382	21
331234	23382	21
333707	23382	21
333708	23382	21
3486	04618	08
35376	13841	17
36840	04618	08
4-1-4	70403	02
4202	23382	02
		17
4217	23382	21
4230A	24161	02
4318	23382	02
		02
		17
4350	23382	21
4721P6	13445	02
5108381	72582	18
5129711	72582	16
5151519	72582	16
5281907	77060	16
54402R	77060	18
6131	23382	18
64-032-473	70436	02
6488	23382	02
6961	23382	21
7810	24234	02

W. C. WESTMORELAND,
General, United States Arm
Chief of Staff.

Official:

VERNE L. BOWERS,
Major General, United States Army,
The Adjutant General.

Distribution:

To be distributed in accordance with DA Form 12-25B, (qty rqr block No. 919) direct and g
support maintenance requirements for Cranes: Wheel Mounted.

☆ U.S. GOVERNMENT PRINTING OFFICE : 1989 O - 242-451 (61